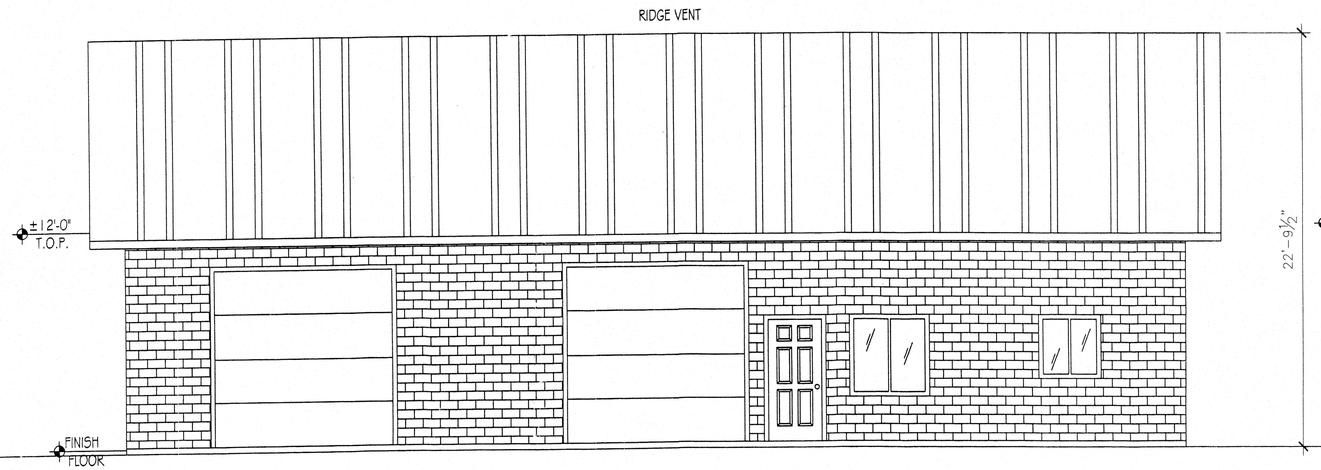


## FRONT ELEVATION

1/4"=1'-0"

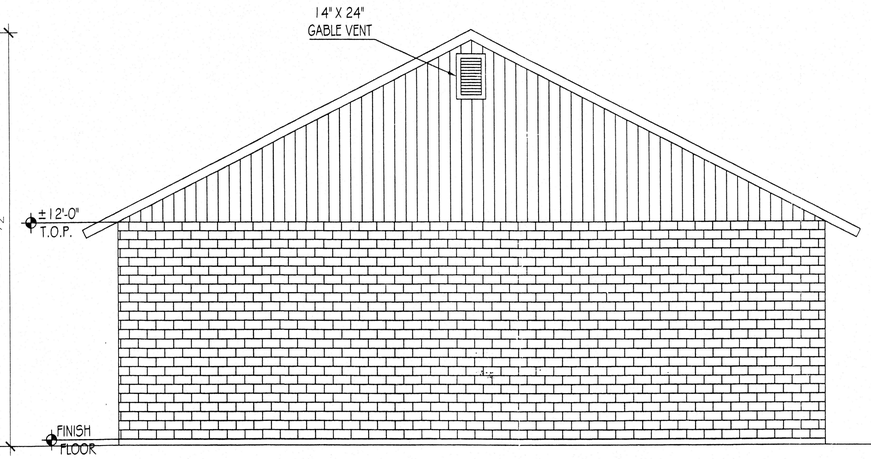


## FRONT ELEVATION

1/4"=1'-0"

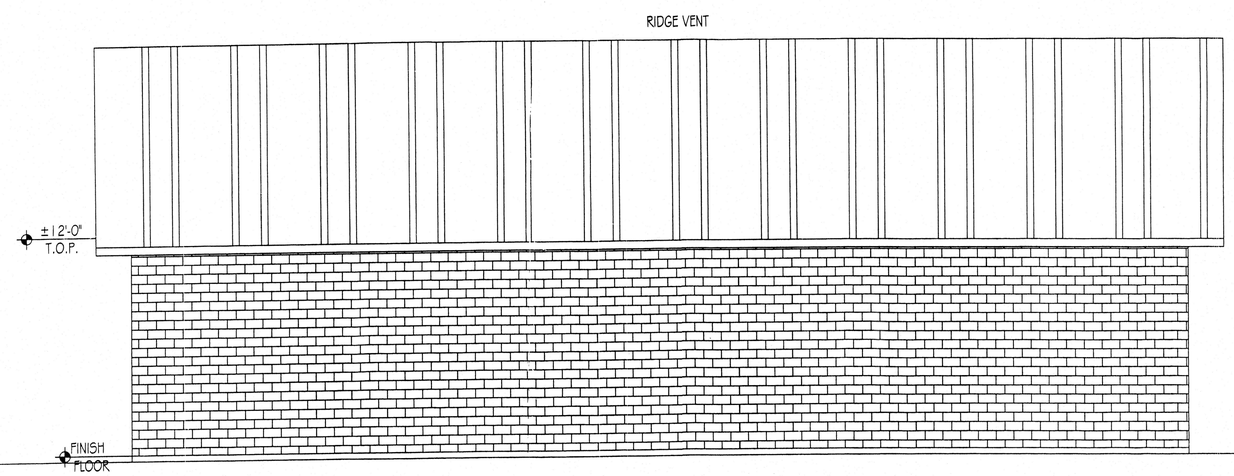


## REAR ELEVATION

1/4"=1'-0"

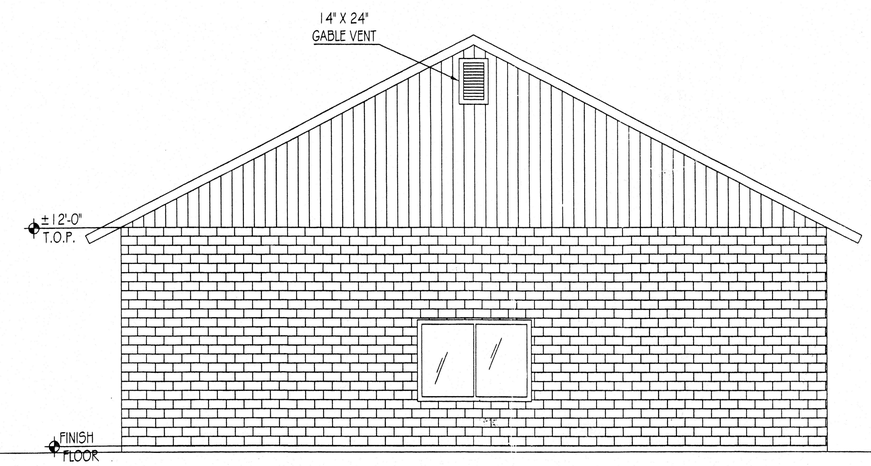


## LEFT ELEVATION

1/4"=1'-0"

150

ROOF VENTING CALCULATIONS
2400 SQ. FT./300=8.00 SQ. FT. OF NET FREE AIR,
8.00x144=1152 SQ. IN. OF NET FREE AIR,
2-24"x30" GABLE VENT ALLOWS 648 SQ. IN.
50' OF RIDGE VENT ALLOWS 900 SQ. IN
1152 SQ. IN. REQUIRED, 1548 SQ. IN ALLOWED

PLANS REVIEWED
Subject to conformance
With all City of Show Low
Adopted Codes and Ordinances
3-11-08
Date Plan Reviewer

REVISIONS

ELEVATIONS

A NEW COMMERCIAL BUILDING FOR
Bobby Cooper

| Date: | Job Number: |
|---|---|
| 2/08 | 167 |
| Drawn By: | Checked By: |
| JL | XXX |

Sheet:
1

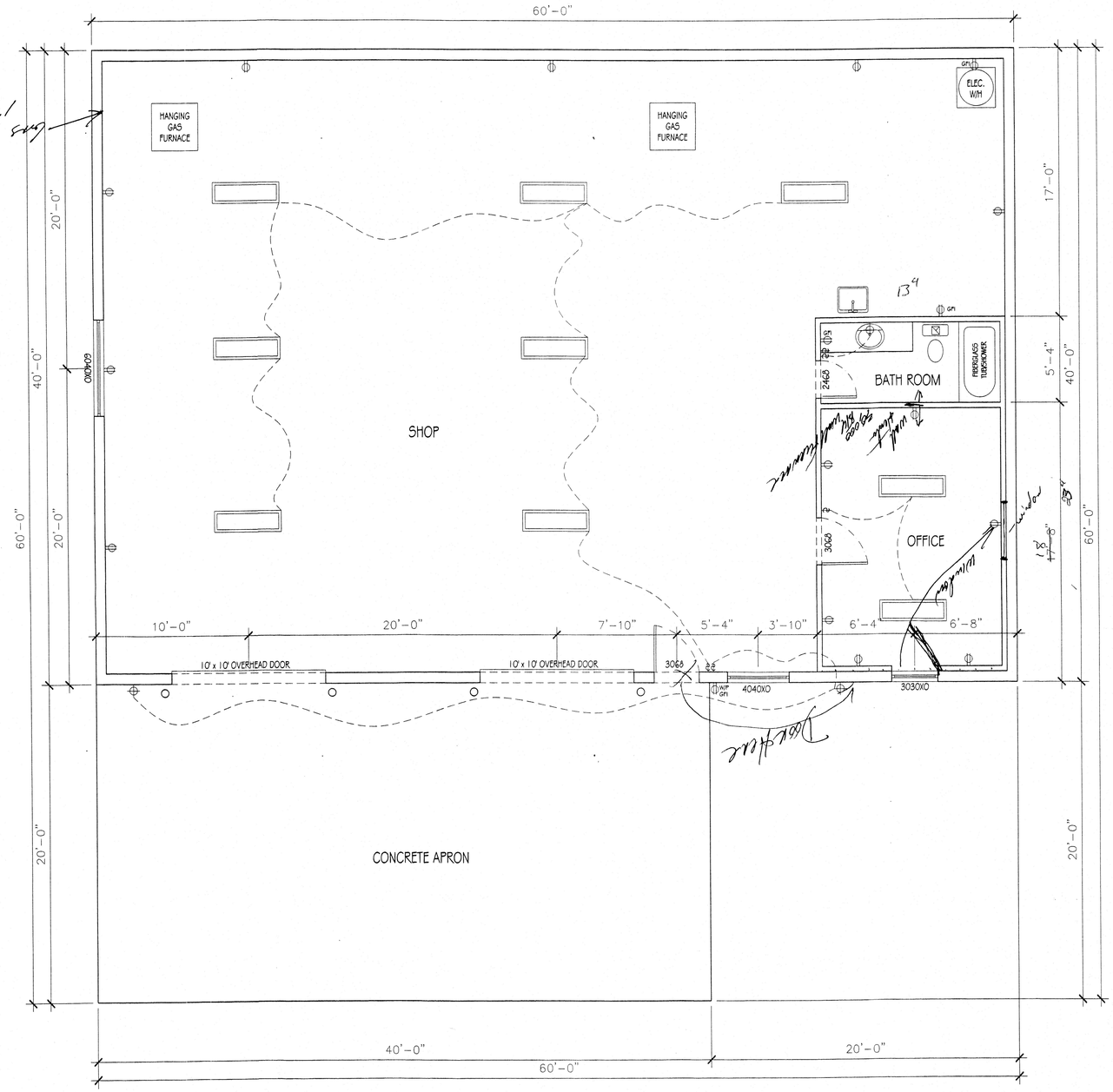


## FLOOR PLAN

1/4"=1'-0"

| LEGEND | |
|---|---|
| | DUPLEX OUTLET |
| | 220 OUTLET |
| $ | SWITCH |
| $3 | 3 WAY SWITCH |
| | WEATHER PROOF EXTERIOR WALL MOUNT |
| | WALL MOUNT |
| | ½ HOT SWITCH OUTLET |
| | ARC FAULT OUTLET |
| SD | SMOKE DETECTOR |
| | CEILING FAN W/LIGHT |
| | 1'X4' FLORESCENT |
| | STRIP FLORESCENT |
| | EXAUST FAN W/HEATER |
| | WALL SCONCE |
| | ROPE LIGHTING |
| | CHANDELIER LIGHT |
| | 6" RECESSED CAN LIGHT |
| | 3" RECESSED CAN LIGHT |
| | PHONE JACK |
| | TV / CABLE |

| SQUARE FOOTAGES | |
|---|---|
| MAIN FLOOR | 2400 SQ. FT. |

PLANS REVIEWED
Subject to conformance
with all City of Sherrill Low
Adopted Codes and Ordinances

3-11-03
Date Plans Examiner

REVISIONS

# FLOOR PLAN

A NEW COMMERCIAL BUILDING FOR

Bobby Cooper

| Date: | Job Number: |
|---|---|
| 2/08 | 167 |
| Drawn By: JL | Checked By: XXX |

Sheet: 2

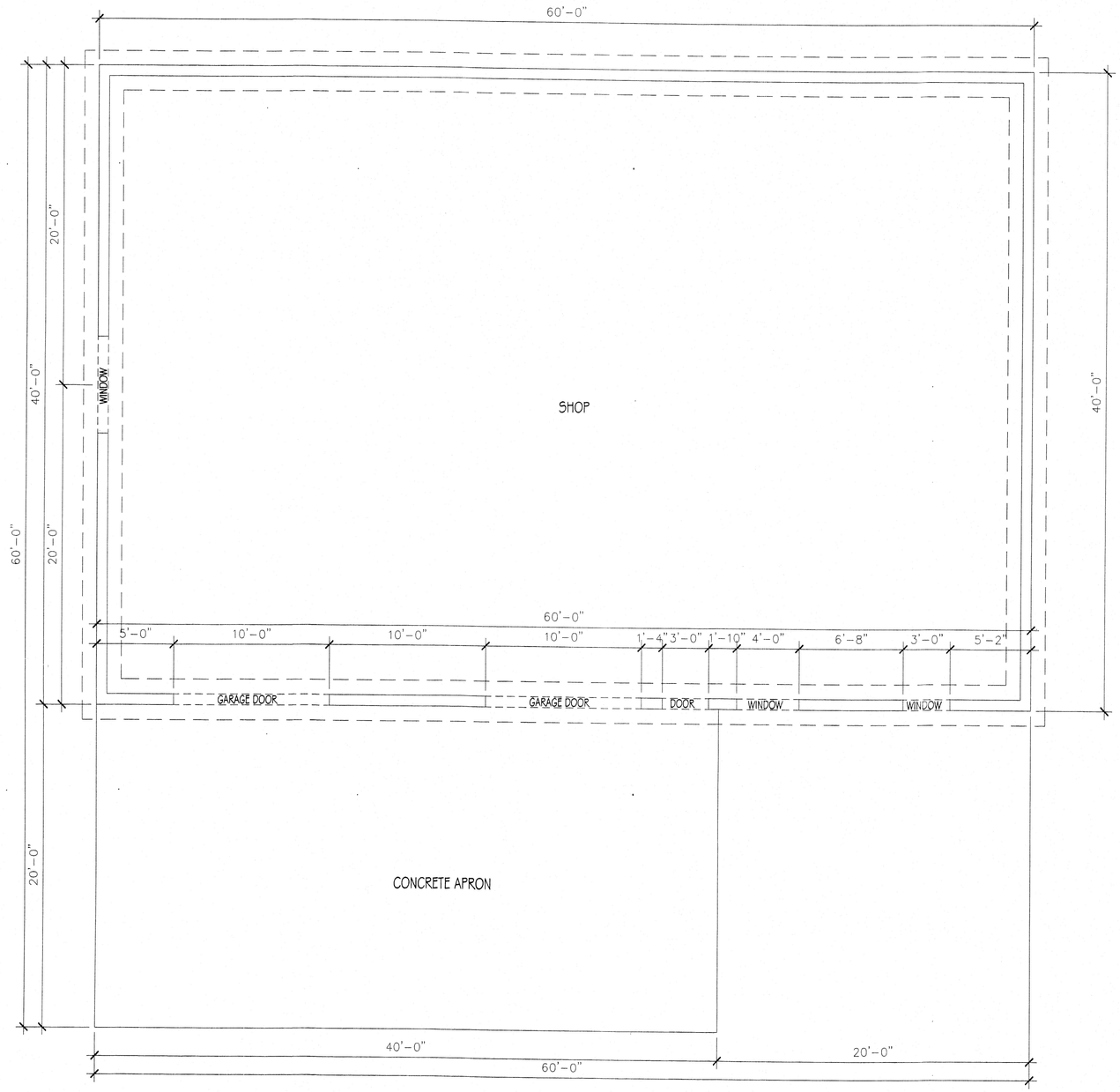


# FOUNDATION PLAN

1/4"=1'-0"

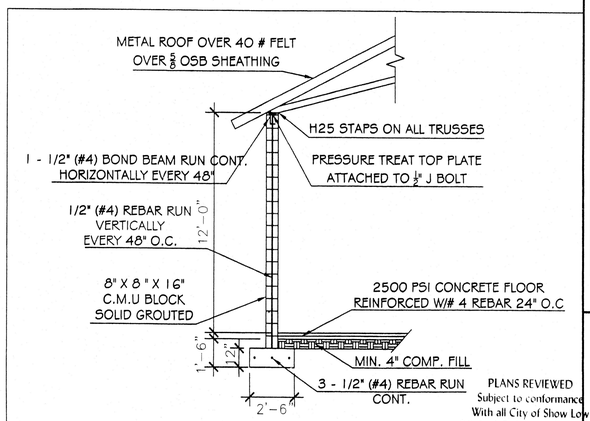


FOUNDATION/SLAB CROSS SECTION
NOT TO SCALE

PLANS REVIEWED
Subject to conformance
With all City of Show Low
Adopted Codes and Ordinances

3-11-08
Date

Plans Examiner

REVISIONS

FOUNDATION

A NEW COMMERCIAL BUILDING FOR

Bobby Cooper

| Date: | Job Number: |
|---|---|
| 2/08 | 167 |
| Drawn By: | Checked By: |
| JL | XXX |

Sheet: 3

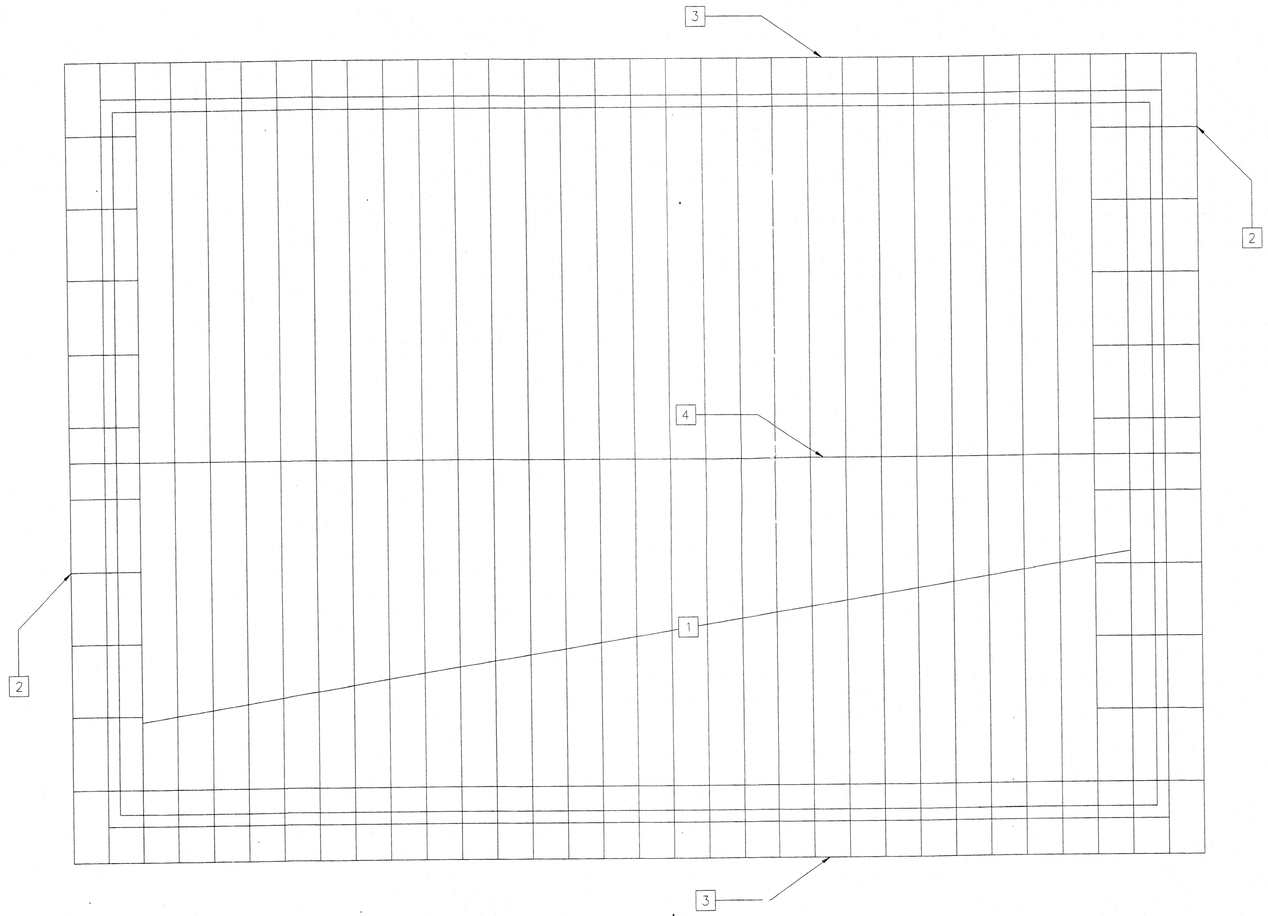


# ROOF FRAMING PLAN

1/4"=1'-0"

REVISIONS

ROOF FRAMING

A NEW COMMERCIAL BUILDING FOR

Bobby Cooper

| Date: | Job Number: |
|---|---|
| 2/08 | 167 |
| Drawn By: JL | Checked By: XXX |
| Sheet: | |

PLANS REVIEWED
Subject to conformance
With all City of Show Low
Adopted Codes and Ordinan

2-11-08
Date

Plans Examiner

ROOF FRAMING NOTES

1. 40' SCISSOR TRUSS $\frac{5}{12}$ OUTSIDE PITCH VAULTED INSIDE
2. 2 X 4 OUTLOOKERS @ 48 O.C.
3. 2 X 8 FACIA
4. RIDGE LINE