MECHANICAL ABBREVIATIONS

AC	ALTERNATING CURRENT	KW	KILOWATTS
ACC	AIR COOLED CONDENSER	KWH	KILOWATT HOUR
ACU	AIR CONDITIONING UNIT		
AD	ACCESS DOOR		
ADJ	ADJUSTABLE	LAT	LEAVING AIR TEMPERATURE (°F)
AF	AIR FOIL	LBS/#	POUNDS
AFF	ABOVE FINISHED FLOOR	LD	LINEAR DIFFUSER
AHU	AIR HANDLING UNIT	LF	LINEAR FEET
AP	ACCESS PANEL	LWT	LEAVING WATER TEMPERATURE (°F)
ARCH	ARCHITECTURE		
ATC	AUTOMATIC TEMPERATURE CONTROL		
ATM	ATMOSPHERE		
AUX	AUXILIARY	MOD	MOTOR OPERATED DAMPER
AVG	AVERAGE	MAU	MAKEUP AIR UNIT
AWG	AMERICAN WIRE GAUGE	MAX	MAXIMUM
		MB	MIXING BOX
		MBH	1000 BTUH
B	BOILER	MC	MECHANICAL CONTRACTOR
BDD	BACKDRAFT DAMPER	MCC	MOTOR CONTROL CENTER
BHP	BRAKE HORSEPOWER	MFR	MANUFACTURER
BOD	BOTTOM OF DUCT	MIN	MINIMUM
BOS	BOTTOM OF STEEL	MISC	MISCELLANEOUS
BTU	BRITISH THERMAL UNIT	MMBH	1,000,000 BTUH
BTUH	BTU PER HOUR		
		NA	NOT APPLICABLE
CAV	CONSTANT AIR VOLUME	NC	NOISE CRITERIA, dB RE 20 uPa
CC	COOLING COIL	NC	NORMALLY CLOSED
CFM/ ∮	CUBIC FEET PER MINUTE ∮	NIC	NOT IN CONTRACT
CH	CHILLER	NO	NORMALLY OPEN
C&I	CONTROLS & INSTRUMENTATION	NTS	NOT TO SCALE
CLG	CEILING		
CMU	CONCRETE MASONRY UNIT	OA	OUTSIDE AIR
CO	CARBON MONOXIDE	OAT	OUTSIDE AIR TEMPERATURE
CO2	CARBON DIOXIDE	OAD	OUTSIDE AIR DAMPER
COND	CONDENSATE	OBD	OPPOSED BLADE DAMPER
CONN	CONNECTION	OZ	OUNCE
CONT.	CONTINUATION		
CORR	CORRIDOR		
CT	COOLING TOWER	P	PUMP
CU	CONDENSING UNIT	PC	PLUMBING CONTRACTOR
CUH	CABINET UNIT HEATER	PD	PRESSURE DROP
CV	CONTROL VALVE	PH	PHASE
CU FT	CUBIC FEET	PHC	PREHEAT COIL
CVS	CONTROL VALVE STATION	PROP	PROPELLER
		PSI	POUNDS PER SQUARE INCH
D	DIFFUSER OR REGISTER	PSIG	PSI, GAUGE
dB	DECIBEL, RE 10 WATT	P+F	PITCH AND FLOW
DBT	DRY BULB TEMPERATURE (°F)		
DDC	DIRECT DIGITAL CONTROL	QTY	QUANTITY
DEG	DEGREE FAHRENHEIT (°F)		
DIA	DIAMETER		
DIM	DIMENSION	R	REGISTER
DN	DOWN	RA	RETURN AIR
DP	DEW POINT TEMPERATURE (°F)	RC	ROOM CRITERIA, dB RE 20 uPa
DX	DIRECT EXPANSION	RF	RETURN/RELIEF AIR FAN
DWG	DRAWING	RH	RELATIVE HUMIDITY
		RHC	REHEAT COIL
		RPM	REVOLUTIONS PER MINUTE
E	EXHAUST		
EA	EXHAUST AIR		
EAT	ENTERING AIR TEMPERATURE (°F)	S	SMOKE DETECTOR
EC	ELECTRICAL CONTRACTOR	SA	SUPPLY AIR
EER	ENERGY EFFICIENCY RATIO	SEER	SEASONAL ENERGY EFFICIENCY RATIO
EF	EXHAUST FAN	SENS	SENSIBLE
EFF	EFFICIENCY	SF	SQUARE FEET
ELEV	ELEVATION	SP	STATIC PRESSURE (IN. WG.)
ESP	EXTERNAL STATIC PRESSURE	SPEC	SPECIFICATION
ET	EXPANSION TANK	SQ	SQUARE
EWT	ENTERING WATER TEMPERATURE (°F)	SS	STAINLESS STEEL
		SV	SOLENOID VALVE
F	FILTER		
FA	FACE AREA		
FC	FORWARD CURVED	T	THERMOSTAT
FCU	FAN COIL UNIT	TEMP	TEMPERATURE (°F)
FD	FLOOR DRAIN	TOD	TOP OF DUCT
FLR	FLOOR	TOP	TOP OF PIPE
FP	FIRE PROTECTION	TOS	TOP OF STEEL
FPM	FEET PER MINUTE	TSP	TOTAL STATIC PRESSURE
FR	FINNED RADIATION	TSTAT	THERMOSTAT
FT	FEET	TxD	TRANSFER DUCT
FVEL	FACE VELOCITY	TYP	TYPICAL
F&T	FLOAT AND THERMOSTATIC		
		UC	UNDERCUT
		UH	UNIT HEATER
GA	GAUGE OR GAGE	UL	UNDERWRITERS LABORATORY
GAL	GALLON	UV	UNIT VENTILATOR
GALV	GALVANIZED	UVL	ULTRA VIOLET LIGHT
GC	GENERAL CONTRACTOR		
GH	GRAVITY HOOD	V	VALVE, VOLT
GPM	GALLONS PER MINUTE	VA	VOLT-AMPERE
		VD	VOLUME DAMPER
HC	HEATING COIL	VEL	VELOCITY
H0A	HAND-OFF-AUTOMATIC	VFD	VARIABLE FREQUENCY DRIVE
HP	HORSEPOWER	VFV	VAV, WITH FAN
HR	HOUR	VOL	VOLUME
HVU	HEATING & VENTILATING UNIT		
HWST	HOT WATER SUPPLY TEMPERATURE		
HX	HEAT EXCHANGER	W	WATT
		WB	WET BULB TEMPERATURE (°F)
		WC	WATER COLUMN
IB	INVERTED BUCKET TRAP	WG	WATER GAUGE
IFB	INTEGRAL FACE & BYPASS	WMS	WIRE MESH SCREEN
IN	INCH		
IPS	IRON PIPE SIZE		

DRAWING SYMBOLS

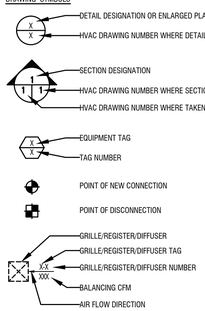

DUCTWORK SYMBOLS

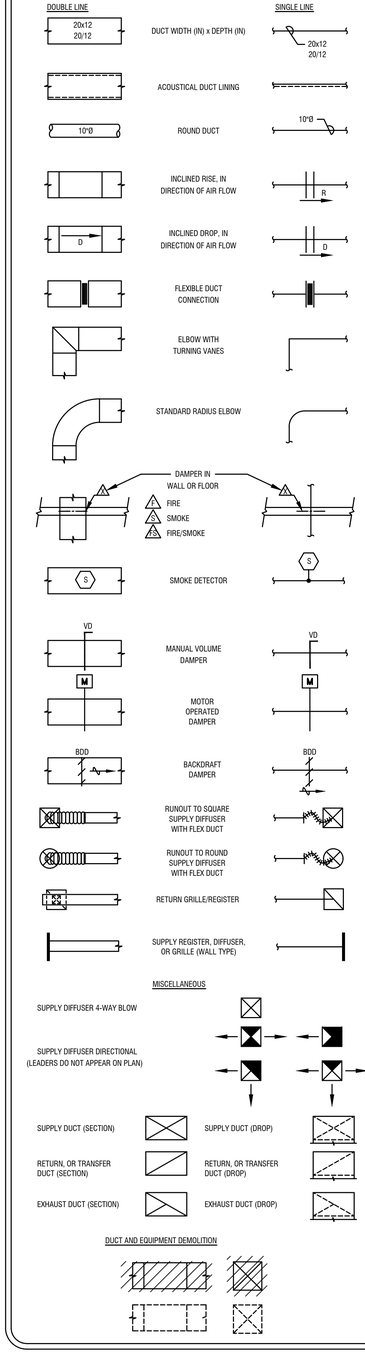

GENERAL PIPING NOTES:

1. INSTALL PIPING TO ALLOW ACCESS VALVES, AIR VENTS, EQUIPMENT REQUIRING ACCESS, AND TO PROVIDE MAXIMUM HEADROOM.
2. PROVIDE OFFSETS TO MAINTAIN CEILING HEIGHT AND TO COORDINATE WITH OTHER TRADES.
3. INSTALL VALVES IN HORIZONTAL PIPING WITH VALVE STEMS AT OR ABOVE THE PIPE CENTERLINE.
4. ARRANGE PIPING FOR VENTING OF AIR AND DRAINAGE OF THE ENTIRE SYSTEM.
5. INSTALL CONDENSATE DRAIN PIPING PITCHED AT 1/8" PER FOOT IN DIRECTION OF FLOW.

GENERAL DUCTWORK NOTES:

1. CHANGES IN SHAPE OR DIMENSION SHALL BE MADE WITH MAXIMUM TRANSITION OF 1 TO 7.
2. SEPARATE GALVANIZED SHEET METAL FROM ALUMINUM OR COPPER WITH LEAD OR FELT GASKETS.
3. PROVIDE SUPPLEMENTAL STIFFENING AND SUPPORT TO DUCTS AND APPARATUS CASINGS TO PREVENT DRUMMING, SAGGING, AND TO PROVIDE A STRUCTURALLY SOUND ASSEMBLY.
4. INSTALL DUCT FROM SHOWER EXHAUST GRILLES GRADING DOWN TO EXHAUST GRILLE, WITHOUT DIPS OR TRAPS.
5. PROVIDE OFFSETS AND TRANSITIONS TO COORDINATE WITH OTHER WORK.
6. PROVIDE DUCTWORK AND TRANSITIONS TO CONNECT DUCTWORK TO EQUIPMENT AND COILS.
7. INSTALL FLEXIBLE DUCTWORK IN A FULLY EXTENDED CONDITION WITHOUT SAGS OR KINKS.
8. INSTALL DUCT MOUNTED SMOKE DETECTORS IN ACCESSIBLE LOCATIONS.
9. UNLESS NOTED OTHERWISE, PROVIDE 1" THICK DUCT LINING FOR A MINIMUM OF 10 FEET OF DUCTWORK FROM THE SUPPLY AIR DISCHARGE AND RETURN AIR INLET OF AIR HANDLING UNITS, ENERGY RECOVERY UNITS, AND BLOWER COILS. FOR ALL LINED DUCTWORK, DIMENSIONS INDICATED ON DRAWINGS SHALL BE INSIDE CLEAR DIMENSIONS MEASURED FROM FACE-OF-LINER TO FACE-OF-LINER. LINING IS NOT REQUIRED FOR TOILET EXHAUST FANS. ROOF MOUNTED DUCTS ARE TO BE LINED AS DESCRIBED ABOVE AND ARE TO BE INSULATED WITH 2" THICK RIGID INSULATION AND WRAPPED WITH EPDM MATERIAL, SAME COLOR AS ROOF.
10. INSTALL DUCTS CONVEYING GREASE LADEN AIR AT A PITCH OF 1/4" PER FOOT OPPOSITE THE DIRECTION OF FLOW

GENERAL AUTOMATIC TEMPERATURE CONTROLS NOTES:

1. TRANSFORMERS OR FILTERS FOR OPERATION OF AUTOMATIC TEMPERATURE CONTROLS FROM BUILDING POWER CIRCUITS SHALL BE PROVIDED UNDER DIVISION 23.
2. WIRING LOWER THAN 110 VOLTS FOR INTERLOCKED DEVICES, DDC CONTROLLERS, TERMINAL CONTROL UNITS, FLOW MEASURING DEVICES, AND OTHER POWER CONSUMING CONTROL DEVICES SHALL BE FURNISHED AND INSTALLED UNDER DIVISION 23. WIRING 110 VOLTS AND HIGHER FOR INTERLOCKED DEVICES, DDC CONTROLLERS, TERMINAL CONTROL UNITS, FLOW MEASURING DEVICES, AND OTHER POWER CONSUMING CONTROL DEVICES SHALL BE FURNISHED AND INSTALLED UNDER DIVISION 26.
3. PROVIDE SUPPLEMENTAL STIFFENING AND SUPPORTS TO DUCTS AND APPARATUS CASINGS TO PREVENT DRUMMING, SAGGING AND TO PROVIDE A STRUCTURALLY SOUND ASSEMBLY.
4. BRANCH CIRCUIT WIRING AND CONDUIT FURNISHED FOR CONTROL EQUIPMENT POWER SHALL BE SEPARATE FROM OTHER POWER WIRING. EACH CIRCUIT SHALL EXTEND TO A 120V BRANCH CIRCUIT PANEL, AND IDENTIFIED 120V, 20 AMPERE, SINGLE POLE BRANCH CIRCUIT BREAKER FURNISHED IN THE PANEL TO SERVE THE CIRCUIT. NO MORE THAN 2 DDC CONTROLLER INSTALLATIONS SHALL OPERATE FROM A SINGLE 120V BRANCH CIRCUIT, UNLESS INDICATED OTHERWISE.
5. WHERE SYSTEMS ARE SERVED BY EMERGENCY POWER, CONTROLS FOR OPERATION OF THOSE SYSTEMS SHALL ALSO BE SERVED BY EMERGENCY POWER.
6. WHERE DAMPERS PREVENT AIRFLOW THROUGH AN AIR HANDLING UNIT OR FAN, THOSE DAMPERS SHALL BE PROVEN OPEN PRIOR TO STARTING THE UNIT OR FAN. PROOF SHALL BE BY MECHANICAL SAFETY LIMIT SWITCH ACTIVATED BY THE DAMPER BLADE. FOR SERVICE WITH VARIABLE FREQUENCY DRIVES THE SWITCH SHALL BE WIRED IN THE AUTOMATIC AND HAND/TEST POSITIONS AND IN THE BYPASS POSITION FOR VARIABLE FREQUENCY DRIVES WITH BYPASS.
7. ALL LOW VOLTAGE WIRING AND AIR PIPING OR TUBING SHALL BE PLENUM RATED. MECHANICAL CONTRACTOR SHALL FURNISH ALL LOW VOLTAGE WIRING, AIR PIPING, AND TUBING REQUIRED FOR AUTOMATIC TEMPERATURE CONTROLS SYSTEMS. LOW VOLTAGE WIRING IS ALL WIRE OPERATING AT A VOLTAGE LOWER THAN 110 VOLTS.
8. ALL TEMPERATURE CONTROL SHALL HAVE A 5 DEGREE DEAD-BAND WITH OVERLAP RESTRICTIONS. EQUIPMENT SHALL BE PROVIDED WITH AT LEASE ONE MEANS OF EMERGENCY SHUT DOWN. SET BACK CONTROL SHALL ALLOW FOR AUTOMATIC RESTART AS WELL AS TEMPORARY OPERATION AS REQUIRED BY MAINTENANCE.

ADDITIONAL MECHANICAL REQUIREMENTS:

1. DRAWINGS ARE SCHEMATIC IN NATURE INTENDED TO EXEMPLIFY CODE COMPLIANCE FOR THE PURPOSE OF OBTAINING A CONSTRUCTION PERMIT. THE CONTRACTOR SHALL ASSURE THE PROPER INSTALLATION AND OPERATION OF ALL ASSOCIATED SYSTEMS.
2. THE INSTALLATION AND MATERIALS SHALL BE IN ACCORDANCE WITH ALL LOCAL, STATE AND FEDERAL CODES.
3. PROVIDE R-6 (INSTALLED VALUE) DUCTWORK INSULATION WITH VAPOR BARRIER IN INTERIOR SPACES. INSTALL PER THE MANUFACTURER'S WRITTEN INSTRUCTIONS. INSULATION SHALL BE PROVIDED ON RETURN AIR SYSTEMS WHERE THE DUCTWORK IS NOT LOCATED WITHIN CONDITIONED SPACES. WHERE DUCTWORK IS INSTALLED OUTSIDE, PROVIDE R-12 BOARD WITH WEATHER PROOF JACKET. MATERIALS SHALL BE COMPLIANCE WITH ALL APPLICABLE ASTM TESTS AS WELL AS NFPA 90A AND 90B.
4. DUCTWORK SHALL BE GALVANIZED SHEET STEEL IN THE GAUGE AS REQUIRED PER THE LATEST VERSION OF SMACNA GUIDELINES.
5. PROVIDE SUPPLEMENTAL STIFFENING AND SUPPORTS TO DUCTS AND APPARATUS CASINGS TO PREVENT DRUMMING, SAGGING AND TO PROVIDE A STRUCTURALLY SOUND ASSEMBLY.
6. PROVIDE ALL DUCTWORK FITTINGS INCLUDING BUT NOT LIMITED TO TEES, TAPS, ELBOWS, VOLUME DAMPERS ETC IN ACCORDANCE WITH THE LATEST VERSION OF SMACNA GUIDELINES.
7. COORDINATE ELECTRICAL POWER REQUIREMENTS WITH THE ELECTRICAL CONTRACTOR. PROVIDE MEANS OF DISCONNECT FOR EQIPMENT AS REQUIRED.
8. THE CONTRACTOR SHALL ADJUST DUCTWORK AND EQUIPMENT LAYOUT IN FIELD AS REQUIRED TO FACILITATE A NEAT AND HIGH QUALITY INSTALLATION.
9. PROVIDE CONTROL WIRING AND DEVICES IN COMPLIANCE WITH THE CURRENTLY ADOPTED VERSION OF THE NATIONAL ELECTRIC CODE.
10. DO NOT INSTALL SERVICEABLE EQUIPMENT WITHIN 10' OF ROOF EDGES
11. DO NOT INSTALL AIR INTAKES WITHIN 10' OF EXHAUST TERMINALS OR PLUMBING VENTS
12. FURNISH IOM MANUALS AND AS-BUILT DRAWINGS WITH 90 DAYS OF COMPLETION OF WORK
13. ALL EXPOSED DUCTWORK SHALL BE DOUBLE WALLED OR INTERNALLY LINED TO PREVENT THE FORMATION OF CONDENSATION.
14. ALL REFRIGERATION PIPING SHALL BE ACR TYPE COPPER TUBE WITH BRAZED FITTINGS. SIZED IN ACCORDANCE WITH ASSOCIATED EQUIPMENT MANUFACTURER'S WRITTEN INSTRUCTIONS. INSULATE ALL REFRIGERANT PIPING WITH 1" FLEXIBLE ELASTOMERIC LINER. PROVIDE INSULATION MANUFACTURER'S WEATHER-PROOF MASTIC FOR ALL OUTDOOR INSTALLATIONS.

PRIME CONTRACT NOTE

THIS PROJECT IS SELF PRIME CONTRACTS. THE M.C. SHALL BE RESPONSIBLE FOR ALL CUTTING PATCHING, ETC. FOR THEIR WORK. THE M.C. SHALL MEET, REPORT WORK PROGRESS, ALL SHUTDOWNS, ETC. WITH OWNER. M.C. SHALL COORDINATE WITH ALL OTHER TRADES. SEE FRONT END SPECIFICATIONS FOR DETAILS.

GENERAL MECHANICAL NOTES:

1. CODES AND STANDARDS LISTED IN SPECIFICATIONS AND DRAWINGS ARE MINIMUM STANDARDS. WHERE REQUIREMENTS ON THE DRAWINGS OR SPECIFICATIONS EXCEED THE MINIMUM CODE REQUIREMENTS, THE DRAWINGS OR SPECIFICATIONS SHALL GOVERN.
2. THE POWER RATING OF MOTORS AND OTHER MECHANICAL EQUIPMENT AND THE ELECTRICAL CHARACTERISTICS OF ELECTRICAL SYSTEMS SERVING THEM HAVE BEEN ESTABLISHED AS MINIMUMS WHICH ALLOW THAT EQUIPMENT TO FUNCTION PROPERLY TO PRODUCE THE REQUIRED CAPACITIES. POWER RATINGS INCLUDE REASONABLE SAFETY FACTORS TO ACCOMMODATE COMMON DIFFERENCES BETWEEN DESIGN PARAMETERS AND FIELD CONSTRUCTION PRACTICES. EQUIPMENT WITH POWER RATINGS LESS THAN THOSE INDICATED ON THE DRAWINGS SHALL NOT BE PERMITTED.
3. REASONABLE EFFORTS HAVE BEEN MADE TO COORDINATE ELECTRICAL REQUIREMENTS OF MECHANICAL EQUIPMENT WITH THE ELECTRICAL SYSTEMS SERVING THAT EQUIPMENT. DIFFERENCES AMONG MANUFACTURERS OF MECHANICAL EQUIPMENT MAKE IT IMPOSSIBLE TO PRODUCE A SINGLE ELECTRICAL DESIGN WHICH WILL SATISFY THE VARYING ELECTRICAL REQUIREMENTS OF THE THOSE MANUFACTURERS. CONSEQUENTLY, THE CONTRACTOR SHALL COORDINATE THE ELECTRICAL REQUIREMENTS OF THE MECHANICAL EQUIPMENT ACTUALLY FURNISHED ON THIS PROJECT WITH THE EQUIPMENT ACTUALLY FURNISHED ON THIS PROJECT AND PROVIDE ELECTRICAL SYSTEMS REQUIRED BY THAT EQUIPMENT. THIS COORDINATION EFFORT SHALL BE COMPLETED PRIOR TO THE INSTALLATION OF EITHER THE MECHANICAL EQUIPMENT OR THE ELECTRICAL SYSTEMS SERVING THAT EQUIPMENT. ELECTRICAL SYSTEM REVISIONS REQUIRED TO COORDINATE WITH THE MECHANICAL EQUIPMENT ACTUALLY FURNISHED SHALL BE PROVIDED AT NO ADDITIONAL COST TO THE OWNER.
4. DRAWINGS INDICATE GENERAL LOCATIONS OF FIXTURES, APPARATUS, EQUIPMENT, PIPING, AND DUCTWORK. CHANGES ON LOCATION SHALL BE MADE TO ACCOMMODATE EXISTING OR NEW BUILDING CONDITIONS AND COORDINATION WITH OTHER TRADES, INCLUDING HVAC, PLUMBING, ELECTRICAL, FIRE PROTECTION, STRUCTURAL, AND ARCHITECTURAL, SHALL BE MADE WITHOUT ADDITIONAL COST TO THE OWNER.
5. THOROUGHLY CLEAN/FLUSH EXISTING AND NEW HYDRONIC PIPING SYSTEMS WITH CLEAN WATER. AFTERWARDS, REMOVE AND CLEAN OR REPLACE STRAINER SCREENS.
6. ALL HVAC SYSTEMS SHALL BE TESTED AND BALANCED ACCORDING TO NEBB AND SMACNA STANDARDS. PROVIDE REPORT UPON COMPLETION.
7. PROVIDE ACCESS TO EQUIPMENT AND PORTIONS OF BUILDING SYSTEMS REQUIRING SERVICE.
8. DO NOT INSTALL DUCTWORK, PIPING, OR EQUIPMENT IN ELECTRICAL ROOMS, ELEVATOR ROOMS, OR ELEVATOR SHAFTS, UNLESS EXPLICITLY INDICATED ON THE DRAWINGS. PIPING, DUCTWORK, AND EQUIPMENT (SWITCHGEAR, SWITCHBOARDS, PANELS, MOTOR CONTROL CENTERS, VARIABLE FREQUENCY DRIVES, TRANSFORMERS, OR STARTERS) SHALL NOT BE INSTALLED DIRECTLY ABOVE OR 42" IN FRONT OF ELECTRICAL EQUIPMENT FROM THE FLOOR TO THE STRUCTURE ABOVE.
9. PROVIDE START UP AND COMMISSIONING OF ALL EQUIPMENT PROVIDED IN COMPLIANCE WITH THE MANUFACTURERS WRITTEN INSTRUCTIONS. PROVIDE START UP AND WARRANTEE PAPERWORK AT THE COMPLETION OF WORK. WORK SHALL BE COMPLETED BY THE MANUFACTURER OR A MANUFACTURERS' CERTIFIED FIRM OR TECHNICIAN. CONFIRM CALIBRATION OF ALL SENSORS AND ADJUST AS REQUIRED.
10. UNLESS INDICATED OTHERWISE, EQUIPMENT AND MATERIALS SHALL BE NEW AND OF THE CUSTOMARY STANDARD AND QUALITY FURNISHED BY THE DESIGNATED MANUFACTURER FOR THAT CATALOG NUMBER.
11. AIR SYSTEMS SHALL OPERATE WITHOUT AERODYNAMIC NOISE GENERATED FROM FAULTY INSTALLATION OF DUCTWORK, DIFFUSERS, OR ANY PORTION OF THE AIR DISTRIBUTION SYSTEM.
12. SUPPORT PIPING INDEPENDENTLY OF EQUIPMENT. HANGER RODS SHALL BE SUSPENDED FROM THE STRUCTURE. DO NOT SUSPEND FROM OTHER PIPING, CONDUIT, EQUIPMENT, OR DUCTWORK.
13. ALL WORK REFERENCED UNDER DIVISION 23 SHALL BE DONE BY THE MECHANICAL CONTRACTOR.
14. DRAWINGS INDICATE DESIGN INTENT. CONTRACTOR IS RESPONSIBLE TO FIELD VERIFY ALL INSTALLATIONS. CONTRACTOR IS RESPONSIBLE FOR COORDINATION BETWEEN OTHER TRADES TO ASSURE THE PROPER INSTALLATION OF ALL EQUIPMENT.
15. ALL PIPING, DUCTWORK, INSULATION, CONDUITS, SUPPORTS AND HVAC EQUIPMENT EXPOSED TO VIEW SHALL BE PAINTED. COLOR SHALL BE SELECTED BY ARCHITECT.
16. WHERE DUCTWORK IS EXPOSED DUCT SEAMS SHALL BE MINIMIZED AND SHALL BE OF HIGH QUALITY WORKMANSHIP. ALL DUCTWORK SHALL BE CONSTRUCTED AND SEALED IN ACCORDANCE WITH SMACNA STANDARDS.
17. ALL MATERIALS EXPOSED WITHIN THE PLENUM SHALL BE NON COMBUSTIBLE OR SHALL HAVE A FLAME SPREAD INDEX OF NOT MORE THAN 25 AND A SMOKE-DEVELOPED INDEX OF NOT MORE THAN 50 WHEN TESTED IN ACCORDANCE WITH ASTM E-84.

PIPING SYMBOLS

GENERAL

(NAME) E	EXISTING PIPE
(NAME)	EXISTING PIPE TO BE REMOVED

HEATING

A	COMPRESSED AIR
ATV	ATMOSPHERIC VENT
PC	PUMPED CONDENSATE
MU	MAKE-UP WATER (COLD WATER FILL)
VAC	VACUUM AIR
HWS	LOW TEMPERATURE HOT WATER SUPPLY
HWR	LOW TEMPERATURE HOT WATER RETURN
HPS	HIGH PRESSURE STEAM
MPS	MEDIUM PRESSURE STEAM
LPS	LOW PRESSURE STEAM
HPC	HIGH PRESSURE CONDENSATE
MPC	MEDIUM PRESSURE CONDENSATE
LPC	LOW PRESSURE CONDENSATE

AIR CONDITIONING & REFRIGERATION

CS	CONDENSER WATER SUPPLY
CR	CONDENSER WATER RETURN
DTS	DUAL TEMPERATURE WATER SUPPLY
DTR	DUAL TEMPERATURE WATER RETURN
D	DRAIN LINE
FILL	FILL LINE
RL	REFRIGERANT LIQUID
RS	REFRIGERANT SUCTION
CWS	CHILLED WATER SUPPLY
CWR	CHILLED WATER RETURN
HCWS	LOW TEMPERATURE CHILLED WATER SUPPLY
HCWR	HIGH TEMPERATURE CHILLED WATER RETURN
GCS	GLYCOL COOLING FLUID SUPPLY
GCR	GLYCOL COOLING FLUID RETURN

ALL INSTALLATIONS AND MATERIALS SHALL MEET THE FOLLOWING:

1. INTERNATIONAL BUILDING CODE: 2018
2. INTERNATIONAL FIRE CODE: 2018
3. INTERNATIONAL ENERGY CONSERVATION CODE: 2018
4. INTERNATIONAL MECHANICAL CODE: 2018
5. INTERNATIONAL FUEL GAS CODE: 2018
6. ALL FEDERAL, STATE AND LOCAL ORDINANCES

CONTROL SYMBOLS

T	THERMOSTAT	DP	DIFFERENTIAL PRESSURE SENSOR	F	AIR FLOW SENSOR		FUSED DISCONNECT
C	CO2 SENSOR	P	STATIC PRESSURE SENSOR	W	WATER FLOW SENSOR		MOTOR STARTER
CO	CO SENSOR	S	SMOKE DETECTOR	CS	CURRENT SENSING RELAY		COMBINATION STARTER DISCONNECT
S	TEMPERATURE SENSOR	MS	MOTOR STARTER CONTACT	LS	LIMIT SWITCH	U	USER DEFINED
S	EMERGENCY BOILER SHUTOFF	R	CONTROL RELAY	LS	LIMIT SWITCH	U	USER DEFINED
T	DUCT OR PIPE MOUNTED TEMPERATURE SENSOR	M	MOTORIZED ACTUATOR	TX	TRANSFORMER W/ LOAD SIDE DISCONNECT		
F	FREEZE STAT	MS	MOTORIZED ACTUATOR W/ END SWITCH		UN FUSED DISCONNECT		

PIPING SYMBOLS

PIPING SPECIALTIES & FITTINGS

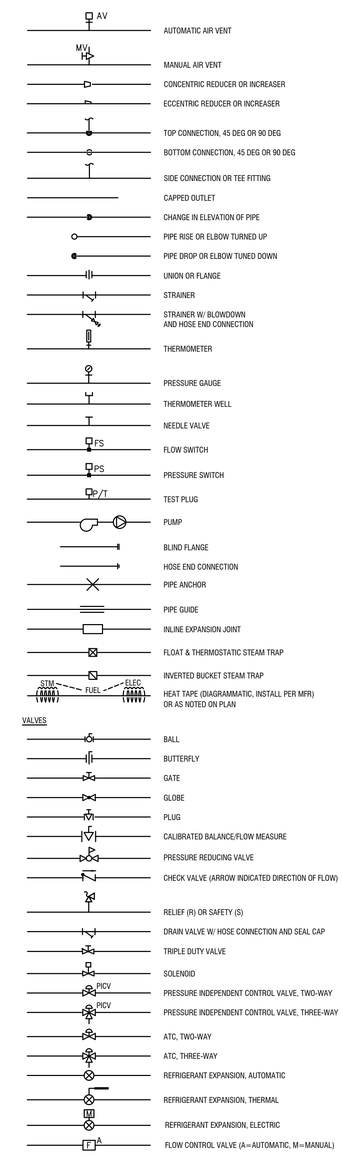

Client:

16-22 Union Street - Apartment Building

Client: Empire Property Construction
16-22 Union St.
Wilkes-Barre, Pa 18701

Consultants:

DMG
design management group
consulting engineers
570 299 7520
dmgeng.com

CAM architect
CAM architect, LLC
ARCHITECTS | PLANNERS
606 North Main St. Wilkes-Barre, PA 18705
T | 570| 824.3320
F | 570| 606.4966
www.camarchus.com

© 2026 CAM ARCHITECT

Seals:

PRELIMINARY - NOT FOR CONSTRUCTION
THIS DOCUMENT IS ISSUED FOR INFORMATION PURPOSES ONLY AND MAY NOT BE USED FOR CONSTRUCTION OR BIDDING. THIS DOCUMENT IS NOT INTENDED FOR CONSTRUCTION UNTIL SEALED BY THE ARCHITECT. ALL RIGHTS RESERVED. THE ARCHITECT OF CONSTRUCTION DOCUMENTS FROM THE ARCHITECT.

Revisions | Issues

No: Date:

Phase:
PERMIT/PRICING

Project: Apartment Building
Date: 06/15/2026
Drawn: SAS Checked: KJS
Scale: AS NOTED
Sheet:
MECHANICAL COVER DRAWING
M-1

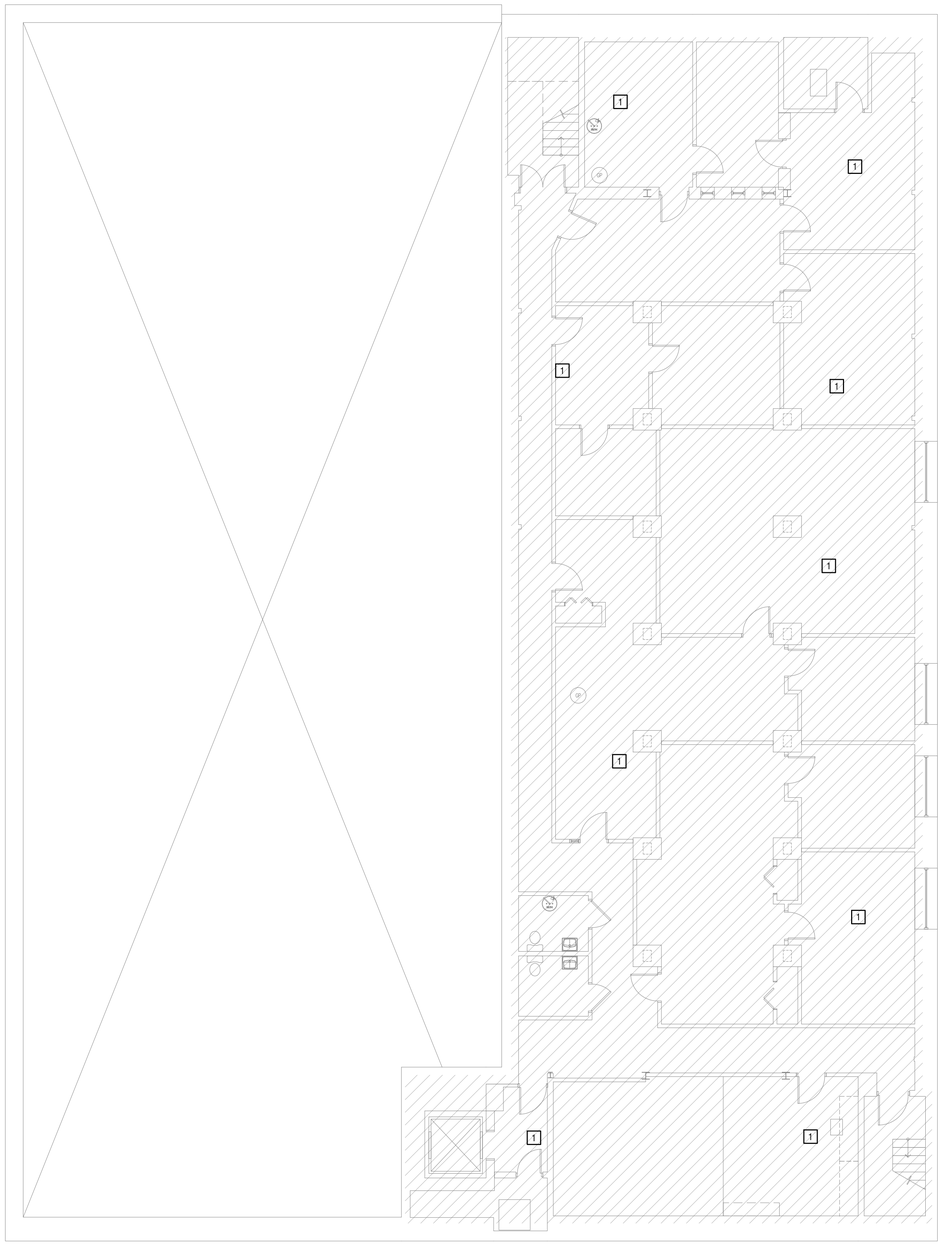

GENERAL DEMOLITION NOTES

1. HATCHED AREAS INDICATE MECHANICAL AND HVAC EQUIPMENT TO BE REMOVED, UNLESS OTHERWISE NOTED.
2. THE INTENT OF THE DEMOLITION DRAWINGS IS TO GIVE THE M.C. AN OVERALL SCOPE OF WORK REQUIRED TO COMPLETE THIS PROJECT.

1 M-2 MECHANICAL DEMOLITION PLAN - BASEMENT

SCALE: 3/16" = 1'-0"

KEYED DEMOLITION NOTES:

1 DEMOLISH ALL EXISTING MECHANICAL(HVAC) SYSTEMS IN THEIR ENTIRETY. INCLUDING BUT NOT LIMITED TO: EQUIPMENT, DUCTWORK SYSTEMS, PIPING SYSTEMS, CONTROL SYSTEMS, WALL & ROOF PENETRATION TERMINATIONS.

2 M-2 MECHANICAL DEMOLITION PLAN -FIRST FLOOR

SCALE: 3/16" = 1'-0"

Client:

16-22 Union Street - Apartment Building

Client: Empire Property Construction
16-22 Union St.
Wilkes-Barre, Pa 18701

Consultants:

DMG
design management group
consulting engineers
570 299 7520
dmgeng.com

CAM architect
CAM architect, LLC
ARCHITECTS | PLANNERS
608 North Main St. Wilkes-Barre, PA 18705
T | 570| 824.3320
F | 570| 606.4966
www.camarchus.com

© 2026 CAM ARCHITECT

Seals:

PRELIMINARY - NOT FOR CONSTRUCTION
THIS COPY OF THE FILE/DRAWING IS FOR INFORMATION PURPOSES ONLY. DO NOT USE FOR CONSTRUCTION OR BIDDING. DO NOT IS NOT INTENDED FOR CONSTRUCTION WITHOUT A SEALED SET OF CONSTRUCTION DOCUMENTS FROM THE ARCHITECT.

Revisions | Issues

No:	Date:

Phase:
PERMIT/PRICING

Project: Apartment Building
Date: 06/15/2026
Drawn: SAS Checked: KJS
Scale: AS NOTED
Sheet:
MECHANICAL FLOOR PLANS
M-2

GENERAL DEMOLITION NOTES

1. HATCHED AREAS INDICATE MECHANICAL AND HVAC EQUIPMENT TO BE REMOVED, UNLESS OTHERWISE NOTED.
2. THE INTENT OF THE DEMOLITION DRAWINGS IS TO GIVE THE M.C. AN OVERALL SCOPE OF WORK REQUIRED TO COMPLETE THIS PROJECT.

1 M-4 MECHANICAL DEMOLITION PLAN - FOURTH FLOOR

SCALE: 3/16" = 1'-0"

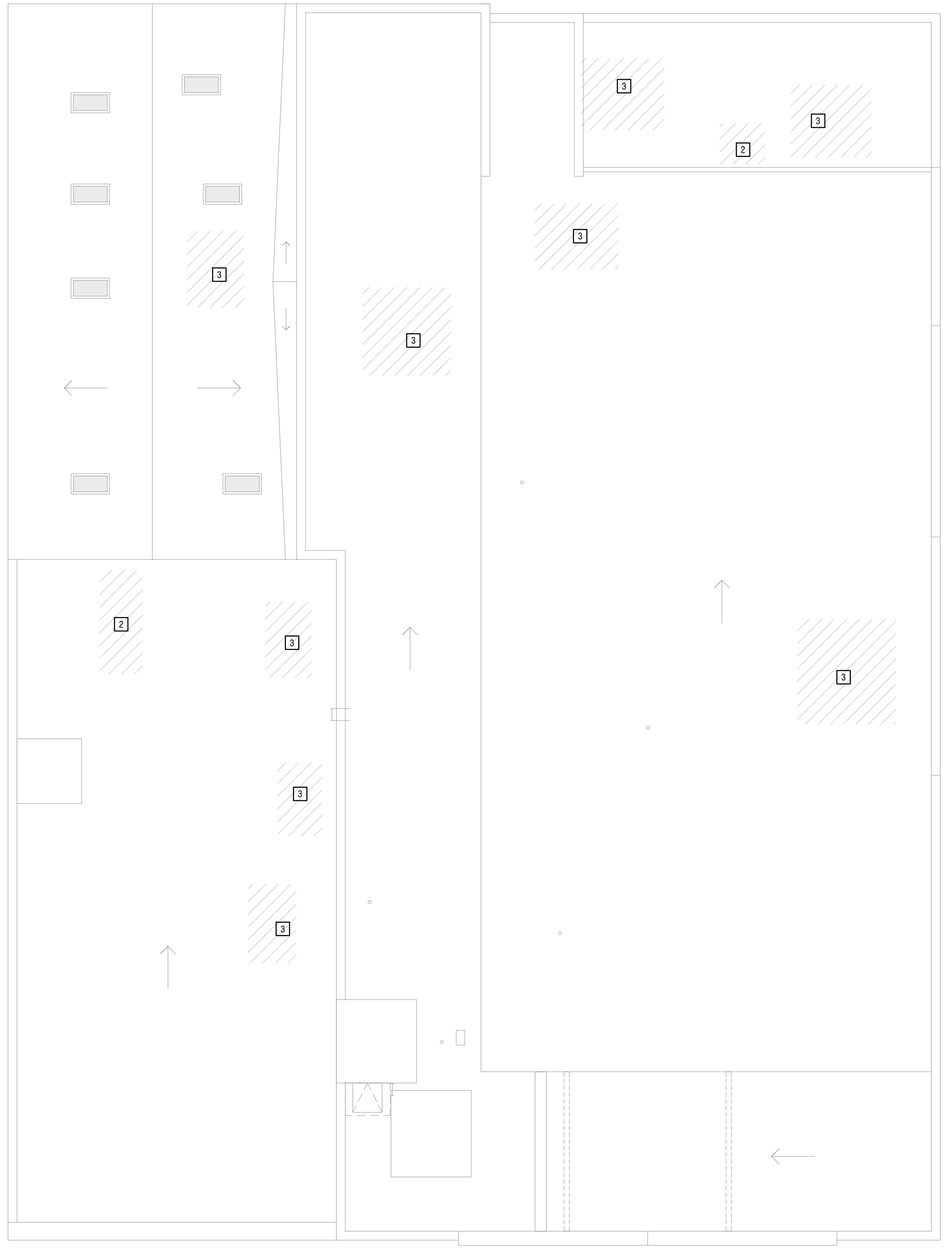

KEYED DEMOLITION NOTES:

1. DEMOLISH ALL EXISTING MECHANICAL(HVAC) SYSTEMS IN THEIR ENTIRETY. INCLUDING BUT NOT LIMITED TO: EQUIPMENT, DUCTWORK SYSTEMS, PIPING SYSTEMS, CONTROL SYSTEMS, WALL & ROOF PENETRATION TERMINATIONS.
2. DEMOLISH EXISTING SPLIT SYSTEM OUTDOOR UNIT AND IT'S ASSOCIATED PIPING AND CONTROLS IN IT'S ENTIRETY. COORDINATE DEMOLITION WITH G.C. FOR ROOF PATCHING.
3. DEMOLISH EXISTING PACKAGED HVAC UNIT AND IT'S ASSOCIATED PIPING, DUCTWORK AND CONTROLS IN IT'S ENTIRETY. COORDINATE DEMOLITION WITH G.C. FOR ROOF PATCHING. G.C. TO REMOVE UNIT ROOF CURB AND PATCH ROOF.

2 M-4 MECHANICAL DEMOLITION PLAN - ROOF OVERALL

SCALE: 3/16" = 1'-0"

Client:

16-22 Union Street - Apartment Building

Client: Empire Property Construction
16-22 Union St.
Wilkes-Barre, Pa 18701

Consultants:

DMG
design management group
consulting engineers
570 299 7520
dmgeng.com

CAM architect

CAM architect, LLC
ARCHITECTS | PLANNERS
606 North Main St. Wilkes-Barre, PA 18705
T | 570| 824.3320
F | 570| 606.4966
www.camarchus.com

© 2026 CAM ARCHITECT

Seals:

PRELIMINARY - NOT FOR CONSTRUCTION
THIS DRAWING SET IS ISSUED FOR INFORMATIONAL PURPOSES ONLY AND IS NOT INTENDED FOR CONSTRUCTION OR BIDDING. DO NOT SCALE DRAWINGS. DO NOT BUILD FROM SCALED SHEETS. DO NOT START CONSTRUCTION WITHOUT A SEALED SET OF CONSTRUCTION DOCUMENTS FROM THE ARCHITECT.

Revisions | Issues

No: Date:

Phase:
PERMIT/PRICING

Project: Apartment Building
Date: 06/15/2026
Drawn: SAS Checked: KJS
Scale: AS NOTED
Sheet:
MECHANICAL FLOOR PLANS
M-4

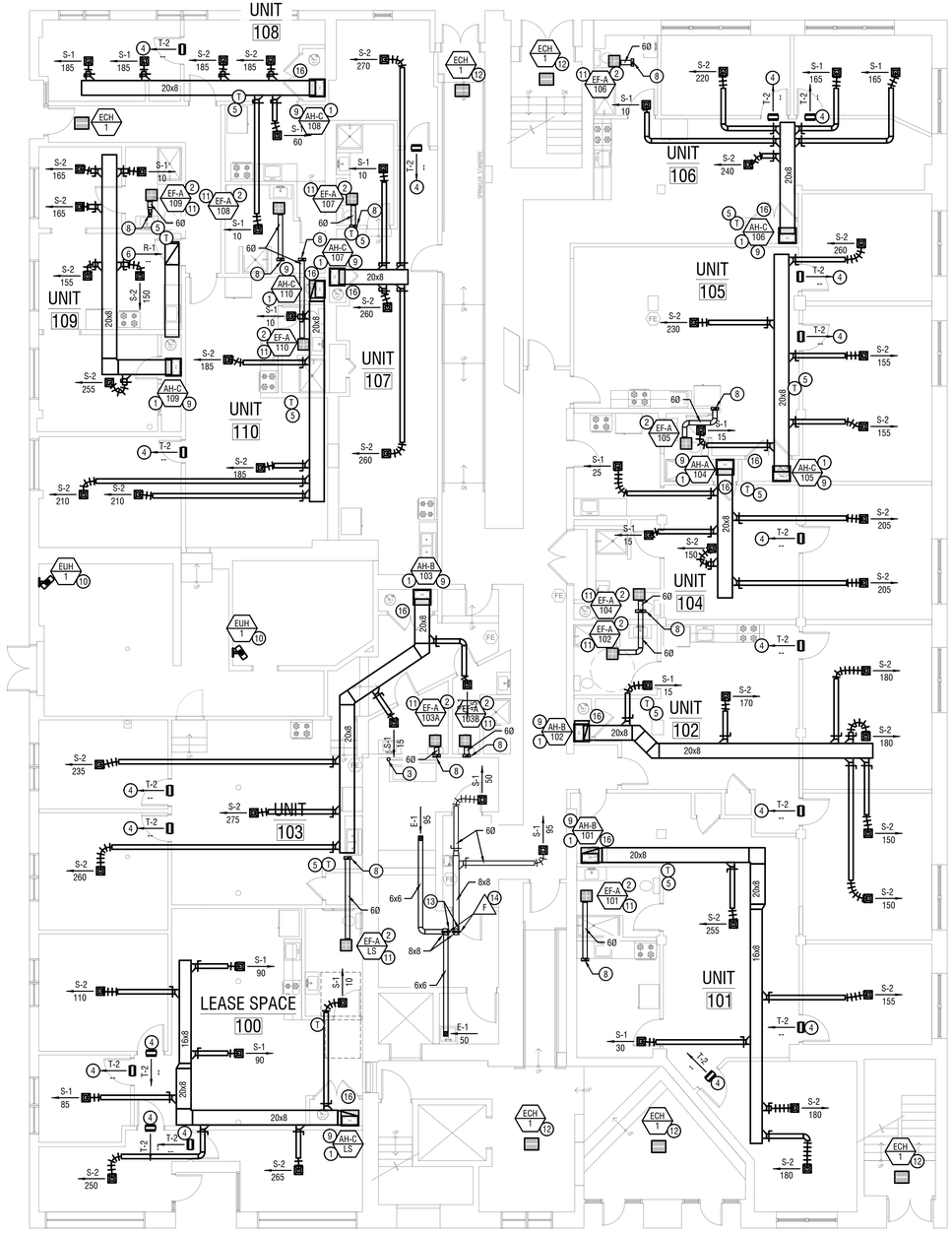

1 M-5 MECHANCIAL PLAN - FIRST FLOOR

SCALE: 1/8"=1'-0"

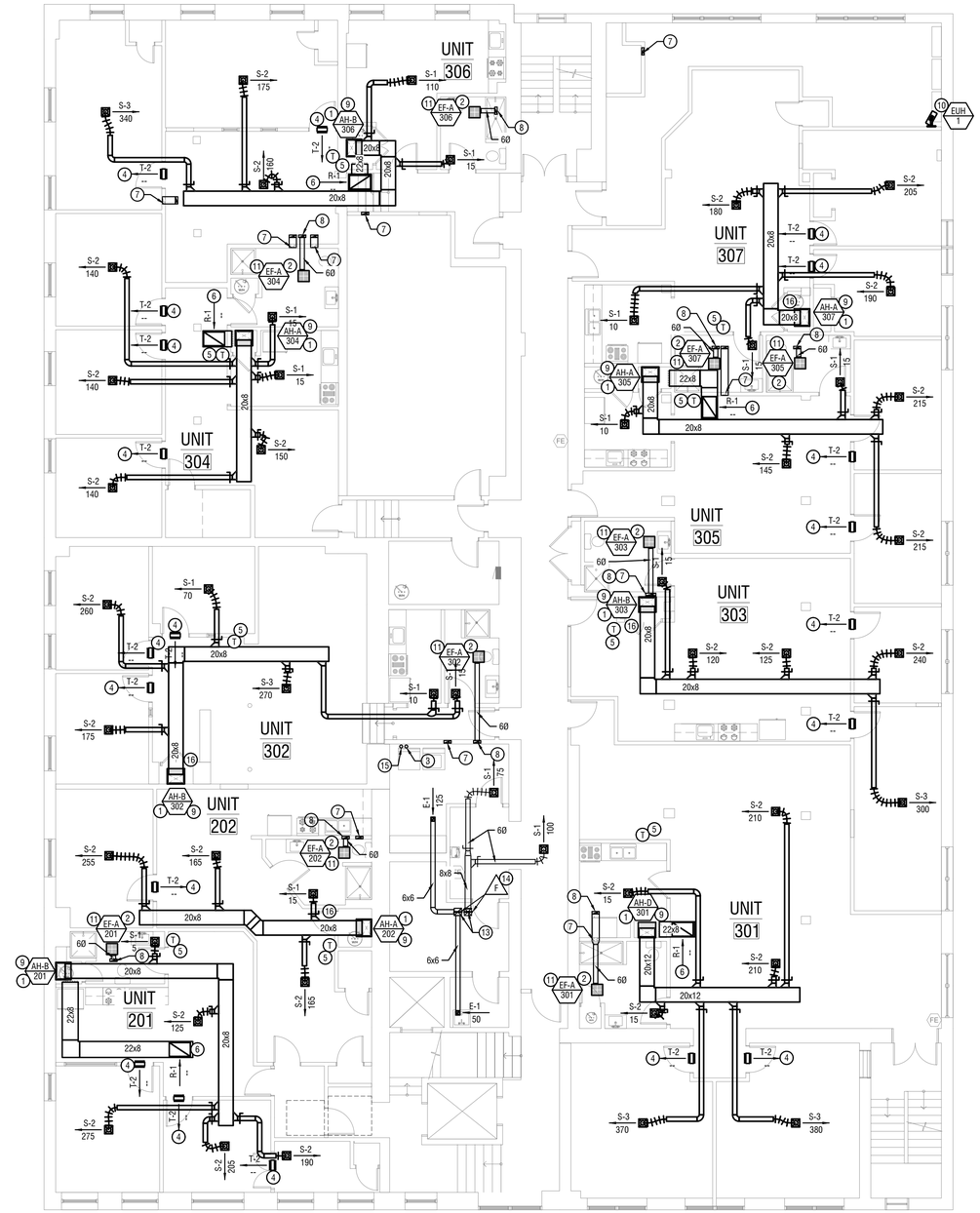

2 M-5 MECHANCIAL PLAN - SECOND FLOOR

SCALE: 1/8"=1'-0"

GENERAL NOTES

1. ALL BATHROOM AND CLOTHES DRYER EXHAUST DUCT TERMINALS TO BE LOCATED 3'-0" OR GREATER FROM OPERABLE BUILDING OPENINGS AND 10'-0" FROM MECHANICAL OUTSIDE AIR INTAKE SOURCES.
2. ALL AIR HANDLER SUPPLY AIR DUCTWORK TO BE INSULATED AND INSTALLED WITHIN THE UL FIRE RATED CEILING/FLOOR/ROOF ASSEMBLY. SEE ARCHITECTURAL DRAWINGS FOR INFORMATION ON CEILINGS AND STRUCTURE.
3. ALL DUCT/GRILLE/EXHAUST FAN PENETRATIONS OF UL FIRE RATED CEILING/FLOOR/ROOF ASSEMBLY IS TO RECEIVE A 1-HOUR RATED CEILING RADIATION DAMPER.
4. COORDINATE FLOOR/WALL ASSEMBLY FIRE RATINGS WITH ARCHITECTURAL DRAWINGS.
5. SEE ALL NOTES ON DRAWING M-1 FOR MANDATED INSTALLATION REQUIREMENTS FOR ALL MECHANICAL MATERIALS, SYSTEMS AND SUB-SYSTEMS.
6. MOUNT ALL SPACE CONTROLS AND THERMOSTATS 48" AFF. MOUNT TEMPERATURE SENSORS AT 60" AFF.
7. ALL DUCT, PIPING AND CONDUIT PENETRATIONS OF WALLS AND FLOORS ARE TO BE FIRE SEALED REGARDLESS OF ASSEMBLY FIRE RATING.
8. ALL APARTMENT RANGE HOODS ASSUMED TO BE RE-CIRCULATION UNITS WITH CHARCOAL AND WASHABLE PRE-FILTERS. PROVIDED BY OTHERS.
9. ALL APARTMENT LOCATED CLOTHES DRYERS ASSUMED TO HAVE AN EXHAUST AIRFLOW RATE LESS THAN 200CFM AND NO MAKE-UP AIR MEANS REQUIRED.
10. THE M.C. SHALL BE RESPONSIBLE TO COORDINATE FINAL SYSTEM COMPONENT LOCATIONS WITH ALL TRADES PRIOR TO INSTALLATION.
11. COORDINATE PLUMBING SANITARY VENT LOCATIONS WITH P.C. TO AVOID PLACING WITHIN 10'-0" OF ANY SOURCE OF HVAC EQUIPMENT OUTSIDE AIR INTAKES OR OPERABLE WINDOWS.

KEYED NOTES

1. PROVIDE AND INSTALL HIGH EFFICIENCY MULTI-POSITION AIR HANDLER WITH INTEGRAL ELECTRIC EMERGENCY HEAT COIL. MOUNT UNIT IN FIELD ON A SHELF BRACKETS OVER DOMESTIC WATER HEATER. SEE SCHEDULES AND DETAILS FOR MORE INFORMATION.
2. PROVIDE BATHROOM CEILING MOUNTED EXHAUST FAN WITH REMOTE OCCUPANCY SENSOR. SEE SCHEDULES AND DETAILS FOR MORE INFORMATION.
3. 4"Ø 26 GA. ALUMINUM SHEET METAL CLOTHES DRYER EXHAUST RISER UP FROM CLOTHES DRYER EXHAUST WALL CONNECTION. PROVIDE ALUMINUM FLEXIBLE DUCT CONNECTION BETWEEN WALL CONNECTION AND CLOTHES DRYER. SECURE FLEXIBLE DUCT CONNECTIONS WITH BAND CLAMPS. SEE CLOTHES DRYER EXHAUST CONNECTION DETAIL FOR MORE INFORMATION ON CLOTHES DRYER EXHAUST CONNECTIONS AND ROUTING. TERMINATE CLOTHES DRYER EXHAUST ON ROOF ABOVE WITH BOOFGOOSEVENT - MODEL# RG4-DRYER (OR EQUAL PRODUCT BY ANOTHER MANUFACTURER). SEE DRYER EXHAUST TERMINATION DETAIL FOR MORE INFORMATION.
4. PROVIDE TRANSFER AIR GRILLE, SLEEVE AND SOUND ATTENUATION ASSEMBLY ABOVE BEDROOM DOOR. MOUNT AS HIGH AS POSSIBLE ON WALL. SEE DETAILS AND SCHEDULES FOR MORE INFORMATION.
5. PROVIDE, MOUNT AND WIRE REMOTE AIR HANDLER PROGRAMMABLE DIGITAL THERMOSTAT. PROGRAM NIGHT SETBACK TO (-5°F) HEATING & (+5°F) COOLING AND HEAT/COOL CHANGEOVER DEADBAND TO 4°F.
6. PROVIDE RETURN AIR GRILLE AT RETURN IN APARTMENT CEILING OR WALL AS SHOWN.
7. EXHAUST DUCT UP FROM FLOOR(S) BELOW WITHIN WALL CAVITY TO ROOF.
8. EXHAUST DUCT UP TO ROOF ABOVE.
9. PROVIDE AND INSTALL INSULATED REFRIGERANT PIPING BETWEEN INDOOR AND OUTDOOR HEAT PUMP UNITS.
10. PROVIDE AND MOUNT ELECTRIC UNIT HEATER WITH INTEGRAL THERMOSTAT. SET THERMOSTATS TO 60°F (ADJ.).
11. CEILING EXHAUST FAN TO RUN CONTINUOUSLY AT LOW SPEED (35CFM) AND AT HIGH SPEED (50CFM) WHEN ACTIVATED BY REMOTE WALL MOUNTED OCCUPANCY SENSOR.
12. PROVIDE AND MOUNT ELECTRIC CEILING HEATER WITH INTEGRAL THERMOSTAT (OR LOW VOLTAGE RELAY & TRANSFORMER). SET THERMOSTATS TO 60°F (ADJ.).
13. ERV-1 EXHAUST AND OUTSIDE AIR DUCTS UP TO FLOOR ABOVE.
14. PROVIDE FIRE DAMPER AT FLOOR PENETRATION. PROVIDE ACCESS DOOR IN DUCT RISER FOR DAMPER SERVICE/INSPECTION.
15. CLOTHES DRYER EXHAUST RISER UP FROM FLOOR(S) BELOW.
16. CLOSET DOORS TO BE LOUVERED FOR RETURN AIR PATH TO AIR HANDLER.

Client:

16-22 Union Street - Apartment Building

Client: Empire Property Construction
16-22 Union St.
Wilkes-Barre, Pa 18701

Consultants:

DMG
design management group
consulting engineers
570 299 7520
dmgeng.com

CAM architect
CAM architect, LLC
ARCHITECTS | PLANNERS
606 North Main St. Wilkes-Barre, PA 18705
T | 570| 824.3320
F | 570| 606.4966
www.camarchus.com

© 2026 CAM ARCHITECT

Seals:

PRELIMINARY - NOT FOR CONSTRUCTION
THIS DOCUMENT IS INTENDED FOR INFORMATIONAL PURPOSES ONLY AND IS NOT INTENDED FOR CONSTRUCTION OR SALE. SUBJECT TO NOTICE CONTAINED IN WRITTEN AGREEMENT BETWEEN CLIENT AND ARCHITECT. OF CONSTRUCTION DOCUMENTS FROM THE ARCHITECT.

Revisions | Issues

No:	Date:

Phase:
PERMIT/PRICING

Project: Apartment Building
Date: 06/15/2026
Drawn: SAS Checked: KJS
Scale: AS NOTED
Sheet:
MECHANICAL FLOOR PLANS
M-5

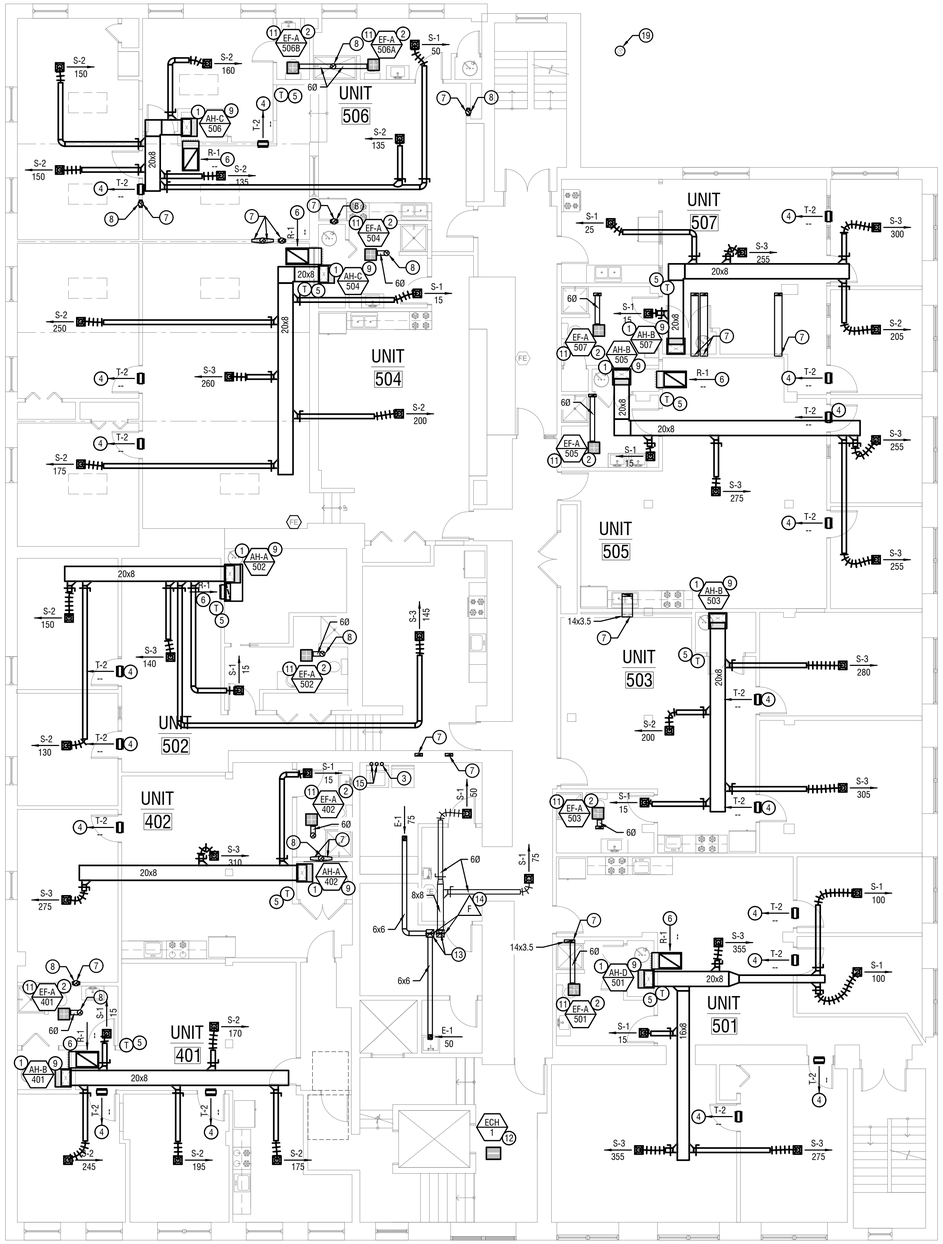

1 M-6 MECHANICAL PLAN - THIRD FLOOR

SCALE: 1/8"=1'-0"

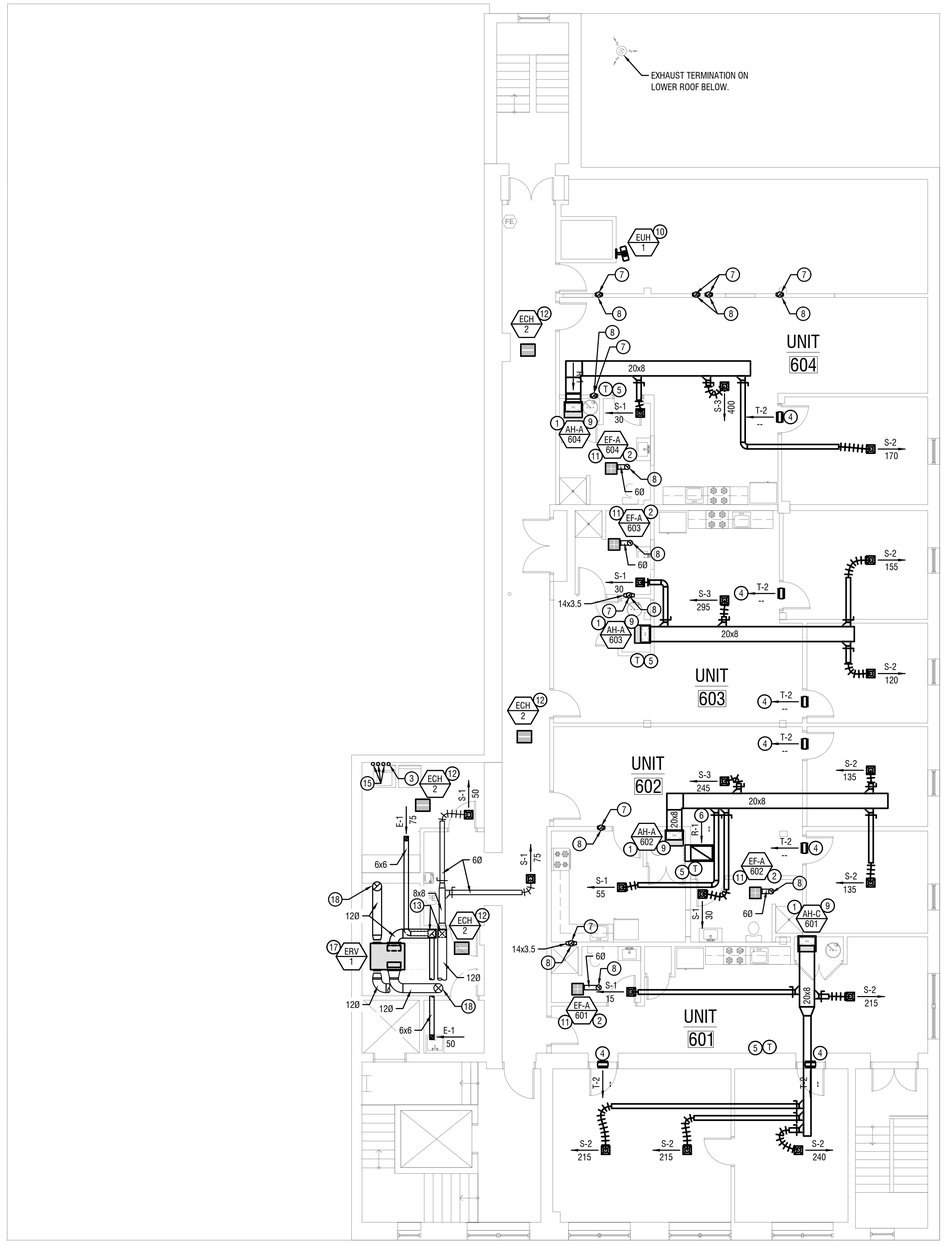

2 M-6 MECHANICAL PLAN - FOURTH FLOOR

SCALE: 1/8"=1'-0"

GENERAL NOTES

1. ALL BATHROOM AND CLOTHES DRYER EXHAUST DUCT TERMINALS TO BE LOCATED 3'-0" OR GREATER FROM OPERABLE BUILDING OPENINGS AND 10'-0" FROM MECHANICAL OUTSIDE AIR INTAKE SOURCES.
2. ALL AIR HANDLER SUPPLY AIR DUCTWORK TO BE INSULATED AND INSTALLED WITHIN THE UL FIRE RATED CEILING/FLOOR/ROOF ASSEMBLY. SEE ARCHITECTURAL DRAWINGS FOR INFORMATION ON CEILINGS AND STRUCTURE.
3. ALL DUCT/GRILLE/EXHAUST FAN PENETRATIONS OF UL FIRE RATED CEILING/FLOOR/ROOF ASSEMBLY IS TO RECEIVE A 1-HOUR RATED CEILING RADIATION DAMPER.
4. COORDINATE FLOOR/WALL ASSEMBLY FIRE RATINGS WITH ARCHITECTURAL DRAWINGS.
5. SEE ALL NOTES ON DRAWING M-1 FOR MANDATED INSTALLATION REQUIREMENTS FOR ALL MECHANICAL MATERIALS, SYSTEMS AND SUB-SYSTEMS.
6. MOUNT ALL SPACE CONTROLS AND THERMOSTATS 48" AFF. MOUNT TEMPERATURE SENSORS AT 60" AFF.
7. ALL DUCT, PIPING AND CONDUIT PENETRATIONS OF WALLS AND FLOORS ARE TO BE FIRE SEALED REGARDLESS OF ASSEMBLY FIRE RATING.
8. ALL APARTMENT RANGE HOODS ASSUMED TO BE RE-CIRCULATION UNITS WITH CHARCOAL AND WASHABLE PRE-FILTERS. PROVIDED BY OTHERS.
9. ALL APARTMENT LOCATED CLOTHES DRYERS ASSUMED TO HAVE AN EXHAUST AIRFLOW RATE LESS THAN 200CFM AND NO MAKE-UP AIR MEANS REQUIRED.
10. THE M.C. SHALL BE RESPONSIBLE TO COORDINATE FINAL SYSTEM COMPONENT LOCATIONS WITH ALL TRADES PRIOR TO INSTALLATION.
11. COORDINATE PLUMBING SANITARY VENT LOCATIONS WITH P.C. TO AVOID PLACING WITHIN 10'-0" OF ANY SOURCE OF HVAC EQUIPMENT OUTSIDE AIR INTAKES OR OPERABLE WINDOWS.

KEYED NOTES

1. PROVIDE AND INSTALL HIGH EFFICIENCY MULTI-POSITION AIR HANDLER WITH INTEGRAL ELECTRIC EMERGENCY HEAT COIL. MOUNT UNIT IN FIELD ON A SHELF BRACKETS OVER DOMESTIC WATER HEATER. SEE SCHEDULES AND DETAILS FOR MORE INFORMATION.
2. PROVIDE BATHROOM CEILING MOUNTED EXHAUST FAN WITH REMOTE OCCUPANCY SENSOR. SEE SCHEDULES AND DETAILS FOR MORE INFORMATION.
3. 4"Ø 26 GA. ALUMINUM SHEET METAL CLOTHES DRYER EXHAUST RISER UP FROM CLOTHES DRYER EXHAUST WALL CONNECTION. PROVIDE ALUMINUM FLEXIBLE DUCT CONNECTION BETWEEN WALL CONNECTION AND CLOTHES DRYER. SECURE FLEXIBLE DUCT CONNECTIONS WITH BAND CLAMPS. SEE CLOTHES DRYER EXHAUST CONNECTION DETAIL FOR MORE INFORMATION ON CLOTHES DRYER EXHAUST CONNECTIONS AND ROUTING. TERMINATE CLOTHES DRYER EXHAUST ON ROOF ABOVE WITH ROOFGOOSEVENT - MODEL# RG4-DRYER (OR EQUAL PRODUCT BY ANOTHER MANUFACTURER). SEE DRYER EXHAUST TERMINATION DETAIL FOR MORE INFORMATION.
4. PROVIDE TRANSFER AIR GRILLE, SLEEVE AND SOUND ATTENUATION ASSEMBLY ABOVE BEDROOM DOOR. MOUNT AS HIGH AS POSSIBLE ON WALL. SEE DETAILS AND SCHEDULES FOR MORE INFORMATION.
5. PROVIDE, MOUNT AND WIRE REMOTE AIR HANDLER PROGRAMMABLE DIGITAL THERMOSTAT, PROGRAM NIGHT SETBACK TO (-5°F) HEATING & (+5°F) COOLING AND HEAT/COOL CHANGEOVER DEADBAND TO 4°F.
6. PROVIDE RETURN AIR GRILLE AT RETURN IN APARTMENT CEILING OR WALL AS SHOWN.
7. EXHAUST DUCT UP FROM FLOOR(S) BELOW WITHIN WALL CAVITY TO ROOF. RISER IS 10x3.5 UNLESS OTHERWISE NOTED.
8. TRANSITION TO 7"Ø EXHAUST DUCT UP TO ROOF ABOVE.
9. PROVIDE AND INSTALL INSULATED REFRIGERANT PIPING BETWEEN INDOOR AND OUTDOOR HEAT PUMP UNITS.
10. PROVIDE AND MOUNT ELECTRIC UNIT HEATER WITH INTEGRAL THERMOSTAT. SET THERMOSTATS TO 60°F (ADJ.).
11. CEILING EXHAUST FAN TO RUN CONTINUOUSLY AT LOW SPEED (35CFM) AND AT HIGH SPEED (50CFM) WHEN ACTIVATED BY REMOTE WALL MOUNTED OCCUPANCY SENSOR.
12. PROVIDE AND MOUNT ELECTRIC CEILING HEATER WITH INTEGRAL THERMOSTAT (OR LOW VOLTAGE RELAY & TRANSFORMER). SET THERMOSTATS TO 60°F (ADJ.).
13. ERV-1 EXHAUST AND OUTSIDE AIR DUCTS UP/DOWN TO FLOOR ABOVE/BELOW.
14. PROVIDE FIRE DAMPER AT FLOOR PENETRATION. PROVIDE ACCESS DOOR IN DUCT RISER FOR DAMPER SERVICE/INSPECTION.
15. CLOTHES DRYER EXHAUST RISER UP FROM FLOOR(S) BELOW.
16. CLOSET DOORS TO BE LOUVERED FOR RETURN AIR PATH TO AIR HANDLER.
17. PROVIDE AND INSTALL ENERGY RECOVERY VENTILATOR (ERV-1) FOR THE COMMON AREAS INCLUDING DUCTWORK, AIR TERMINAL DEVICES, FLEX DUCT, HANGERS, VIBRATION ISOLATORS, CONTROLS & CONTROLS WIRING FOR A COMPLETE AND OPERABLE CODE COMPLIANT SYSTEM.
18. TERMINATE ERV-1 OUTSIDE & EXHAUST AIR DUCTS THROUGH ROOF. MAINTAIN MINIMUM 10'-0" BETWEEN INTAKE AND EXHAUST TERMINATIONS.
19. 7"Ø BATHROOM EXHAUST FAN ROOF TERMINATIONS. SEE DETAILS FOR MORE INFORMATION. MAINTAIN MINIMUM 10'-0" BETWEEN INTAKE AND EXHAUST TERMINATIONS.

Client:

16-22 Union Street - Apartment Building

Client: Empire Property Construction
16-22 Union St.
Wilkes-Barre, Pa 18701

Consultants:

DMG
design management group
consulting engineers
570 299 7520
dmgeng.com

CAM architect
CAM architect, LLC
ARCHITECTS | PLANNERS
606 North Main St. Wilkes-Barre, PA 18705
T | 570| 824.3320
F | 570| 606.4966
www.camarchus.com

© 2026 CAM ARCHITECT

Seals:

PRELIMINARY - NOT FOR CONSTRUCTION
THIS DOCUMENT IS PRELIMINARY IN NATURE AND IS PROVIDED FOR REVIEW PURPOSES ONLY. IT IS NOT INTENDED FOR CONSTRUCTION OR BIDDING. DO NOT START CONSTRUCTION WITHOUT A SEALED SET OF CONSTRUCTION DOCUMENTS FROM THE ARCHITECT OF CONSTRUCTION DOCUMENTS FROM THE ARCHITECT.

Revisions | Issues

No:	Date:

Phase:
PERMIT/PRICING

Project: Apartment Building
Date: 06/15/2026
Drawn: SAS Checked: KJS
Scale: AS NOTED
Sheet:
MECHANICAL FLOOR PLANS
M-6

GENERAL NOTES

1. ALL BATHROOM AND CLOTHES DRYER EXHAUST DUCT TERMINALS TO BE LOCATED 3'-0" OR GREATER FROM OPERABLE BUILDING OPENINGS AND 10'-0" FROM MECHANICAL OUTSIDE AIR INTAKE SOURCES.
2. COORDINATE FLOOR/WALL ASSEMBLY FIRE RATINGS WITH ARCHITECTURAL DRAWINGS.
3. SEE ALL NOTES ON DRAWING M-1 FOR MANDATED INSTALLATION REQUIREMENTS FOR ALL MECHANICAL MATERIALS, SYSTEMS AND SUB-SYSTEMS.
4. ALL DUCT, PIPING AND CONDUIT PENETRATIONS OF WALLS AND FLOORS ARE TO BE FIRE SEALED REGARDLESS OF ASSEMBLY FIRE RATING.

KEYED NOTES

1. CLOTHES DRYER EXHAUST TERMINATION GOOSENECK ASSEMBLY FROM BELOW. PROVIDE AND INSTALL ASSEMBLY WITH COUNTER FLASHING/SLEEVE & METAL SUPPORT BRACKET BY ROOFGOOSEVENT - MODEL# RG4-DRYER. INSTALL PER MANUFACTURER'S INSTRUCTIONS. SEE DETAILS FOR MORE INFORMATION.
2. 7"Ø BATHROOM EXHAUST ROOF TERMINATION. SEE DETAIL FOR MORE INFORMATION.
3. PROVIDE AND INSTALL SPLIT SYSTEM HEAT PUMP OUTDOOR UNIT. MOUNT UNIT ON ACCESSORY 18" HIGH "QUICK-SLING" STANDS BY UNIT MANUFACTURER. SEE SCHEDULES AND DETAILS FOR MORE INFORMATION.
4. PROVIDE AND INSTALL PIPE AND ELECTRICAL CONDUIT PORTAL CURB FOR SPLIT SYSTEM REFRIGERANT PIPING AND ELECTRICAL CONDUITS. SEE DETAILS FOR MORE INFORMATION.
5. PROVIDE AND INSTALL SPLIT SYSTEM REFRIGERANT LIQUID AND SUCTION PIPING TO/FROM OUTDOOR UNIT TO/FROM INDOOR UNITS. SEE SCHEDULES FOR REFRIGERANT PIPING SIZES.
6. 12"Ø ERV-1 INTAKE/EXHAUST ROOF TERMINATION. SEE DETAIL FOR MORE INFORMATION.

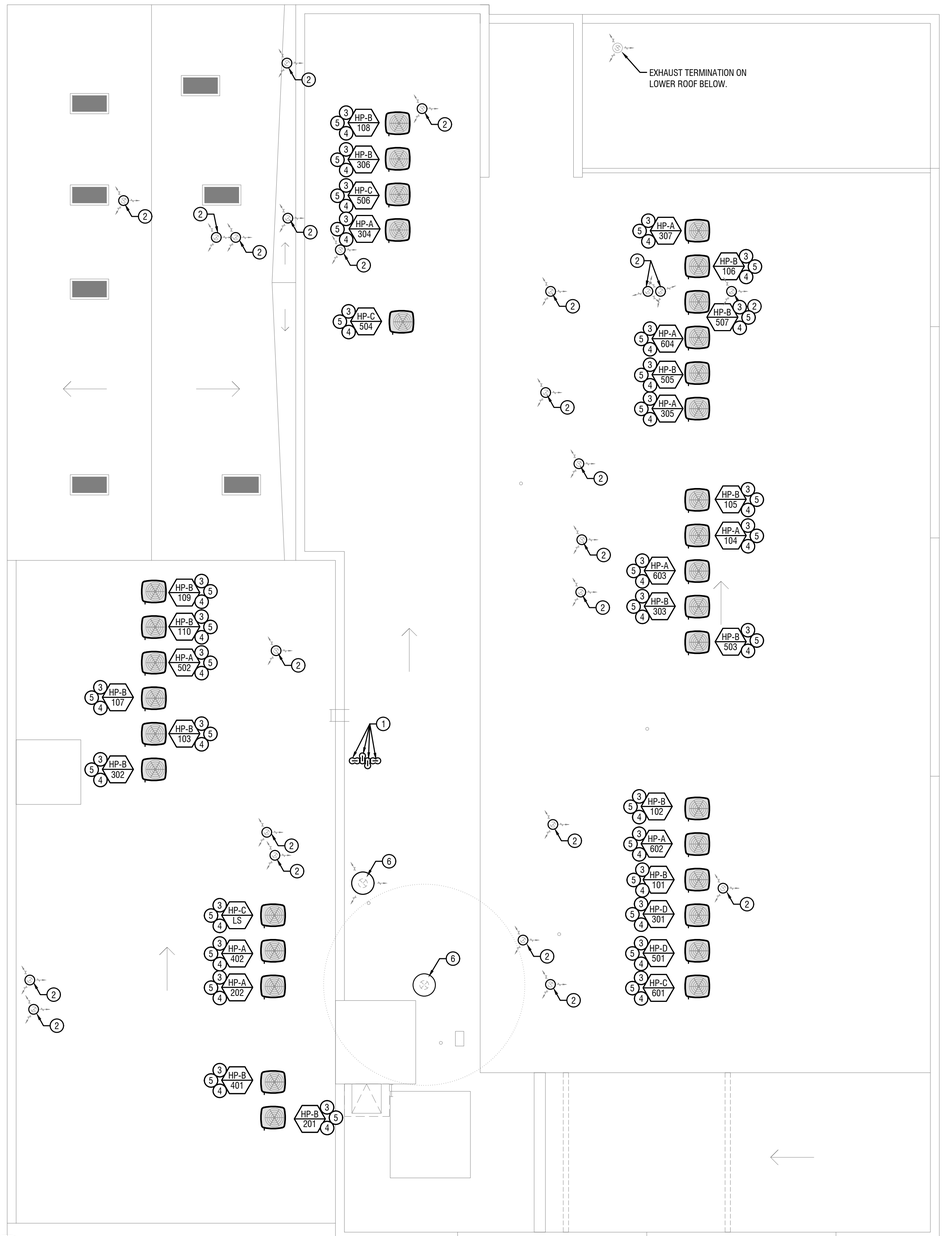

1 M-7 MECHANCIAL PLAN - ROOF OVERALL

SCALE: 1/8"=1'-0"

Client:

16-22 Union Street - Apartment Building

Client: Empire Property Construction
16-22 Union St.
Wilkes-Barre, Pa 18701

Consultants:

DMG
design management group
consulting engineers
570 299 7520
dmgeng.com

CAM architect
CAM architect, LLC
ARCHITECTS | PLANNERS
606 North Main St. Wilkes-Barre, PA 18705
T | 570| 824.3320
F | 570| 606.4964
www.camarchus.com

© 2026 CAM ARCHITECT

Seals:

PRELIMINARY - NOT FOR CONSTRUCTION
THIS COMPUTER FILE WAS PREPARED FOR THE OFFICE USE ONLY AND IS NOT INTENDED FOR CONSTRUCTION PURPOSES. AS AN INSTRUMENT OF SERVICE, IT IS PROVIDED BY A SEALED SET OF NO STAMP CONSTRUCTION DOCUMENTS FROM THE ARCHITECT OF CONSTRUCTION DOCUMENTS FROM THE ARCHITECT

Revisions | Issues

No: Date:

Phase:
PERMIT/PRICING

Project: Apartment Building
Date: 06/15/2026
Drawn: SAS Checked: KJS
Scale: AS NOTED
Sheet:
MECHANICAL FLOOR PLANS

M-7

NATURAL VENTIALTION CALCULATIONS (2018 IMC 403.3.2.1 OUTDOOR AIR FOR DWELLING UNITS)

UNIT/AREA	FLOOR AREA (SQ.FT.)	NUMBER OF BEDROOMS	MINIMUM CONTINUOUS EXHAUST/VENTILATION AIR REQUIRED (0.01(AREA)+7.5(# OF BEDROOMS+1)
FIRST FLOOR			
UNIT 101	1248.6	2	34.986
UNIT 102	1059.1	2	33.091
UNIT 103	1162.2	2	34.122
UNIT 104	716.4	1	22.164
UNIT 105	1132	2	33.82
UNIT 106	1118.1	2	33.681
UNIT 107	772.6	1	22.726
UNIT 108	549.4	1	20.494
UNIT 109	556.4	1	20.564
UNIT 110	746.1	1	22.461
UNIT 111	1247.9	2	34.979
SECOND FLOOR			
UNIT 201	860.4	2	31.104
UNIT 202	806.8	1	23.068
UNIT 301	1903.4	2	41.534
UNIT 302	1218.6	3	42.186
UNIT 303	1099.8	2	33.498
UNIT 304	1141.5	3	41.415
UNIT 305	1033.4	2	32.834
UNIT 306	1302.8	2	35.528
UNIT 307	1232.4	2	34.824
THIRD FLOOR			
UNIT 401	995.2	2	32.452
UNIT 402	798.6	1	22.986
UNIT 501	1553.6	3	45.536
UNIT 502	1248.1	2	34.981
UNIT 503	1149.3	2	33.993
UNIT 504	1750.9	2	40.009
UNIT 505	1059.9	2	33.099
UNIT 506	1300.1	2	35.501
UNIT 507	952.9	2	32.029
FOURTH FLOOR			
UNIT 601	1230.8	2	34.808
UNIT 602	1033.9	2	32.839
UNIT 603	977.4	2	32.274
UNIT 604	937.3	1	24.373

NOTES:
1. ONLY NET OCCUPIED SPACES ARE CONSIDERED IN THESE CALCULATIONS.
2. BATHROOM CEILING EXHAUST FAN TO BE 2-SPEED WITH THE CONTINUOUS MINIMUM FLOW SHOWN ABOVE.

INDOOR AIR HANDLER SCHEDULE (DX & ELEC)

TAG NO.	BASIS OF DESIGN		AREA SERVED	INDOOR SECTION											ELECTRICAL DATA			SEER2	NOTES
	MANUFACTURER	MODEL		TOTAL CFM	MIN. OA CFM	ESP (IN. WC)	FAN HP	DX COOLING					ELECTRIC HEATING		MCA	MOCP	VOLTS/ PH/Hz		
								TOTAL MBH	SENS MBH	STAGES	PIPE SIZE SUC.	PIPE SIZE LIQ.	KW	STAGES					
AH-A	TRANE	5TAM5B01AC21	APARTMENT UNITS	600	75	0.5	-	18.8	13.6	1	3/4"	5/16"	5.77	1	43.0	45	208/1/60	14.3	1,2,4,5,6
AH-B	TRANE	5TAM5B01AC21	APARTMENT UNITS	800	75	0.5	-	23.5	17.4	1	3/4"	3/8"	7.21	1	53.0	60	208/1/60	14.3	1,2,4,5,6
AH-C	TRANE	5TEM6B03AV21	APARTMENT UNITS	900	75	0.5	1/2	26.5	18.9	1	3/4"	3/8"	7.21	1	53.0	60	208/1/60	14.3	1,2,4,5,6
AH-D	TRANE	5TEM6D04AV31	APARTMENT UNITS	1200	75	0.5	1/2	33.6	26.2	1	7/8"	3/8"	10.8	2	49.0/22.0	50/25	208/1/60	14.3	1,3,4,5,6
AH-E	TRANE	5TEM6D04AV31	APARTMENT UNITS	1350	75	0.5	1/2	39.2	28.2	1	7/8"	3/8"	14.4	2	49.0/43.0	50/45	208/1/60	14.3	1,3,4,5,6

NOTES:
1. SCHEDULED CAPACITIES ARE BASED ON 95°F AMBIENT AIR TEMPERATURE AND 50 FT. OF MANUFACTURER RECOMMENDED SIZE PRECHARGE REFRIGERANT TUBING
2. PROVIDE WITH ELECTRIC HEAT KIT. CAPACITIES AS SCHEDULED. UNITS TO HAVE SINGLE POINT POWER CONNECTION INCLUDING AIR HANDLER AND ELECTRIC HEAT KIT.
3. PROVIDE WITH (2) CIRCUIT HIGH CAPACITY ELECTRIC HEAT KIT. CAPACITIES AS SCHEDULED. UNITS TO HAVE DUAL POINT POWER CONNECTION INCLUDING AIR HANDLER AND ELECTRIC HEAT KIT.
4. PROVIDE WITH SUB-BASE FOR UP-FLOW CONFIGURATION WITH 2" FILTER RACK AND MERV 8 FILTER.
5. PROVIDE 4H/2C PROGRAMMABLE THERMOSTAT.
6. PROVIDE EQUIPMENT STAND, 2" DISPOSABLE FILTERS AND FILTER RACK.

HEAT PUMP SCHEDULE

TAG NO.	BASIS OF DESIGN		LOCATION	AREA SERVED	HEATING CAPACITY MBH*	COOLING CAPACITY MBH*	EFFICIENCY			HEATING	REFRIGERANT		VOLTS/ PH/Hz	ELECTRICAL		NOTES
	MANUFACTURER	MODEL					COOLING SEER2	HEATING COP @ 47°F	HEATING COP @ 17°F	MBH @ IAT 70°F/ OAT 17°F	TYPE	CONNECTION SIZE (L/S) INCHES		MCA	MOCP	
HP-A	TRANE	5TWR4018A1	ROOF	APARTMENT UNITS	17.7	18.8	14.3	3.6	2.5	11.5	R-454B	5/16 - 3/4	208/1/60	12	20	1,2
HP-B	TRANE	5TWR4024A1	ROOF	APARTMENT UNITS	22.0	23.5	14.3	3.6	2.4	14.4	R-454B	3/8 - 3/4	208/1/60	13	20	1,2
HP-C	TRANE	5TWR4030A1	ROOF	APARTMENT UNITS	26.2	26.5	14.3	4.0	2.7	17.4	R-454B	5/16 - 3/4	208/1/60	16	25	1,2
HP-D	TRANE	5TWR4036A1	ROOF	APARTMENT UNITS	31.6	33.6	14.3	4.0	2.7	20.8	R-454B	3/8 - 3/4	208/1/60	19	30	1,2
HP-E	TRANE	5TWR4042A1	ROOF	APARTMENT UNITS	39.0	39.2	14.3	4.1	2.8	24.6	R-454B	3/8 - 3/4	208/1/60	24	40	1,2

NOTES:
* ARI COOLING CAPACITIES ARE BASED ON 80°F DB AND 67°F WB ENTERING AIR TEMPERATURE AND 95°F OUTDOOR AMBIENT TEMPERATURE. HEATING BASED ON 70°F INDOOR AND 47°F OUTDOOR.
1. INSTALL IN ACCORDANCE WITH MANUFACTURER'S INSTRUCTIONS. COORDINATE WITH ALL OTHER TRADES.
2. PROVIDE UNIT WITH THE FOLLOWING OPTIONS AND ACCESSORIES:
18" HIGH SNOW STANDS, DISCONNECT SWITCH, FREEZESTAT, LOW AMBIENT KIT TO 0°F, HARD START KIT, OUTDOOR THERMOSTAT, CRANKCASE HEATERS AND ALL NECESSARY FACTORY CONTROLS.

FAN SCHEDULE

TAG NO.	BASIS OF DESIGN		AREA SERVED	FAN TYPE	MOUNTING	DRIVE	CFM	ESP (IN)	RPM	MOTOR HP OR WATTS	SONES	VOLTS/ PH/Hz	FLA	MCA	MOCP	WALL/ROOF OPENING (IN)	NOTES
	MANUFACTURER	MODEL															
EF-A	GREENHECK	SP-ALP0511W-1	RESTROOMS/ BATHROOMS	CEILING	SUSPENDED	DIRECT	35/50	0.25	828	-	0.7	115/1/60	0.29	0.5	15	4"Ø	1,2

NOTES:
1. ALL FANS TO OPERATE AT AMCA-RATED 3 SONES OR LESS.
2. PROVIDE COMPLETE WITH STANDARD GRILLE, CONSTANT CFM EC MOTOR RATED FOR CONTINUOUS USE AND 2-SPEED CAPABLE, MOTION DETECTOR (WALL MOUNTED), BACKDRAFT DAMPER, STANDARD WALL CAP, PLUG TYPE DISCONNECT AND TELESCOPING MOUNTING RAILS. PROVIDE CEILING RADIATION DAMPERS FOR ALL FANS INSTALLED IN UL FIRE RATED CEILING/FLOOR/ROOF ASSEMBLIES.

ENERGY RECOVERY VENTILATOR SCHEDULE

TAG NO.	QTY.	BASIS OF DESIGN		SUPPLY FAN				ENTERING OUTDOOR AIR CONDITIONS				EXHAUST FAN				DESIGN ROOM AIR CONDITIONS				LEAVING VENTILATION AIR CONDITIONS				TOTAL EFFECTIVENESS % (HEATING / COOLING)	ELECTRIC HEAT	ELECTRICAL			WEIGHT (LBS)	NOTES
		MANUFACTURER	MODEL	AIRFLOW (CFM)	ESP (IN W.C.)	RPM	HP	SUMMER (DB/WB).	WINTER (DB/WB)	ENTHALPY (COOLING)	ENTHALPY (HEATING)	AIRFLOW (CFM)	ESP (IN W.C.)	RPM	HP	SUMMER (DB/WB)	WINTER (DB/WB)	ENTHALPY (COOLING)	ENTHALPY (HEATING)	SUMMER (DB/WB)	WINTER (DB/WB)	ENTHALPY (COOLING)	ENTHALPY (HEATING)			MCA	MOCP	VOLTS/ PH/Hz		
ERV-1	1	GREENHECK	Minivent-750-VG	570	0.5	1040	3/4	95.0 / 75.0	0.0 / -1.6	39.1	0.4	570	0.5	1128	3/4	75 / 62.4	72 / 55.6	28.5	23.9	78.7 / 65.3	57.0 / 46.5	30.7	18.6	79.6 / 78	N/A	20.5	25	115/1/60	250	1,2

NOTES:
1. PROVIDE WITH 2" MERV 8 FILTERS BOTH AIRSTREAMS, TIMED EXHAUST DEFROST CONTROL, DIRECT DRIVE FANS W/ SPEED DIALS, SINGLE POINT POWER CONNECTION, DISCONNECT SWITCH, GALVANIZED FINISHED SINGLE WALL INSULATED CABINET W/ BOLTED ACCESS DOORS, CONTROLS TERMINAL BLOCKS, GRAVITY DAMPERS WITH END SWITCHES AND NEOPRENE HANGING VIBRATION ISOLATORS..
2. UNIT TO RUN CONTINUOUSLY.

ELECTRIC HEATER SCHEDULE

TAG NO.	BASIS OF DESIGN		AREA SERVED	TYPE	MOUNTING	CFM	KW	AMP	VOLTS/ PH/Hz	THERMOSTAT	DIMENSIONS WxHxD (IN)	NOTES
	MANUFACTURER	MODEL										
EWH-1	QMARK	QCH1151F	ENTRYS	CEILING	SURFACE	65	1.5	12.5	120/1/60	INTERGAL	10x12x5	1,2
EWH-2	QMARK	QCH1101F	COMMON AREAS	CEILING	SURFACE	65	0.5	4.7	120/1/60	INTEGRAL	10x12x5	1,2

NOTES:
1. INSTALL IN ACCORDANCE WITH MANUFACTURER'S WRITTEN INSTRUCTIONS. COORDINATE INSTALLATION WITH ALL OTHER TRADES.
2. PROVIDE COMPLETE WITH UNIT MOUNTED DISCONNECT SWITCH AND TAMPERPROOF THERMOSTAT, INTERNAL WIRING, AND SURFACE MOUNT EXTENSION FRAME ACCESSORIES.

ELECTRIC UNIT HEATER SCHEDULE

TAG NO.	BASIS OF DESIGN		AREA SERVED	TYPE	MOUNTING	CFM	KW	AMP	VOLTS/ PH/Hz	THERMOSTAT	DIMENSIONS WxHxD (IN)	NOTES
	MANUFACTURER	MODEL										
EUH-1	QMARK	CHPR25	MECHANICAL/STORAGE	UNIT	WALL/CEILING BRACKET	150	2.5	10.7	240/1/60	INTEGRAL	14x12.5x14	1,2

NOTES:
1. INSTALL IN ACCORDANCE WITH MANUFACTURER'S WRITTEN INSTRUCTIONS. COORDINATE INSTALLATION WITH ALL OTHER TRADES.
2. PROVIDE COMPLETE WITH DISCONNECT SWITCH, WALL BRACKET, AND INTEGRAL THERMOSTAT.

DIFFUSER, GRILLE, AND REGISTER SCHEDULE

TAG	CFM	BASIS OF DESIGN		TYPE	THROW T150-T100-T50 (FT)	NECK SIZE (IN)	MODULE SIZE (IN)	MAX. NC LEVEL	MAX. SP LEVEL	NOTES
		MANUFACTURER	MODEL							
S-1	0-100	PRICE	SMD	LOUVERED DIRECTIONAL DIFFUSER	6-9-13	6x6x6Ø	12 SQ.	25	0.10	1,2,3,4,5
S-2	101-250	PRICE	SMD	LOUVERED DIRECTIONAL DIFFUSER	5-8-14	9x9x6Ø	12 SQ.	25	0.10	1,2,3,4,5
S-3	251-400	PRICE	SMD	LOUVERED DIRECTIONAL DIFFUSER	7-10-17	12x12x10Ø	15 SQ.	25	0.10	1,2,3,4,5
R-1	0-1500	PRICE	530	3/4" LOUVERED RETURN GRILLE	N/A	20x30	22x32	25	0.10	1,2,3,4,5
T-2	0-270	TAMTECH	RAP	LOUVERED GRILLE W/ SOUND ATTENUATOR	N/A	14x8	16x10	25	0.10	1,3

NOTES:
1. INSTALL IN ACCORDANCE WITH MANUFACTURER WRITTEN INSTRUCTIONS. COORDINATE WITH ALL TRADES.
2. PROVIDE FACTORY INSTALLED OPPOSED BLADE DAMPER. PROVIDE CEILING RADIATION DAMPERS FOR ALL INSTALLATIONS IN A UL LISTED FIRE RATED CEILING/FLOOR/ROOF ASSEMBLY.
3. COORDINATE MOUNTING HARDWARE WITH ARCHITECTURAL CEILING AND WALL FINISHES
4. DUCT RUNNOUT SIZES SHALL MATCH DIFFUSER OR GRILLE CONNECTION DIMENSIONS UNLESS OTHERWISE NOTED.
5. PROVIDE WITH SQUARE TO ROUND ADAPTER.

Client:
16-22 Union Street - Apartment Building
Client: Empire Property Construction
16-22 Union St.
Wilkes-Barre, Pa 18701

Consultants:
DMG
design management group
consulting engineers
570 299 7520
dmgeng.com

CAM architect
CAM architect, LLC
ARCHITECTS | PLANNERS
606 North Main St. Wilkes-Barre, PA 18705
T | 570| 824-3320
F | 570| 606-4966
www.camarchus.com

© 2026 CAM ARCHITECT

Seals:
PRELIMINARY - NOT FOR CONSTRUCTION
THIS DOCUMENT IS ISSUED FOR INFORMATION PURPOSES ONLY AND IS NOT INTENDED FOR CONSTRUCTION OR BIDDING. DO NOT START WORK BASED ON THIS DOCUMENT. A SEALED SET OF CONSTRUCTION DOCUMENTS FROM THE ARCHITECT OF CONSTRUCTION DOCUMENTS FROM THE ARCHITECT.

Revisions | Issues
No: Date:

Phase:
PERMIT/PRICING

Project: Apartment Building
Date: 06/15/2026
Drawn: SAS Checked: KJS
Scale: AS NOTED
Sheet:
MECHANICAL SCHEDULES
M-8

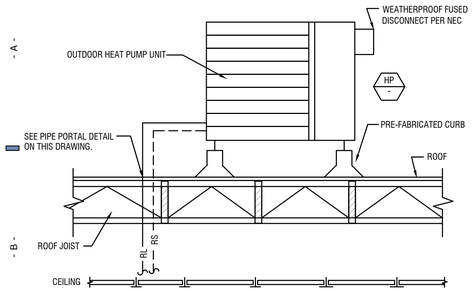

1 M-9 SPLIT SYSTEM HEAT PUMP UNIT INSTALLATION DETAIL
SCALE: NTS

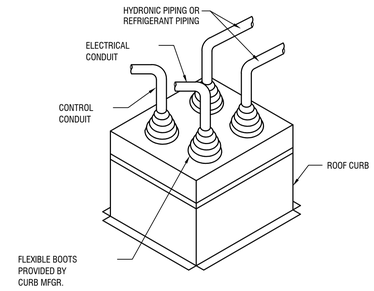

2 M-9 PIPING PORTAL THRU ROOF DETAIL
SCALE: NTS

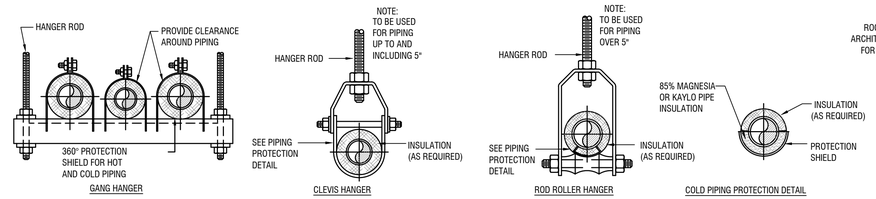

3 M-9 HVAC PIPE SUPPORT DETAIL
SCALE: NTS

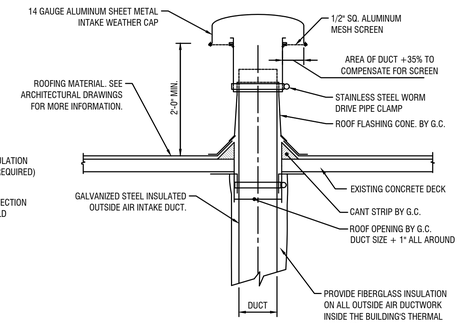

4 M-9 TYP. OUTSIDE AIR INTAKE THRU ROOF DETAIL
SCALE: NTS

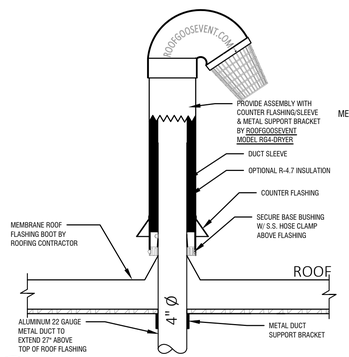

5 M-902 ROOF DRYER VENTING PENETRATION DETAIL
SCALE: NTS

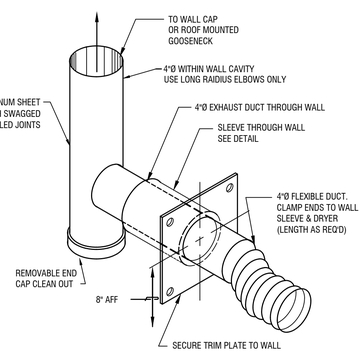

6 M-9 RESIDENTIAL DRYER CONNECTION DETAIL
SCALE: NTS

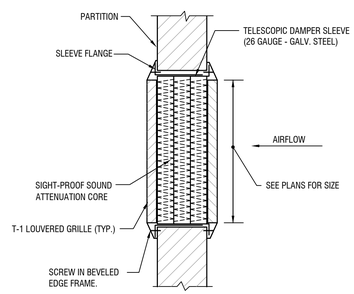

7 M-9 TRANSFER GRILLE DETAIL
SCALE: NTS

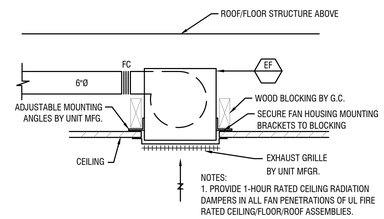

8 M-9 CEILING EXHAUST FAN DETAIL (EF-A)
SCALE: NTS

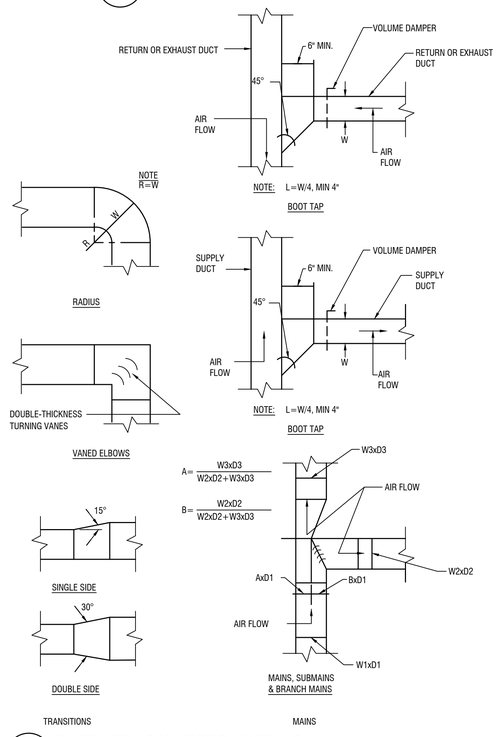

13 M-9 DUCTWORK CONNECTION DETAILS
SCALE: NTS

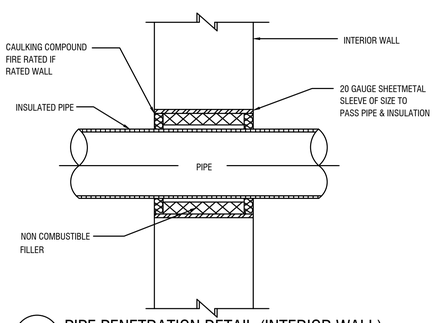

9 M-901 PIPE PENETRATION DETAIL (INTERIOR WALL)
SCALE: NTS

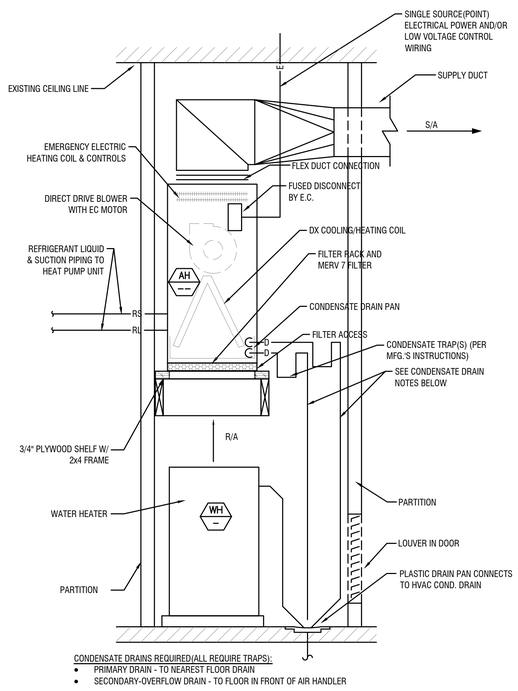

11 M-9 TYPICAL VERTICAL AIR HANDLER CONFIGURATION (AH-A,B,C,D & E)
SCALE: NTS

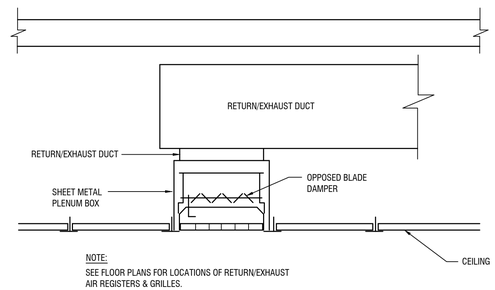

12 M-9 RETURN/EXHAUST AIR GRILLE DUCT DETAIL
SCALE: NTS

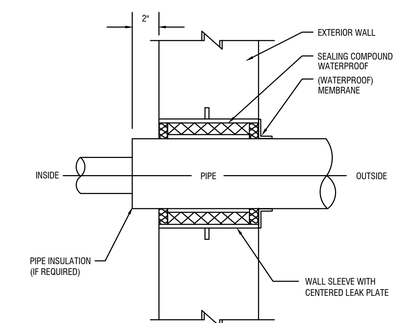

10 M-901 PIPE PENETRATION DETAIL (EXTERIOR WALL)
SCALE: NTS

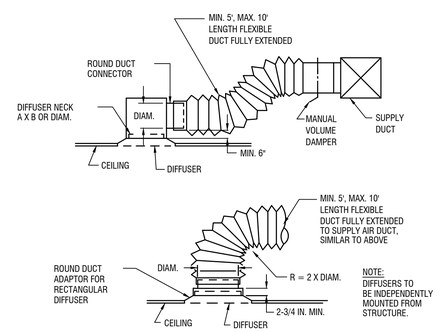

14 M-9 DIFFUSER CONNECTION DETAILS
SCALE: NTS

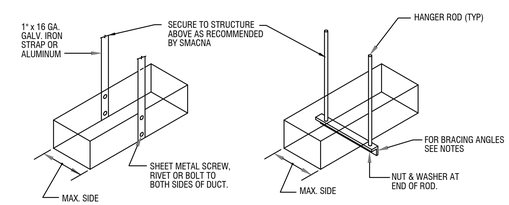

TYPE "A"
(8 FT. MAX. HANGER SPACING. ALSO PROVIDE 3 HANGERS AT EACH TAKE-OFF OR BRANCH.)

TYPE "B", "C", & "D"
(8 FT. MAX. HANGER SPACING)

NOTES:
1. FOR SEVERAL DUCTS ON ONE HANGER, TYPE "B", "C", OR "D" MAY BE USED. SIZE OF HANGER WILL BE SELECTED ON SUM OF DUCT WIDTHS EQUAL TO MAX. WIDTH OF DUCT SCHEDULE.
2. DO NOT ATTACH DUCT HANGERS TO ROOF DECK OR BOTTOM CORD OF JOISTS. PROVIDE ANGLE BRACING AS REQUIRED.
3. CONNECTIONS TO CONCRETE FLOOR SLABS IS PERMITTED. INSTALL PER SPECIFICATION

DUCT DIMENSION	HANGER TYPE	ROD DIA.	ANGLE SIZE	MAX SPACING
UP TO 18"	A	1" STRAP	—	8'-0"
19" TO 60"	B	5/16"	1-1/2" x 1-1/2" x 1/8"	8'-0"
61" TO 96"	C	3/8"	1-1/2" X 1-1/2" x 3/16"	8'-0"
OVER 96"	D	1/2"	2" x 2" x 1/4"	4'-0"

15 M-9 DUCT HANGERS
SCALE: NTS

Client:
16-22 Union Street - Apartment Building
Client: Empire Property Construction
16-22 Union St.
Wilkes-Barre, Pa 18701

Consultants:
DMG
design management group
consulting engineers
570 299 7520
dmgeng.com

CAM architect
CAM architect, LLC
ARCHITECTS | PLANNERS
606 North Main St. Wilkes-Barre, PA 18705
T | 570| 824.3320
F | 570| 606.4966
www.camarchus.com

© 2026 CAM ARCHITECT

Seals:
PRELIMINARY - NOT FOR CONSTRUCTION
THIS DOCUMENT IS EXPERIMENTAL, PRELIMINARY OR PROGRESS ONLY AND IS NOT INTENDED FOR CONSTRUCTION, BIDDING OR NEGOTIATION PURPOSES. DO NOT START CONSTRUCTION WITHOUT A SEALED SET OF CONSTRUCTION DOCUMENTS FROM THE ARCHITECT.

Revisions | Issues
No: Date:

Phase:
PERMIT/PRICING

Project: Apartment Building
Date: 06/15/2026
Drawn: SAS Checked: KJS
Scale: AS NOTED
Sheet:
MECHANICAL DETAILS
M-9

GENERAL ABBREVIATIONS

[E].....	EXISTING
[ETR].....	EXISTING TO REMAIN
[F].....	FUTURE
[N].....	NEW
Δ.....	DELTA
Y.....	WYE
ϕ.....	PHASE
1/C.....	SINGLE CONDUCTOR
3/C.....	THREE CONDUCTOR
A, AMP.....	AMPERE
AC.....	ALTERNATING CURRENT
A/C.....	AIR CONDITIONER
ADA.....	AMERICANS WITH DISABILITIES ACT
ADDTL.....	ADDITIONAL
AF.....	AMP FRAME/AMP FUSE
AFF.....	ABOVE FINISHED FLOOR
AFG.....	ABOVE FINISHED GRADE
AHJ.....	AUTHORITY HAVING JURISDICTION
AHU.....	AIR HANDLING UNIT
AIC.....	INTERRUPTING CAPACITY (AMPERES)
AL.....	ALUMINUM
ANSI.....	AMERICAN NATIONAL STANDARDS INSTITUTE
APPROX.....	APPROXIMATELY
ARCH.....	ARCHITECTURAL
AS.....	AMP SWITCH
ASY.....	ASYMMETRICAL
ATC.....	AUTOMATIC TEMPERATURE CONTROL
ATS.....	AUTOMATIC TRANSFER SWITCH
AUX.....	AUXILIARY
AT.....	AMP TRIP
AWG.....	AMERICAN WIRE GAUGE
BATT.....	BATTERY
BFC.....	BELOW FINISHED CEILING
BFG.....	BELOW FINISHED GRADE
BSMT.....	BASEMENT
BLDG.....	BUILDING
BRKR.....	BREAKER
BMS.....	BALANCED MAGNETIC SWITCH
BR.....	BRANCH
BRF.....	BELOW RAISED FLOOR
C, COND.....	CONDUIT
CB.....	CIRCUIT BREAKER
CCTV.....	CLOSED CIRCUIT TELEVISION
CD.....	CENTIGRADE DEGREE
C.E.....	CONCRETE ENCASED
CKT.....	CIRCUIT
CKTD.....	CIRCUITED
CLG.....	CEILING
COAX.....	COAXIAL
CONC.....	CONCRETE
CONTR.....	CONTRACTOR
CLF.....	CURRENT LIMITING FUSES
CT.....	CURRENT TRANSFORMER
CU.....	COPPER
DB.....	DUCTBANK
DC.....	DIRECT CURRENT
DISC.....	DISCONNECT
DIST.....	DISTRIBUTION
DIV.....	DIVISION
DWG.....	DRAWING
EA.....	EACH
EB.....	ELECTRONIC BALLAST
E.C.....	ELECTRICAL CONTRACTOR
EF.....	EXHAUST FAN
EGC.....	EQUIPMENT GROUNDING CONDUCTOR
EL.....	ELEVATION
ELEC.....	ELECTRIC
EMER.....	EMERGENCY
EMT.....	ELECTRICAL METALLIC TUBING
ENCL.....	ENCLOSURE
EPO.....	EMERGENCY POWER OFF
EPR.....	ETHYLENE PROPYLENE RUBBER
EQUIP.....	EQUIPMENT
EWC.....	ELECTRIC WATER COOLER
EWH.....	ELECTRIC WATER HEATER
EX.....	EXAMPLE
EXIST.....	EXISTING
EXT.....	EXTERNAL/EXTERIOR
F.....	FUSE/FRAME
FA.....	FIRE ALARM
FDR.....	FEEDER
FIN.....	FINISHED
FIXT.....	FIXTURE
FL.....	FLOOR
FLA.....	FULL LOAD AMPS
FLEX.....	FLEXIBLE
FLUOR.....	FLUORESCENT
FMC.....	FLEXIBLE METAL CONDUIT
FS.....	FLOW SWITCH
FT.....	FEET/FOOT
FU.....	FUSE
G.C.....	GENERAL CONTRACTOR
GEC.....	GROUNDING ELECTRODE CONDUCTOR
GEN.....	GENERATOR
GFI.....	GROUND FAULT INTERRUPTER
GND, G.....	GROUND
GRMC.....	GALVANIZED RIGID METAL CONDUIT
GRS.....	GALVANIZED RIGID STEEL
GSR.....	GROUND SENSING RELAY
HGT.....	HEIGHT
HID.....	HIGH INTENSITY DISCHARGE
HOA.....	HAND OFF AUTO
HP.....	HORSEPOWER
HPS.....	HIGH PRESSURE SODIUM
HZ.....	HERTZ
IEEE.....	INSTITUTE OF ELECTRICAL AND ELECTRONICS ENGINEERS
IMC.....	INTERMEDIATE METAL CONDUIT
INCAND.....	INCANDESCENT
INSUL.....	INSULATION
INT.....	INTERIOR/INTERLOCK
JB.....	JUNCTION BOX
KCMIL.....	THOUSAND CIRCULAR MILLS
KW.....	KILOWATT
KWH.....	KILOWATT HOUR
KV.....	KILOVOLT
KVA.....	KILOVOLT AMPERE
LA.....	LIGHTNING ARRESTER
LAB.....	LABORATORY
LF.....	LINEAR FEET
LFMC.....	LIQUIDTIGHT FLEXIBLE METAL CONDUIT
LT.....	LIGHT
LTG.....	LIGHTING
MC/M.C.....	METAL CLAD/MECHANICAL CONTRACTOR
MCB.....	MAIN CIRCUIT BREAKER
MCC.....	MOTOR CONTROL CENTER
MDP.....	MAIN DISTRIBUTION PANEL
MH.....	METAL HALIDE
MIN.....	MINIMUM
MISC.....	MISCELLANEOUS
MLO.....	MAIN LUGS ONLY
MTD.....	MOUNTED
N.....	NEUTRAL
NC.....	NORMALLY CLOSED
NEC.....	NATIONAL ELECTRIC CODE
NEMA.....	NATIONAL ELECTRICAL MANUFACTURERS ASSOCIATION
NESC.....	NATIONAL ELECTRICAL SAFETY CODE
NFPA.....	NATIONAL FIRE PROTECTION ASSOCIATION
NIC.....	NOT IN CONTRACT
NO.....	NORMALLY OPEN
NTS.....	NOT TO SCALE
O.C.....	ON CENTER
P.....	POLE
PA.....	PUBLIC ADDRESS
PB.....	PULL BOX/PUSH BUTTON
P.C.....	PLUMBING CONTRACTOR
PCU.....	POWER CONDITIONING UNIT
PH.....	PHASE
PNL.....	PANEL
PRI.....	PRIMARY
PSI.....	POUNDS PER SQUARE INCH
PT.....	POTENTIAL TRANSFORMER
PVC.....	POLY VINYL CHLORIDE
RECEPT.....	RECEPTACLE
REQD.....	REQUIRED
RGS.....	RIGID GALVANIZED STEEL
RM.....	ROOM
RMC.....	RIGID METALLIC CONDUIT
RNC.....	RIGID NONMETALLIC CONDUIT
SEC.....	SECONDARY
SECT.....	SECTION
SF.....	SQUARE FEET
SN.....	SOLID NEUTRAL
SP.....	SPARE
SPECS.....	SPECIFICATIONS
SUSP.....	SUSPENDED
SW.....	SWITCH
SWBD.....	SWITCHBOARD
SYM.....	SYMMETRICAL
TEL.....	TELEPHONE
THRU.....	THROUGH
TR.....	TRIP
TS.....	TAMPER SWITCH
TYP.....	TYPICAL
U.G., U/G.....	UNDERGROUND
UL.....	UNDERWRITERS LABORATORY
U.O.N.....	UNLESS OTHERWISE NOTED
UPS.....	UNINTERRUPTIBLE POWER SUPPLY
V.....	VOLT/VOLTAGE
VD.....	VOLTAGE DROP
VCR.....	VACUUM CIRCUIT RECLOSER
W.....	WATT
W/.....	WITH
WP.....	WEATHERPROOF
XFMR.....	TRANSFORMER

ADDITION ABBREVIATIONS MAY BE DEFINED IN THE SPECIFICATIONS.

GRAPHIC CONVENTIONS

XX / X	EQUIPMENT TAG, TOP INDICATES EQUIPMENT DESIGNATION, BOTTOM INDICATES EQUIPMENT NUMBER, SEE M/P DRAWINGS FOR FURTHER INFORMATION
XX / XX	PLAN CALLOUT, TOP INDICATES CALLOUT REFERENCE NUMBER, BOTTOM INDICATES SHEET NUMBER
XX / XX	ELEVATION CALLOUT, TOP INDICATES CALLOUT REFERENCE NUMBER, BOTTOM INDICATES SHEET NUMBER
XX / XX	SECTION CALLOUT, TOP INDICATES CALLOUT REFERENCE NUMBER, BOTTOM INDICATES SHEET NUMBER
	REVISION AREA
X	REVISION TAG
X	CONSTRUCTION KEYED NOTE TAG
X	DEMOLITION KEYED NOTE TAG
	POINT OF CONNECTION BETWEEN NEW AND EXISTING
	LIMIT OF DEMOLITION BETWEEN EXISTING TO REMAIN AND TO BE REMOVED

ELECTRICAL GENERAL NOTES

1. THE ENTIRE INSTALLATION SHALL BE IN STRICT ACCORDANCE WITH THE ENFORCED REVISIONS OF THE BUILDING CODE, NFPA 70, NEMA, UL LISTINGS, MANUFACTURERS' RECOMMENDATIONS, THE NATIONAL BOARD OF UNDERWRITERS, STATE CODES, LOCAL CODES, AND ALL AUTHORITIES HAVING JURISDICTION.

2. GENERAL WORK PRACTICES FOR ELECTRICAL CONSTRUCTION SHALL BE IN ACCORDANCE WITH NECA 1, GOOD WORKMANSHIP IN ELECTRICAL CONSTRUCTION, PUBLISHED BY THE NATIONAL ELECTRICAL CONTRACTORS ASSOCIATION. ALL WORK SHALL BE PERFORMED IN A NEAT AND WORKMANLIKE MANNER. RECTILINEAR TO BUILDING STRUCTURE. CARE SHALL BE EXERCISED TO MINIMIZE ANY INCONVENIENCE OR DISTURBANCE TO SPACES OUTSIDE THE AREA OF WORK.

3. ALL MATERIAL AND EQUIPMENT SHALL BE LISTED AND LABELLED FOR THE APPLICATION BY UNDERWRITERS LABORATORIES AND INSTALLED ACCORDING TO ITS LISTING.

4. ALL DEVICES SHOWN ON DRAWINGS ARE DIAGRAMMATIC IN LOCATION AND SHOWN TO INDICATE THE EXTENT, GENERAL CHARACTER, AND GENERAL WIRING REQUIREMENTS ONLY.

5. THE TERM "FURNISH" SHALL MEAN TO OBTAIN AND SUPPLY TO THE JOB SITE. THE TERM "INSTALL" SHALL MEAN TO FIX IN POSITION AND CONNECT FOR USE. THE TERM "PROVIDE" SHALL MEAN TO FURNISH AND INSTALL. THE TERM "WORK" SHALL MEAN ALL LABOR, MATERIAL, EQUIPMENT, SCAFFOLDING, RIGGING, TOOLS, SUPERVISION, SERVICES, SETUP, PROGRAMMING, AND OTHER INCIDENTALS NECESSARY FOR COMPLETE AND OPERABLE INSTALLATION.

6. THE CONTRACTOR SHALL PROVIDE ALL WORK REQUIRED FOR A COMPLETE AND OPERATIONAL INSTALLATION OF THE ELECTRICAL SYSTEMS AS INDICATED OR IMPLIED BY THE DESIGN DOCUMENTS.

7. THE CONTRACTOR SHALL REVIEW ALL CONTRACT DOCUMENTS (DRAWINGS, SPECIFICATIONS, EQUIPMENT CUT SHEETS, ETC.) FOR ALL TRADES AND PROVIDE ALL ELECTRICAL WORK REQUIRED FOR COMPLETE AND OPERABLE INSTALLATION.

8. THE CONTRACTOR SHALL COORDINATE ALL WORK, ELECTRICAL REQUIREMENTS, AND THE ACTUAL LOCATIONS OF ALL EQUIPMENT, CASEWORK, DEVICES, FIXTURES, SWITCHES, SENSORS, ETC., WITH ALL DRAWINGS, SPECIFICATIONS, AND WITH ALL TRADES IN THE FIELD PRIOR TO PROVIDING PRICING AND PERFORMING ANY ROUGH-IN WORK.

9. THE CONTRACTOR IS HEREBY CAUTIONED THAT THE ELECTRICAL POWER CHARACTERISTICS (VOLTAGE, PHASE, HORSEPOWER, AMPERAGE, ETC.) OF EQUIPMENT ARE BASED ON INFORMATION AVAILABLE AT THE TIME OF PROJECT DESIGN. CONTRACTOR SHALL VERIFY ACTUAL CHARACTERISTICS FOR EACH PIECE OF EQUIPMENT TO BE INSTALLED PRIOR TO ORDERING EQUIPMENT OR PERFORMING ANY ROUGH-IN WORK.

10. DEVICES INDICATED TO BE INSTALLED IN THE SAME LOCATIONS WITH DIFFERENT ELEVATIONS SHALL BE ALIGNED VERTICALLY AND HORIZONTALLY. FOR ALL MOUNTING HEIGHTS AND LOCATIONS (SWITCHES, OUTLETS, FIRE ALARM AUDIBLE AND VISUAL DEVICES, FIRE ALARM PULL STATIONS, SECURITY DEVICES, CARD READERS, SENSORS, ETC.), REFER TO THE ARCHITECTURAL DRAWINGS AND COORDINATE ALL LOCATIONS BETWEEN TRADES.

11. ADJUSTMENTS TO WIRING DEVICES TO AVOID STRUCTURAL OR OTHER INTERFERENCES AS WELL AS WORK INDICATED WITH MINOR DETAILS OMITTED SHALL BE PROVIDED WITHOUT EXTRA COST.

12. ANY CHANGES AND/OR MODIFICATIONS MUST BE REVIEWED AND APPROVED BY THE ENGINEER AND/OR OWNER'S REPRESENTATIVE PRIOR TO CONSTRUCTION.

13. REMOVE ALL TRASH, DEBRIS, AND DEMOLITION MATERIAL FROM THE PREMISES AT THE END OF EACH WORK DAY. JOB SITE SHALL BE KEPT IN "BROOM CLEAN" CONDITION.

14. ELECTRICAL PANELS AND DISCONNECTS SHALL BE LABELED WITH ENGRAVED PLASTIC TAGS MOUNTED ON THE OUTSIDE OF THE EQUIPMENT AND BEARING THE VOLTAGE AND DESIGNATION OF THE EQUIPMENT.

15. PROVIDE ALL PANELBOARD SCHEDULES IN AN EDITABLE ELECTRONIC FORMAT (MS WORD OR EXCEL). LIGHTING CIRCUIT BREAKER LABELS SHALL BE SPECIFIC TO THE AREA. USE BUILDING COLUMNS, ROOM NAMES, ETC. FOR A MORE ACCURATE LOCATION.

16. ALL RECEPTACLES AND BRANCH CIRCUITS WITHIN 6 FEET OF SINKS, 20 FEET OF WATER TANKS, IN KITCHENS, IN GARAGES, SERVING ELECTRIC WATER FOUNTAINS, AND ALL OTHER LOCATIONS REQUIRED BY THE NEC SHALL BE PROVIDED WITH GROUND FAULT PROTECTION.

17. ALL EQUIPMENT SHALL BE NEMA RATED AND LISTED FOR THE APPLICATION AND ENVIRONMENT.

18. IN THE EVENT THAT LOCAL EQUIPMENT DISCONNECTS CANNOT BE LOCATED SUCH THAT WORKING CLEARANCES ARE MAINTAINED, THE NEXT UPSTREAM OVERCURRENT DEVICE SHALL BE INDIVIDUALLY CAPABLE OF BEING LOCKED IN THE OPEN POSITION IN ACCORDANCE WITH 440.14 AND 430.102.

19. ALL FIRE/SMOKE RATINGS SHALL BE MAINTAINED. APPLY FIRESTOPPING AND SEALANT AS REQUIRED.

20. FLASH ALL ROOF PENETRATIONS IN ACCORDANCE WITH THE ROOFING SYSTEM MANUFACTURER AND THE CONTRACT DOCUMENTS.

21. PROVIDE ALL WORK REQUIRED FOR A COMPLETE AND OPERABLE INSTALLATION OF THE FIRE ALARM, SECURITY, AND ANY OTHER SPECIAL SYSTEMS. COORDINATE EXACT REQUIREMENTS WITH OWNER'S VENDORS.

22. WHERE NO CIRCUIT IS DESIGNATED FOR A DEVICE (INCLUDING EQUIPMENT NOT SHOWN ON DRAWINGS), THE E.C. SHALL CIRCUIT TO THE NEAREST AVAILABLE PANEL WITH CONDUCTOR, RACEWAY, AND BREAKER SIZED PER THE LATEST ADOPTED REVISION OF THE NEC.

23. ALL WIRE AND CONDUIT SHALL BE CONCEALED IN WALLS, CEILING PLENUMS, BULKHEADS AND IN ROOF STRUCTURAL AREAS, U.O.N. THE E.C. SHALL COORDINATE FULLY WITH ALL OTHER TRADES TO INSTALL ALL CONDUIT AND WIRING IN THESE ASSOCIATED STRUCTURES. ANY OTHER MEANS OF PATHWAY SUGGESTED MUST FIRST BE APPROVED FROM THE ELECTRICAL ENGINEER BEFORE INSTALLATION CAN PROCEED.

24. PRIOR TO SUBMITTING A BID, THE CONTRACTOR SHALL VISIT THE SITE AND FAMILIARIZE HIMSELF WITH ALL EXISTING CONDITIONS PERTAINING TO THIS WORK. THE CONTRACTOR SHALL INVESTIGATE ALL RELOCATIONS AND NEW WORK AND MAKE ALLOWANCES IN HIS BID FOR ALL CHANGES TO THE ELECTRICAL SYSTEM WHICH ARE NECESSARY. FAILURE TO COMPLY WITH THIS SHALL NOT CONSTITUTE A REASON FOR PAYMENT OF EXTRA MONIES DURING THE CONSTRUCTION PHASE.

25. MAKE ALL NECESSARY ARRANGEMENTS WITH THE OWNER FOR THE INSTALLATION OF TEMPORARY LIGHTING AND POWER SERVICES TAILORED FOR THIS PROJECT. SET TEMPORARY METERS IN ACCORDANCE WITH THE UTILITY PROVIDERS REQUIREMENTS. INSTALL AND MAINTAIN ALL TEMPORARY LIGHT AND POWER WIRING, INCLUDING, BUT NOT LIMITED TO CONDUITS, WIRE, SWITCHES, FUSE BOXES, RECEPTACLES, DISTRIBUTION PANELBOARDS, FUSED DISCONNECT SWITCHES, GROUND FAULT INTERRUPTION EQUIPMENT, FIXTURES, LAMPS, FUSES AND ANY OTHER MATERIAL AND/OR EQUIPMENT REQUIRED TO PROVIDE SUFFICIENT ILLUMINATION AND POWER, AS REQUIRED BY THE STATE LABOR BOARD, O.S.H.A., OR ALL OTHER AUTHORITIES HAVING JURISDICTION FOR ALL AREAS OF THE SITE WHERE WORK WILL BE PERFORMED BY ANY CONTRACTOR. PROVIDE TEMPORARY POWER CIRCUITS, OUTLETS, ETC. IN ACCORDANCE WITH THE POWER REQUIREMENTS OF THE VARIOUS VOLTAGE/AMPERAGE/HORSEPOWER RATINGS OF THE EQUIPMENT AND TOOLS TO BE USED BY THE CONTRACTORS IN CONSTRUCTION WORK. ONCE THE PERMANENT LIGHTING AND POWER SYSTEMS ARE INSTALLED AND OPERATIONAL, MAKE THE CUT-OVER. REMOVE ALL TEMPORARY ELECTRICAL DISTRIBUTION COMPONENTS AND SYSTEM AFTER CUT-OVER.

LIGHTING

A a / LP1-X	LUMINAIRE WITH OUTLET BOX. EMERGENCY SUPPLY/NIGHT LIGHTING CIRCUIT. *A* INDICATES FIXTURE TYPE. (SEE FIXTURE SCHEDULE. TYP.) *LP1-X* INDICATES CIRCUIT NUMBER. (TYP.) SWITCH CONTROL. (TYP.) — SHADING INDICATES "a" INDICATES
	CEILING-MOUNTED LUMINAIRE
	WALL-MOUNTED LUMINAIRE
	POLE, BASE, ARM, AND SITE LIGHTING LUMINAIRE
	CEILING OR WALL-MOUNTED EXIT SIGN (SHADED QUADRANT INDICATES FACE) WITH CHEVRONS AND EMERGENCY HEADS AS INDICATED ON FLOOR PLANS
4A	BATTERY OPERATED EMERGENCY LIGHTING UNIT WITH DUAL HEADS
	DUAL REMOTE HEAD FOR BATTERY OPERATED EMERGENCY LIGHTING UNIT

SWITCHES

S	WALL OUTLET BOX AND SINGLE POLE SWITCH (20 AMP)
S^{3}	WALL OUTLET BOX AND THREE-WAY SWITCH (20 AMP)
S^{4}	WALL OUTLET BOX AND FOUR-WAY SWITCH (20 AMP)
S^{WP}	WALL OUTLET BOX AND SINGLE-POLE SWITCH (20 AMP, NON-LOCK, WITH WEATHERPROOF COVER)
S^{K}	WALL OUTLET BOX SINGLE POLE KEY SWITCH (20 AMP)
S^{K3}	WALL OUTLET BOX AND THREE-WAY KEY SWITCH (20 AMP)
S^{K4}	WALL OUTLET BOX AND FOUR-WAY KEY SWITCH (20 AMP)
S^{D}	WALL OUTLET BOX AND DIMMER SWITCH
S^{LV}	LOW VOLTAGE LIGHTING SWITCH
S^{T}	TIME SWITCH
OS	WALL-MOUNTED OCCUPANCY SENSOR
OS	CEILING-MOUNTED OCCUPANCY SENSOR
D	AUTOMATIC DAYLIGHTING CONTROL SENSOR
RC	ROOM CONTROLLER

SWITCHING NOTES:

1. MOUNT SWITCHES AT 42" U.O.N.
2. SWITCHES SHALL BE RATED FOR LOAD CONTROLLED.
3. DIMMERS SHALL BE COMPATIBLE FOR LIGHTING FIXTURE LAMP SOURCE AND BALLAST/DRIVER BEING CONTROLLED.
4. WHERE MULTIPLE SWITCHES ARE SHOWN, PROVIDE GANG SWITCH IN SINGLE ENCLOSURE WITH SINGLE FACEPLATE.
5. LOWERCASE LETTER DENOTES SWITCH CONTROL.

WIRING DEVICES

	WALL OUTLET BOX AND 20 AMP DUPLEX RECEPTACLE
	WALL OUTLET BOX AND 20 AMP DUPLEX RECEPTACLE, MOUNTED 6" ABOVE COUNTER BACKSPLASH
	TWO GANG WALL OUTLET BOX AND TWO 20 AMP DUPLEX RECEPTACLES
	TWO GANG WALL OUTLET BOX AND TWO 20 AMP DUPLEX RECEPTACLES, MOUNTED 6" ABOVE COUNTER BACKSPLASH
	WALL OUTLET BOX AND 20 AMP SINGLE RECEPTACLE
	WALL OUTLET BOX AND SPECIAL PURPOSE RECEPTACLE
TD	FLUSH FLOOR BOX WITH FIRE/SMOKE RATED PENETRATION, COVER, AND 20 AMP RECEPTACLE(S)/DATA OUTLET(S) CONFIGURATION AS INDICATED. PROVIDE MINIMUM 3/4" CONDUIT(2) TO NEAREST WALL AND UP TO ACCESSIBLE FINISHED CEILING U.O.N.
	CEILING OUTLET BOX AND 20 AMP RECEPTACLE CONFIGURATION AS INDICATED
	PLUGMOLD WITH DIVIDER. PROVIDE RECEPTACLES AND TELE/DATA OUTLETS AS INDICATED.
J	FLUSH WALL JUNCTION BOX OR JUNCTION BOX ABOVE CEILING.

WIRING DEVICES NOTATIONS

+XX	DIMENSIONED HEIGHT A.F.F.
"a"	LOWERCASE LETTER DENOTES SWITCH CONTROL.
"EX"	EXISTING DEVICE
"GFI"	GROUND FAULT CIRCUIT INTERRUPTER PERSONAL PROTECTION
"GFP"	GROUND FAULT PROTECTION OF EQUIPMENT
"IG"	ISOLATED GROUND (RECEPTACLES INCLUDE SEPARATE GREEN GROUND CONDUCTOR TO ISOLATED GROUND BUS IN PANEL)
"WP"	WEATHERPROOF

EQUIPMENT

	208/120V PANELBOARD
	480/277V BRANCH CIRCUIT PANELBOARD
	UNFUSED DISCONNECT SWITCH
	FUSED DISCONNECT SWITCH
	COMBINATION DISCONNECT SWITCH AND MAGNETIC MOTOR CONTROLLER
	MAGNETIC MOTOR STARTER OR CONTACTOR
	MOTOR CONNECTION
S^{M}	MANUAL MOTOR STARTER SWITCH WITH THERMAL OVERLOADS
T	TRANSFORMER
M	MOTORIZED DAMPER LOCATION (FURNISHED UNDER DIVISION 23)
TC	TIME CLOCK
EPO	EMERGENCY POWER OFF SWITCH
R	ENCAPSULATED RELAY/SHUTDOWN RELAY
SPD	SURGE PROTECTION DEVICE
VFD	VARIABLE FREQUENCY DRIVE

FIRE ALARM

F	WALL-MOUNTED FLUSH MANUAL PULL STATION
AV	WALL-MOUNTED AUDIO AND VISUAL ALARM WITH CANDELA RATING AS NOTED
V	WALL-MOUNTED VISUAL ALARM WITH CANDELA RATING AS NOTED
S	CEILING-MOUNTED SMOKE DETECTOR, "CO" DENOTES COMBINATION CARBON MONOXIDE/SMOKE DETECTOR
H	CEILING-MOUNTED HEAT DETECTOR, "CO" DENOTES COMBINATION CARBON MONOXIDE/SMOKE DETECTOR
D	DUCT-MOUNTED SMOKE DETECTOR, "CO" DENOTES COMBINATION CARBON MONOXIDE/SMOKE DETECTOR
FS	SPRINKLER SYSTEM FLOW SWITCH CONNECTION
PS	SPRINKLER SYSTEM PRESSURE SWITCH CONNECTION
TS	SPRINKLER SYSTEM TAMPER SWITCH CONNECTION
IM	FIRE ADDRESSABLE INTERFACE MODULE
	REMOTE TEST STATION WITH LED INDICATOR AND KEY SWITCH
CZ	FIRE ALARM SYSTEM CONTROL MODULE
MZ	FIRE ALARM SYSTEM MONITOR MODULE
FACP	FIRE ALARM SYSTEM CONTROL PANEL
FAAP	FIRE ALARM SYSTEM ANNUNCIATOR PANEL

TELECOMMUNICATIONS

	COMBINATION TELE/DATA WALL OUTLET BOX WITH MINIMUM 1" CONDUIT TO ABOVE ACCESSIBLE FINISHED CEILING (PROVIDE PULL CORD AND END BUSHING) MOUNTED AT 18" A.F.F. U.O.N. SEE DRAWINGS FOR CABLE TYPE, QTY. ETC.
	FLUSH FLOOR BOX FOR ONE TELEPHONE AND ONE DATA JACK WITH COVER. PROVIDE MINIMUM 1" CONDUIT TO NEAREST WALL AND UP TO ABOVE ACCESSIBLE CEILING (PROVIDE PULL CORD AND END BUSHING) U.O.N. SEE DRAWINGS FOR CABLE TYPE, QTY. ETC.
TV	FLUSH-MOUNTED TELEVISION CABLE LOCATION WITH RECESSED FLAT PANEL MOUNTING ENCLOSURE EQUIPPED WITH RECEPTACLE, DATA DROP, AND CABLE TV COAX CONNECTION (COORDINATE LOCATION AND MOUNTING HEIGHT WITH ARCHITECT.) SEE DRAWINGS FOR CABLE TYPE, QTY. ETC.

RACEWAYS

	HOMERUN TO PANEL
	CONDUIT TURNING UP
	CONDUIT TURNING DOWN
	CONDUIT WITH CAP
12	LADDER TYPE CABLE TRAY (NUMBER INDICATES WIDTH)
OH	OVERHEAD CONDUCTORS
	UNDERGROUND DUCTBANK SYSTEM
X / X	DUCTBANK SYSTEM SECTION CALLOUT, "X-X" INDICATES CORRESPONDING SECTION

SYMBOLS LEGEND NOTE

NOT ALL SYMBOLS AND ABBREVIATIONS INDICATED ARE APPLICABLE TO THIS PROJECT. INDIVIDUAL DRAWINGS MAY DEFINE UNIQUE SYMBOLS FOR CONVENIENCE.

Client:

16-22 Union Street - Apartment Building

Client: Empire Property Construction
16-22 Union St.
Wilkes-Barre, Pa 18701

Consultants:

DMG
design management group
consulting engineers
570 299 7520
dmgeng.com

CAM architect

CAM architect, LLC
ARCHITECTS | PLANNERS
606 North Main St. Wilkes-Barre, PA 18705
T | (570) 824.3320
F | (570) 608.4966
www.camarchus.com

© 2026 CAM ARCHITECT

Seals:

PRELIMINARY - NOT FOR CONSTRUCTION
THIS DOCUMENT IS FOR INFORMATIONAL PURPOSES ONLY AND IS NOT INTENDED FOR CONSTRUCTION OR RECORD. DO NOT SCALE FROM DRAWINGS. SEALED SET OF CONSTRUCTION DOCUMENTS MAY BE OBTAINED FROM THE ARCHITECT.

Revisions | Issues

No:	Date:

Phase:
PERMIT/PRICING

Project: Apartment Building
Date: 06/15/2026
Drawn: DP Checked: KJS
Scale: AS NOTED
Sheet:

ELECTRICAL COVER DRAWING

E-1

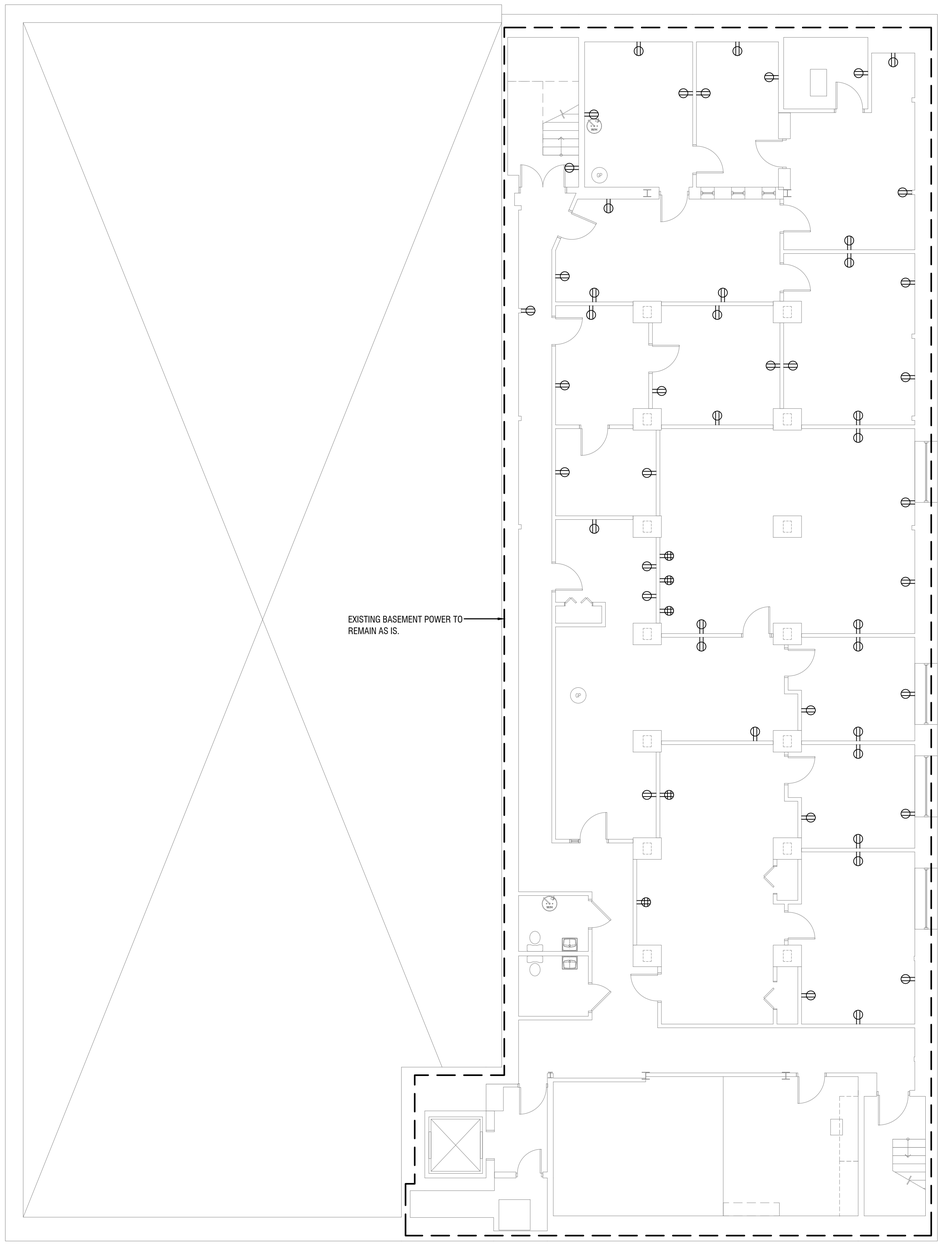

1 ED-1 EXISTING BASEMENT FLOOR PLAN
SCALE: 1/8" = 1'-0"

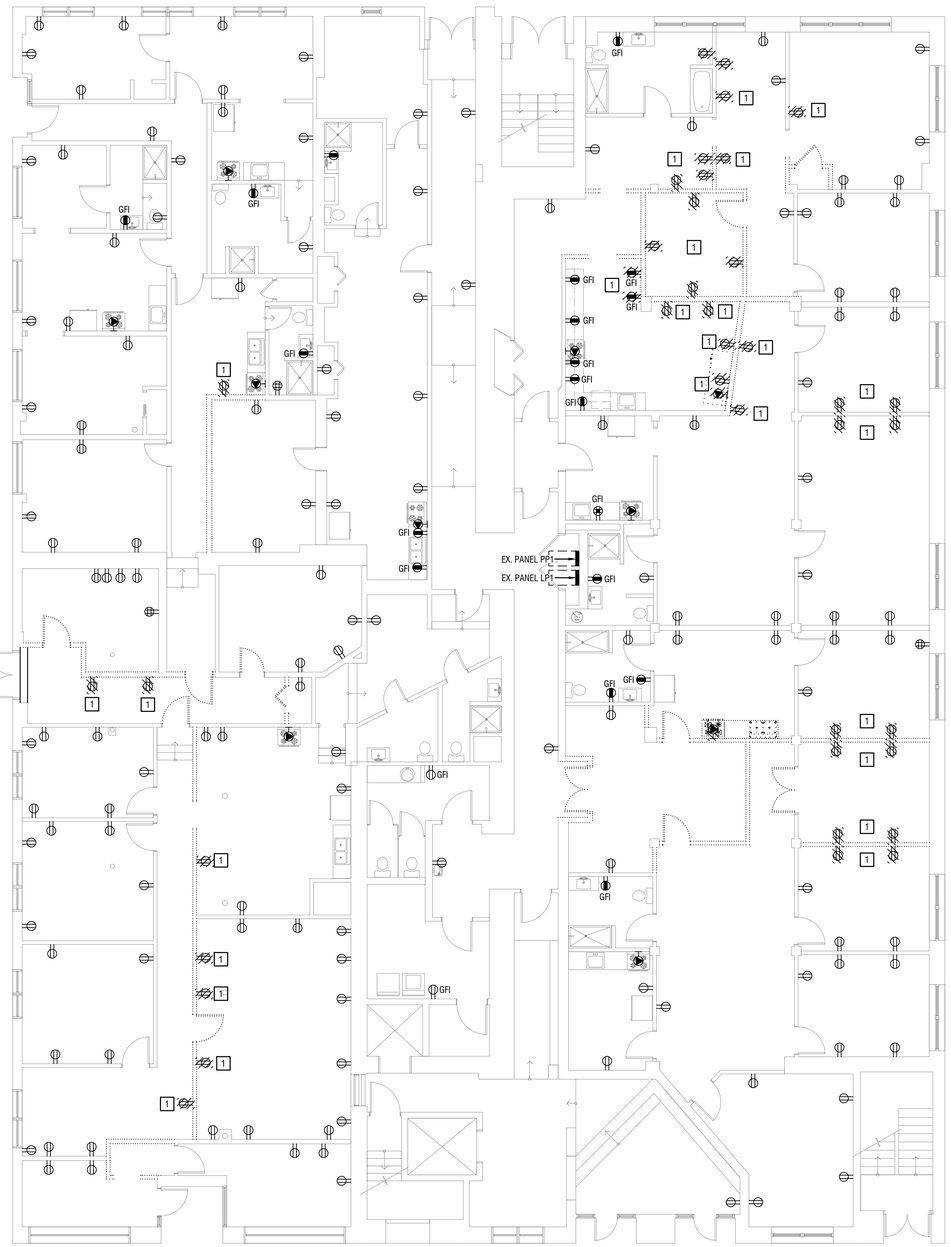

2 ED-1 EXISTING FIRST FLOOR PLAN
SCALE: 1/8" = 1'-0"

KEYED POWER DEMOLITION NOTES:

1 EXISTING RECEPTACLE TO BE DEMOLISHED FOR NEW FLOOR PLAN OF WALL REMOVAL. COORDINATE WITH ARCHITECTURAL DRAWINGS.

Client:
16-22 Union Street - Apartment Building
Client: Empire Property Construction
16-22 Union St.
Wilkes-Barre, Pa 18701

Consultants:
DMG design management group
consulting engineers
570.970.9000
dmgeng.com

CAM architect
CAM architect, LLC
ARCHITECTS | PLANNERS
606 North Main St, Wilkes-Barre, PA 18705
T | (570) 824-3320
F | (570) 606-9666
www.camarchus.com
© 2024 CAM ARCHITECT

Seals:
PRELIMINARY - NOT FOR CONSTRUCTION
THIS COMPUTER ENGINEERING & FORMATION IS FOR PRELIMINARY PURPOSES ONLY AND IS NOT INTENDED FOR CONSTRUCTION OR PERMITS. DO AND IS NOT INTENDED FOR CONSTRUCTION SEALED SET OF CONSTRUCTION DOCUMENTS FROM THE ARCHITECT.

Revisions | Issues
No: Date:

Phase:
PERMIT/PRICING

Project: Apartment Building
Date: 06/15/2026
Drawn: DP Checked: KJS
Scale: AS NOTED
Sheet:

EXISTING BASEMENT & FIRST FLOOR POWER PLAN
ED-1

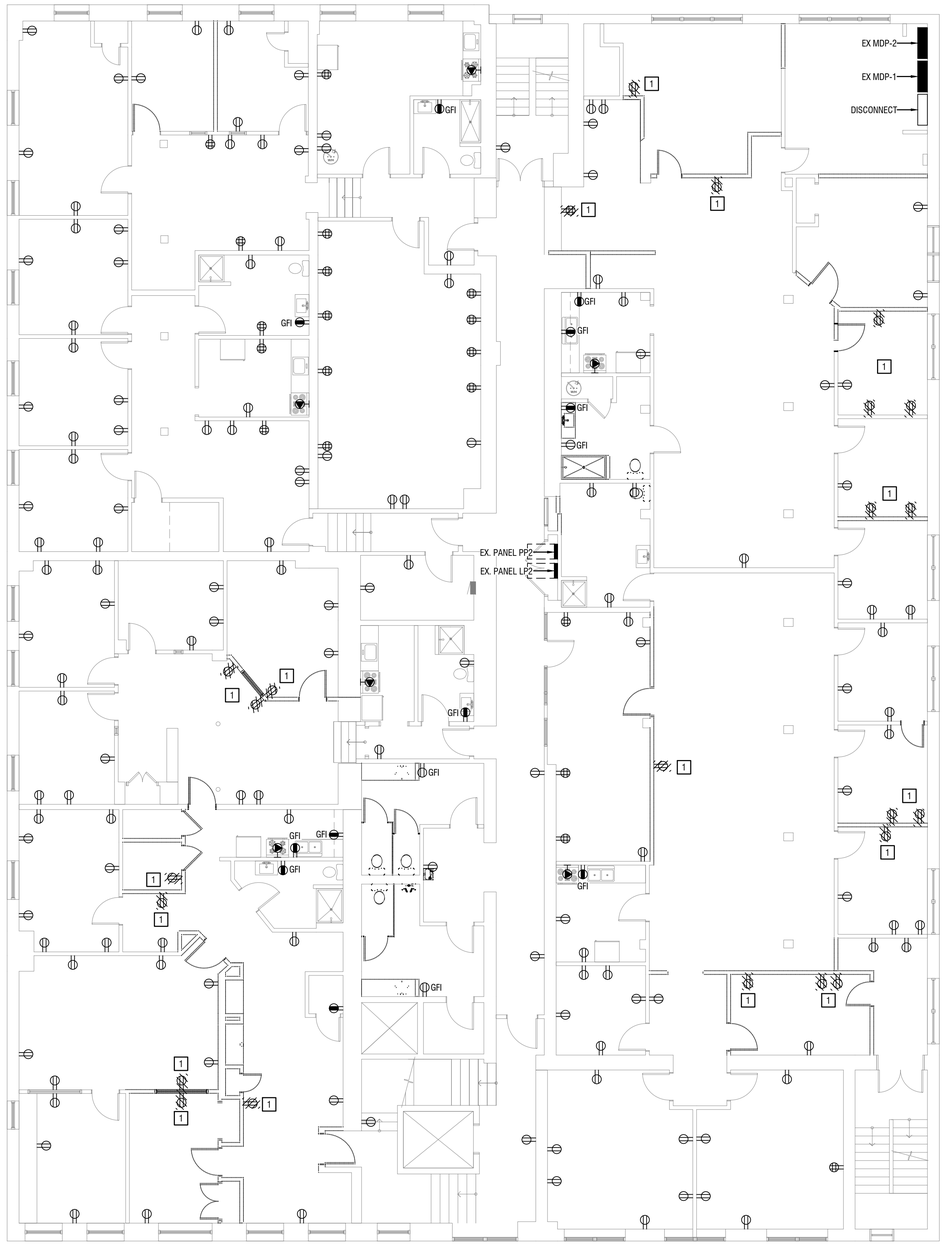

1 ED-2 EXISTING SECOND FLOOR PLAN
SCALE: 1/8" = 1'-0"

KEYED POWER DEMOLITION NOTES:

1 EXISTING RECEPTACLE TO BE DEMOLISHED FOR NEW FLOOR PLAN OF WALL REMOVAL. COORDINATE WITH ARCHITECTURAL DRAWINGS.

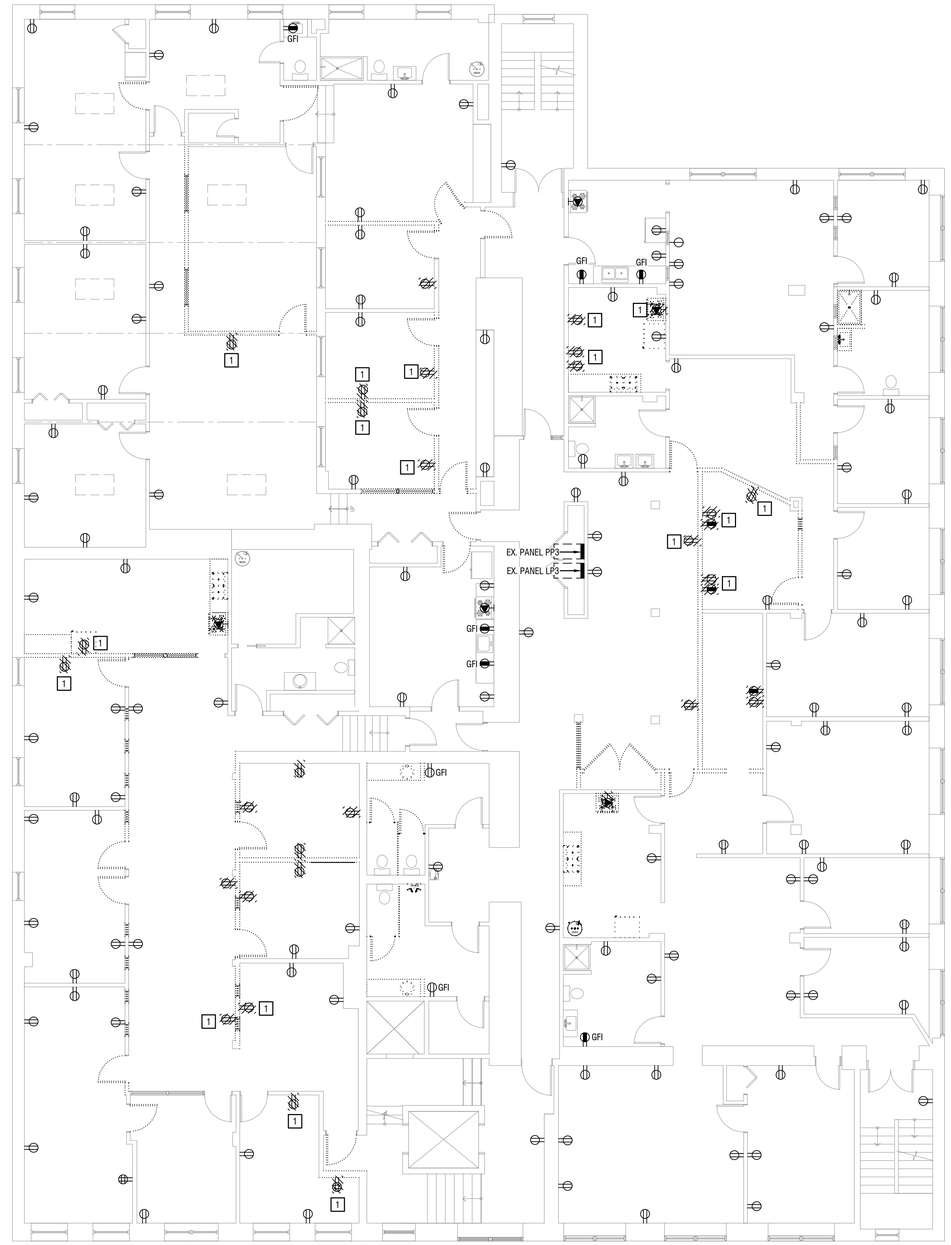

1 ED-2 EXISTING THIRD FLOOR PLAN
SCALE: 1/8" = 1'-0"

KEYED POWER DEMOLITION NOTES:

1 EXISTING RECEPTACLE TO BE DEMOLISHED FOR NEW FLOOR PLAN OF WALL REMOVAL. COORDINATE WITH ARCHITECTURAL DRAWINGS.

Client:
16-22 Union Street - Apartment Building
Client: Empire Property Construction
16-22 Union St.
Wilkes-Barre, Pa 18701

Consultants:
DMG
design management group
consulting engineers
p | 570.829.7200
dmgeng.com

CAM architect
CAM architect, LLC
ARCHITECTS | PLANNERS
406 North Main St. Wilkes-Barre, PA 18705
T | 570| 824-3320
F | 570| 606-9966
www.camarchus.com

© 2026 CAM ARCHITECT

Seals:
PRELIMINARY - NOT FOR CONSTRUCTION
PLANS COMPLETED ARE PRELIMINARY & FOR INFORMATIONAL PURPOSES ONLY AND SHALL NOT BE ACCEPTED FOR CONSTRUCTION OR PERMITS. DO NOT SEAL NOT INTENDED FOR CONSTRUCTION. SEALED SET OF CONSTRUCTION DOCUMENTS FROM THE ARCHITECT OF CONSTRUCTION DOCUMENTS FROM THE ARCHITECT

Revisions | Issues
No: Date:

Phase:
PERMIT/PRICING

Project: Apartment Building
Date: 06/15/2026
Drawn: DP Checked: KJS
Scale: AS NOTED
Sheet:

EXISTING SECOND & THIRD FLOOR POWER PLAN
ED-2

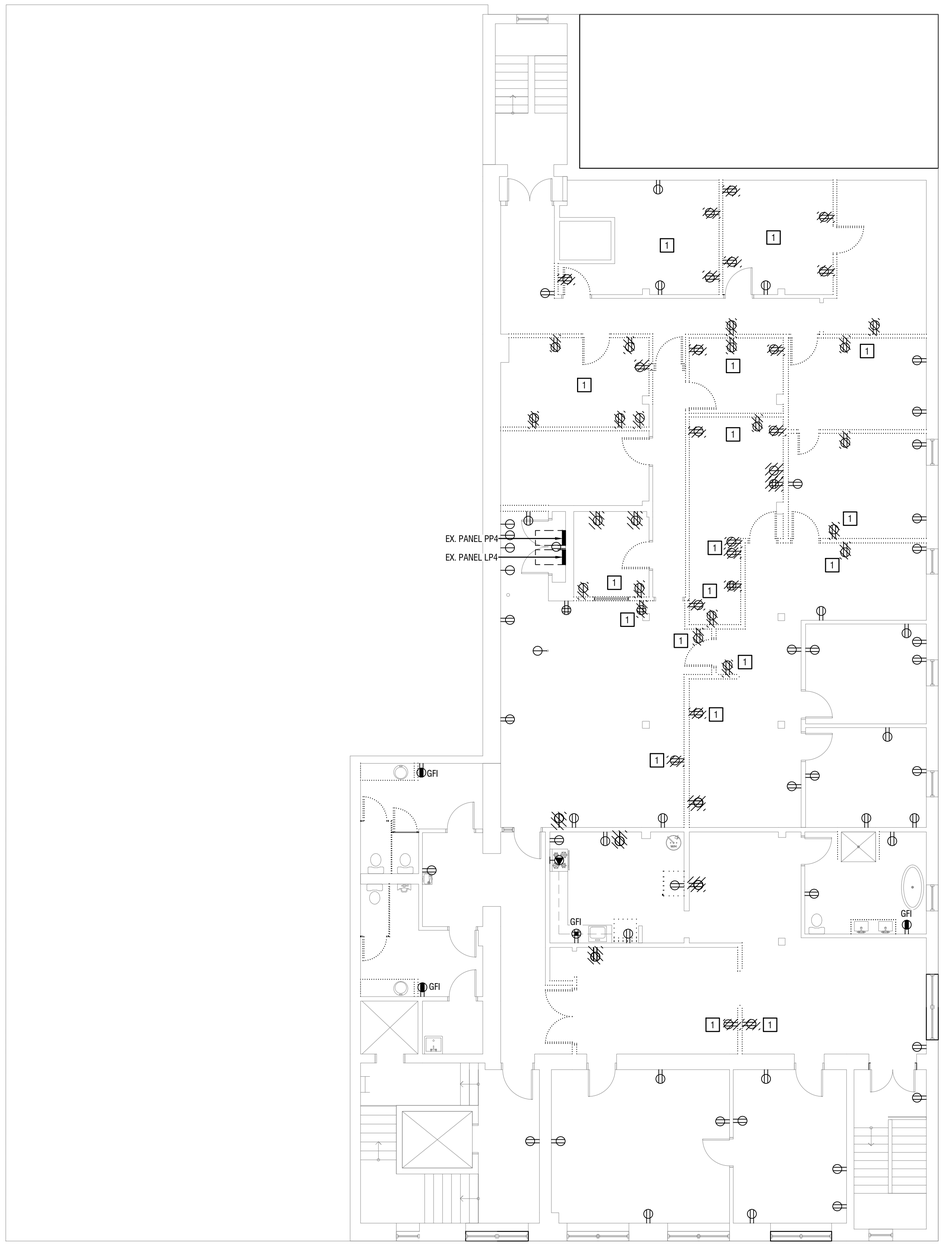

1 / ED-3 EXISTING FOURTH FLOOR PLAN
SCALE: 1/8" = 1'-0"

KEYED POWER DEMOLITION NOTES:

1. EXISTING RECEPTACLE TO BE DEMOLISHED FOR NEW FLOOR PLAN OF WALL REMOVAL. COORDINATE WITH ARCHITECTURAL DRAWINGS.

1 / ED-3 EXISTING ROOF FLOOR PLAN
SCALE: 1/8" = 1'-0"

KEYED POWER DEMOLITION NOTES:

1. DISCONNECT EXISTING MECHANICAL EQUIPMENT. REMOVE FEEDERS AND SPARE BREAKER.

Client:

16-22 Union Street - Apartment Building

Client: Empire Property Construction
16-22 Union St.
Wilkes-Barre, Pa 18701

Consultants:

DMG
design management group
consulting engineers
570 299 7520
dmgeng.com

CAM architect, LLC
ARCHITECTS | PLANNERS
606 North Main St. Wilkes-Barre, PA 18705
T | 570| 824-3320
F | 570| 606-4966
www.camarchus.com

CAM architect

© 2026 CAM ARCHITECT

Seals:

PRELIMINARY - NOT FOR CONSTRUCTION
THIS DOCUMENT, ALTHOUGH IN PROGRESS, IS FORWARDED FOR INFORMATION OR REVIEW PURPOSES ONLY AND IS NOT INTENDED FOR CONSTRUCTION, BIDDING OR PERMIT. DO NOT START CONSTRUCTION WITHOUT A SEALED SET OF CONSTRUCTION DOCUMENTS FROM THE ARCHITECT.

Revisions | Issues

No:	Date:

Phase:
PERMIT/PRICING

Project: Apartment Building
Date: 06/15/2026
Drawn: DP Checked: KJS
Scale: AS NOTED
Sheet:

EXISTING FOURTH & ROOF POWER PLANS

ED-3

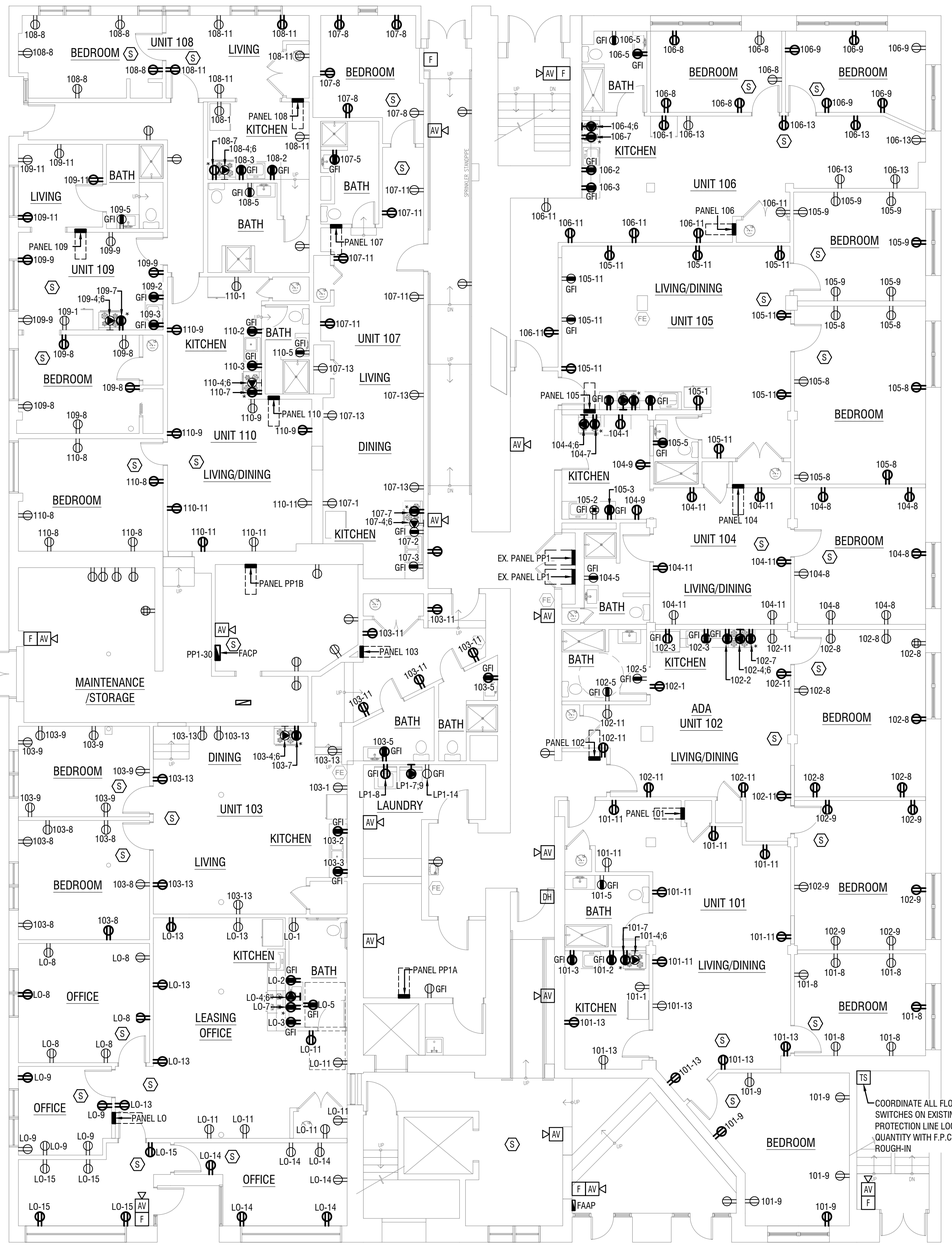

1 E-2 FIRST FLOOR POWER PLAN

SCALE: 1/8" = 1'-0"

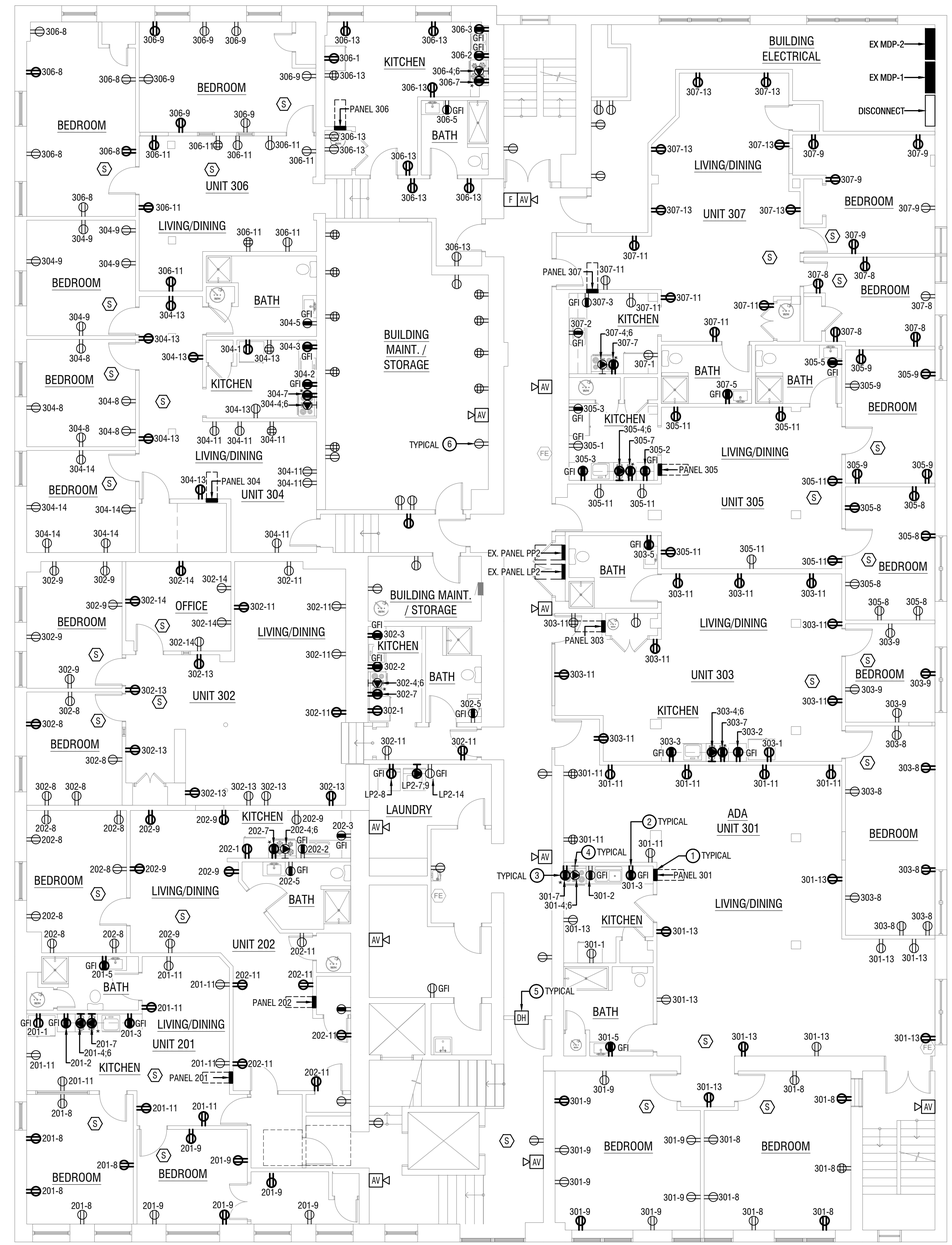

2 E-2 SECOND FLOOR POWER PLAN

SCALE: 1/8" = 1'-0"

GENERAL PLAN NOTES

1. ALL DEVICES SHOWN ON ELECTRICAL DRAWINGS ARE DIAGRAMMATIC IN LOCATION AND SHOWN FOR GENERAL WIRING PURPOSES ONLY. THE E.C. SHALL COORDINATE THE ACTUAL LOCATIONS, MOUNTING HEIGHTS, AND FINAL WIRING REQUIREMENTS FOR ALL EQUIPMENT, CASEWORK, DEVICES, FIXTURES, SWITCHES, SENSORS, ETC. WITH THE OWNER AND ARCHITECT PRIOR TO PERFORMING ANY ROUGH-IN WORK. MOUNT DEVICES IN A COMMON VERTICAL PLANE. PROVIDE MULTI-GANG FACE PLATES WHEREVER POSSIBLE.
2. THE E.C. SHALL COORDINATE ALL ELECTRICAL REQUIREMENTS BETWEEN TRADES TO ASSURE THE PROPER INSTALLATION OF ALL EQUIPMENT.
3. ALL RECEPTACLES SHALL BE TAMPER RESISTANT PER NEC ARTICLE 406.11.
4. ALL COUNTERTOP RECEPTACLES FOR KITCHENS, KITCHENETTES, AND RESTROOMS SHALL BE GFCI-PROTECTED.
5. ALL 120V-1Ø CIRCUITS SHALL BE AFCI-PROTECTED PER NEC ARTICLE 210.12.
6. ALL RECEPTACLES WITHIN DWELLING UNIT SHALL BE SPACED PER NEC REGULATIONS SECTION 210.60 & 210.52(A) & (D). DISTANCE BETWEEN INTERIOR RECEPTACLES SHALL NOT EXCEED 12'-0", AND A RECEPTACLE MUST BE WITHIN 6'-0" OF DOORWAYS.
7. VERIFY THE FINAL LOCATION FOR THE FIRE ALARM ANNUNCIATOR PANEL WITH THE FIRE MARSHAL.

KEYED POWER CONSTRUCTION NOTES

1. COORDINATE FINAL PANEL LOCATION AND WALL CONSTRUCTION WITH OWNER PRIOR TO ROUGH-IN.
2. ABOVE COUNTER GFI SMALL APPLIANCE CIRCUIT RECEPTACLE. COORDINATE FINAL MOUNTING HEIGHT WITH OWNER AND BACKSPLASH PRIOR TO ROUGH-IN.
3. RECEPTACLE FOR MICROWAVE ABOVE RANGE. COORDINATE FINAL MOUNTING HEIGHT WITH CABINETRY AND APPLIANCE CUT SHEET.
4. ELECTRIC RANGE RECEPTACLE. COORDINATE FINAL MOUNTING LOCATION, HEIGHT, PLUG TYPE AND ELECTRICAL CHARACTERISTICS WITH CUT SHEET PRIOR TO ROUGH-IN.
5. COORDINATE ALL FIRE DOOR LOCATIONS AND FIRE ALARM DEVICES WITH ARCHITECTURAL DRAWINGS.
6. EXISTING RECEPTACLES. COORDINATE WITH OWNER RECEPTACLES TO REMAIN OR BE BLANKED OFF. UPDATE PANELBOARD SCHEDULE WITH APPROPRIATE LOCATION OF RECEPTACLES TO REMAIN.

FIRE ALARM SYSTEM CONTACT:
EASTERN TIME INC.
JUSTIN EDDY
(570) 840-1473
JustinE@EASTERN-TIME.COM

FIRE WALL NOTE:
SEE ARCHITECTURAL DRAWING A0.5 FOR ALL FIRE WALL LOCATIONS AND RATINGS. COORDINATE FIRE SEALING ALL PENETRATIONS THROUGH WALLS.

Client:
16-22 Union Street - Apartment Building
Client: Empire Property Construction
16-22 Union St.
Wilkes-Barre, Pa 18701

Consultants:
DMG
design management group
consulting engineers
570 299 7520
dmgeng.com

CAM architect
CAM architect, LLC
ARCHITECTS | PLANNERS
606 North Main St. Wilkes-Barre, PA 18705
T | 570| 824.3320
F | 570| 606.4966
www.camarchus.com
© 2026 CAM ARCHITECT

Seals:
PRELIMINARY - NOT FOR CONSTRUCTION
THE DOCUMENTS ARE PROVIDED, IN FOR INFORMATION PURPOSES ONLY, AND NOT INTENDED FOR CONSTRUCTION OR BIDDING. DO NOT START CONSTRUCTION WITHOUT A SEALED SET OF CONSTRUCTION DOCUMENTS FROM THE ARCHITECT.

Revisions | Issues
No: Date:

Phase:
PERMIT/PRICING

Project: Apartment Building
Date: 06/15/2026
Drawn: DP Checked: KJS
Scale: AS NOTED
Sheet:

FIRST & SECOND FLOOR NEW POWER PLANS

E-2

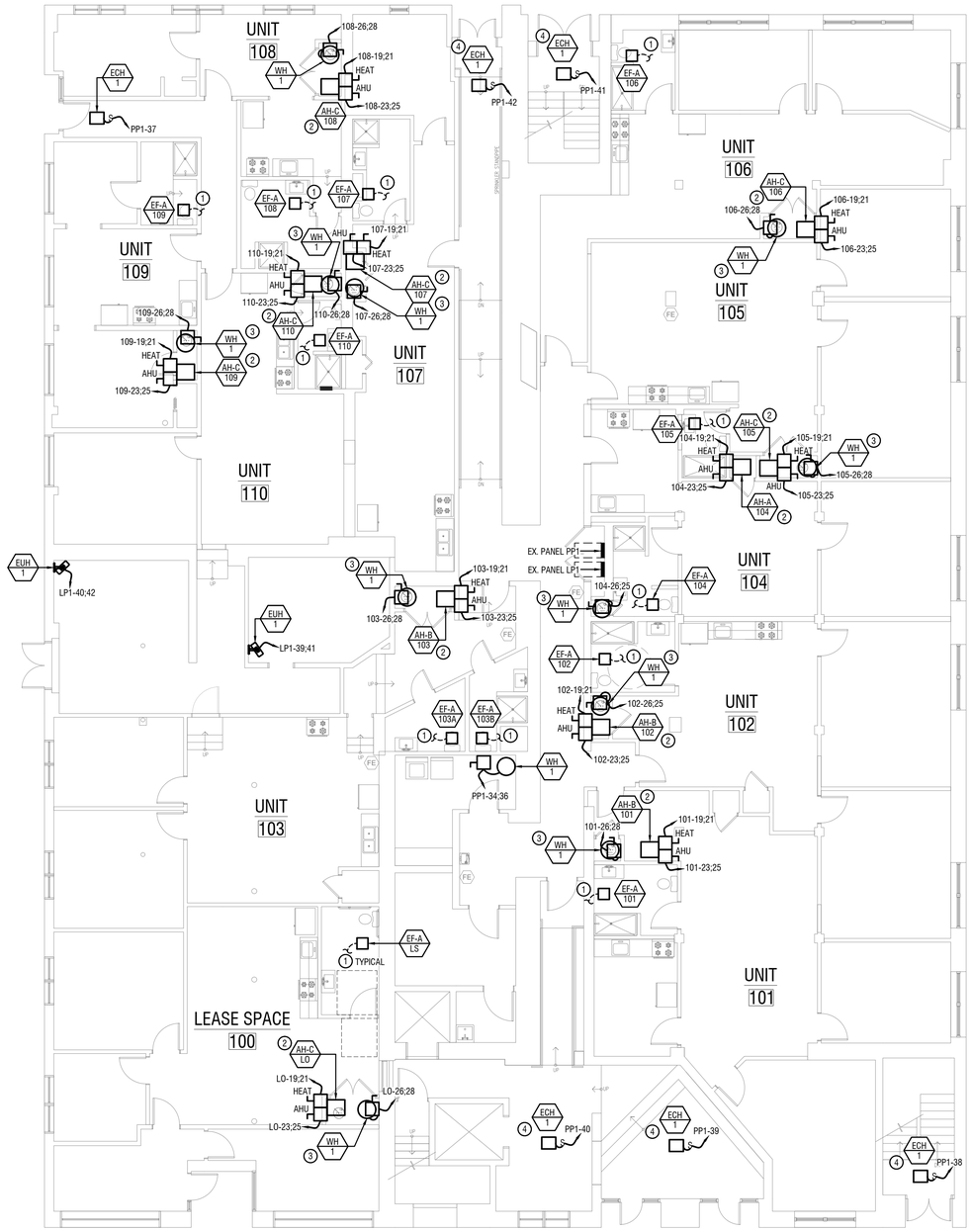

1 E-3 FIRST FLOOR MECHANICAL EQ POWER PLAN

SCALE: 1/8" = 1'-0"

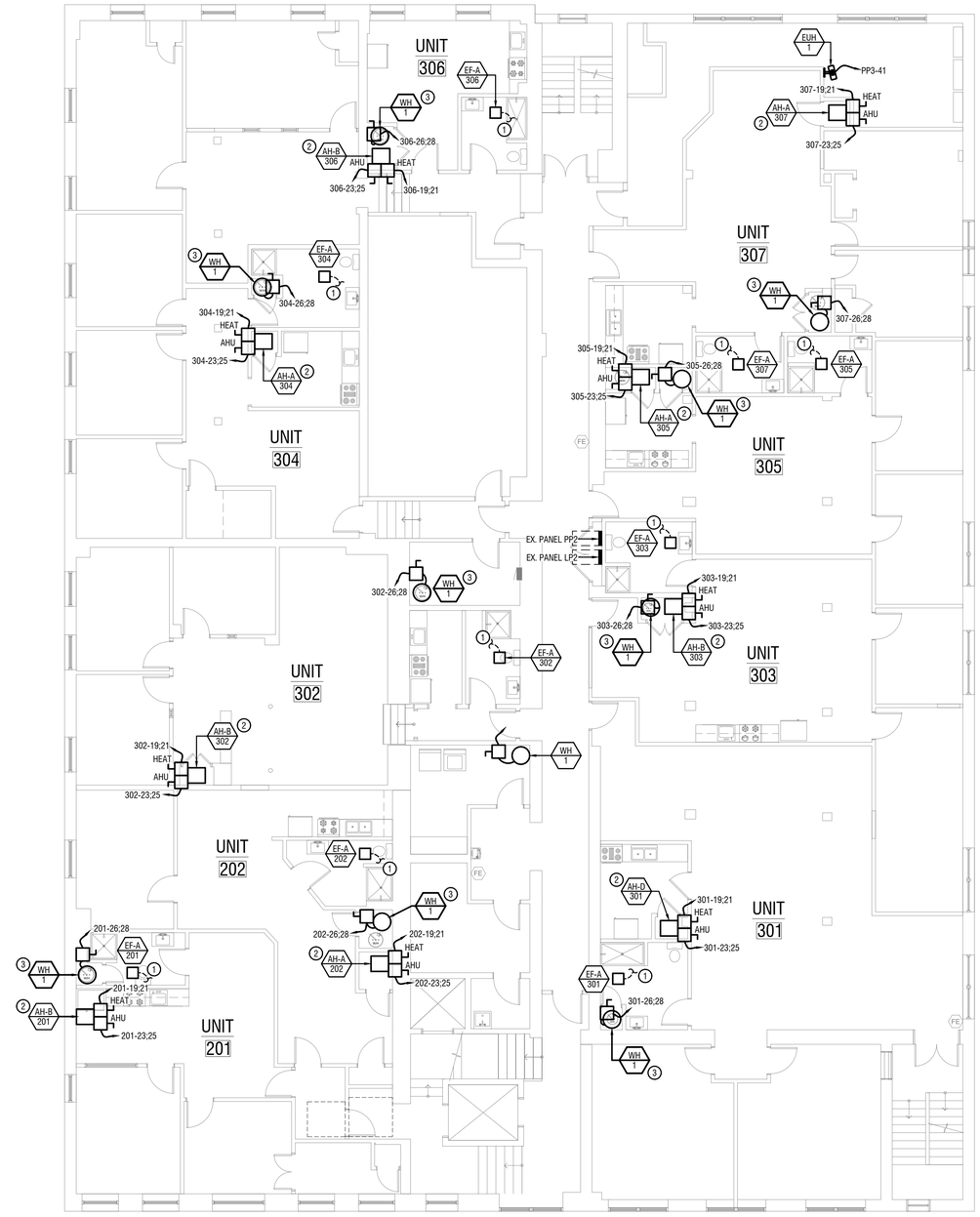

2 E-3 SECOND FLOOR MECHANICAL EQ POWER PLAN

SCALE: 1/8" = 1'-0"

GENERAL PLAN NOTES

1. ALL DEVICES SHOWN ON ELECTRICAL DRAWINGS ARE DIAGRAMMATIC IN LOCATION AND SHOWN FOR GENERAL WIRING PURPOSES ONLY. THE E.C. SHALL COORDINATE THE ACTUAL LOCATIONS, MOUNTING HEIGHTS, AND FINAL WIRING REQUIREMENTS FOR ALL EQUIPMENT, CASEWORK, DEVICES, FIXTURES, SWITCHES, SENSORS, ETC. WITH THE OWNER AND ARCHITECT PRIOR TO PERFORMING ANY ROUGH-IN WORK. MOUNT DEVICES IN A COMMON VERTICAL PLANE. PROVIDE MULTI-GANG FACE PLATES WHEREVER POSSIBLE.
2. THE E.C. SHALL COORDINATE ALL ELECTRICAL REQUIREMENTS BETWEEN TRADES TO ASSURE THE PROPER INSTALLATION OF ALL EQUIPMENT.

FIRE WALL NOTE:
SEE ARCHITECTURAL DRAWING A0.5 FOR ALL FIRE WALL LOCATIONS AND RATINGS. COORDINATE FIRE SEALING ALL PENETRATIONS THROUGH WALLS.

Client:
16-22 Union Street - Apartment Building
Client: Empire Property Construction
16-22 Union St.
Wilkes-Barre, Pa 18701

Consultants:
DMG
design management group
consulting engineers
570 299 7520
dmgeng.com

CAM architect
CAM architect, LLC
ARCHITECTS | PLANNERS
606 North Main St. Wilkes-Barre, PA 18705
T | 570| 824.3300
F | 570| 606.4966
www.camarchus.com
© 2026 CAM ARCHITECT

Seals:
PRELIMINARY - NOT FOR CONSTRUCTION
THIS COPY IS PRELIMINARY AND INCOMPLETE AND IS FOR INFORMATION PURPOSES ONLY. THIS DRAWING IS NOT INTENDED FOR CONSTRUCTION OR BIDDING. SO, AND IS NOT INTENDED FOR CONSTRUCTION WITHOUT A SEAL. SET OF CONSTRUCTION DOCUMENTS FROM THE ARCHITECT.

Revisions | Issues
No: Date:

Phase:
PERMIT/PRICING

Project: Apartment Building
Date: 06/15/2026
Drawn: DP Checked: KJS
Scale: AS NOTED
Sheet:

FIRST AND SECOND FLOOR MECH. EQ. POWER PLANS

E-3

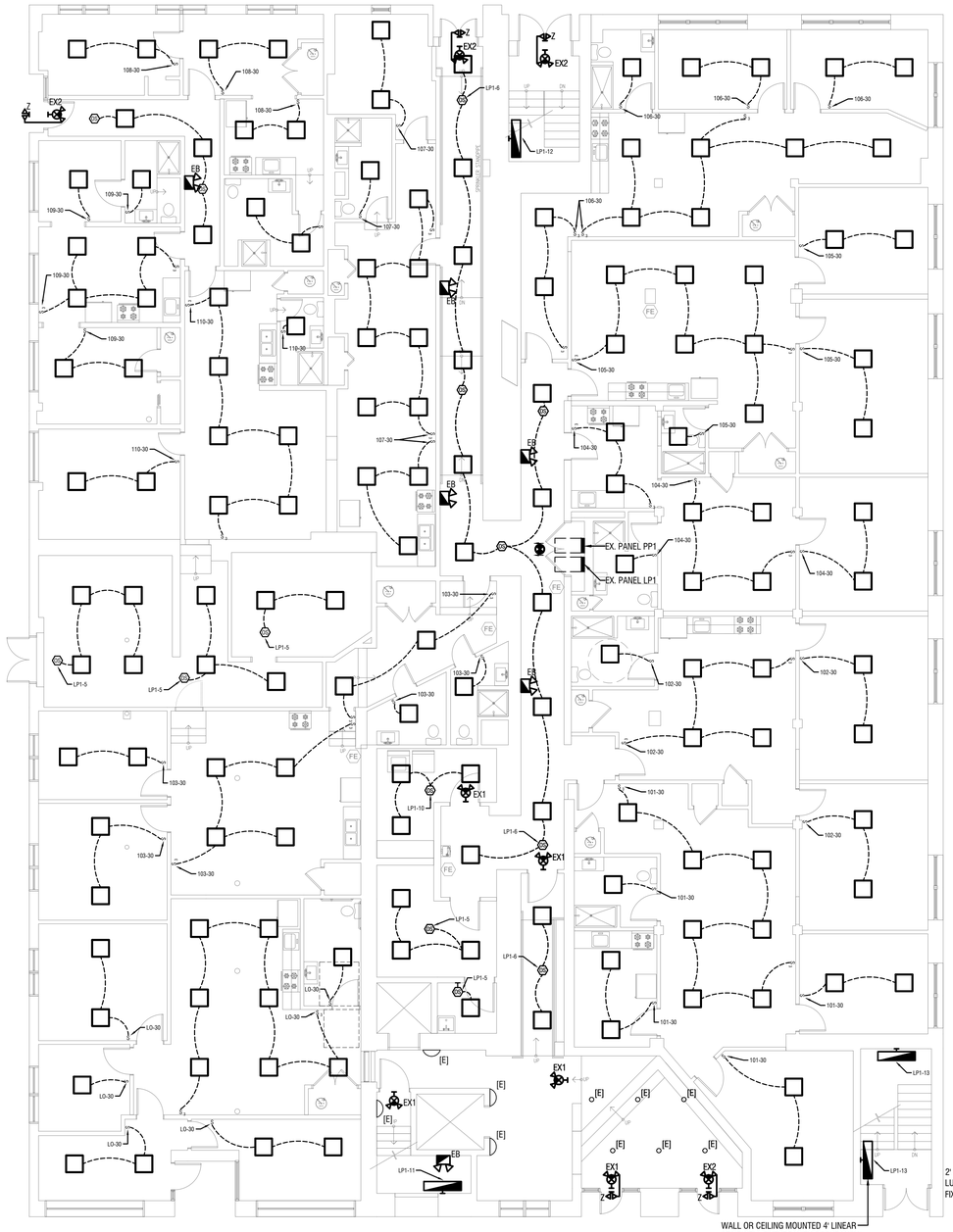

1 E-4 FIRST FLOOR LIGHTING PLAN

SCALE: 1/8" = 1'-0"

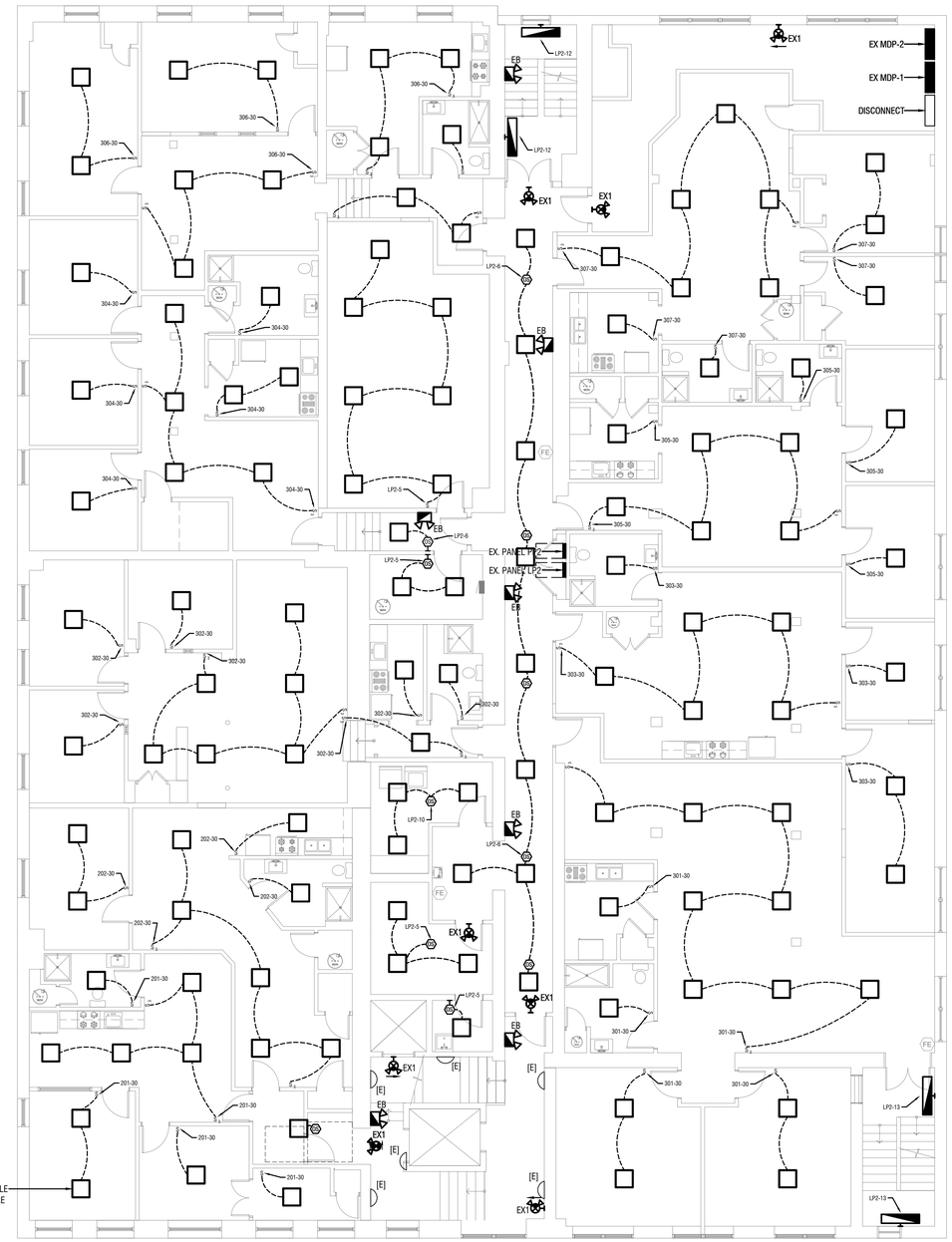

2 E-4 SECOND FLOOR LIGHTING PLAN

SCALE: 1/8" = 1'-0"

GENERAL PLAN NOTES

1. ALL DEVICES SHOWN ON ELECTRICAL DRAWINGS ARE DIAGRAMMATIC IN LOCATION AND SHOWN FOR GENERAL WIRING PURPOSES ONLY. THE E.C. SHALL COORDINATE THE ACTUAL LOCATIONS, MOUNTING HEIGHTS, AND FINAL WIRING REQUIREMENTS FOR ALL EQUIPMENT, CASEWORK, DEVICES, FIXTURES, SWITCHES, SENSORS, ETC. WITH THE OWNER AND ARCHITECT PRIOR TO PERFORMING ANY ROUGH-IN WORK. MOUNT DEVICES IN A COMMON VERTICAL PLANE. PROVIDE MULTI-GANG FACE PLATES WHEREVER POSSIBLE.
2. COORDINATE FINAL SWITCHING SCHEMES WITH OWNER PRIOR TO PURCHASING ANY EQUIPMENT.
3. EMERGENCY LIGHTING SHALL BE PROVIDED AT ALL EGRESS PATHS, OPEN OFFICE AREAS, ELECTRICAL AND MECHANICAL ROOMS, RESTROOMS, AND AS REQUIRED BY CODE.
4. ALL EXTERIOR FIXTURES SHALL BE CONTROLLED VIA TIME CLOCK AND PHOTO CELL.
5. EXIT SIGNS SHALL BE CIRCUITED AHEAD OF SWITCHED LEG OF LOCAL EMERGENCY LIGHTING CIRCUIT.

FIRE WALL NOTE:
SEE ARCHITECTURAL DRAWING A0.5 FOR ALL FIRE WALL LOCATIONS AND RATINGS. COORDINATE FIRE SEALING ALL PENETRATIONS THROUGH WALLS.

Client:
16-22 Union Street - Apartment Building
Client: Empire Property Construction
16-22 Union St.
Wilkes-Barre, Pa 18701

Consultants:
DMG
design management group
consulting engineers
570 299 7520
dmgeng.com

CAM architect
CAM architect, LLC
ARCHITECTS | PLANNERS
608 North Main St. Wilkes-Barre, PA 18705
T | 570| 824.3320
F | 570| 606.4966
www.camarchus.com

© 2026 CAM ARCHITECT

Seals:
PRELIMINARY - NOT FOR CONSTRUCTION
THIS DOCUMENT, THIS DRAWING, IS FOR INFORMATIONAL PURPOSES ONLY. THIS IS NOT INTENDED FOR CONSTRUCTION OR BIDDING. DO NOT BEGIN CONSTRUCTION WITHOUT A SEALED SET OF CONSTRUCTION DOCUMENTS FROM THE ARCHITECT.

Revisions | Issues
No: Date:

Phase:
PERMIT/PRICING

Project: Apartment Building
Date: 06/15/2026
Drawn: DP Checked: KJS
Scale: AS NOTED
Sheet:

FIRST AND SECOND FLOOR LIGHTING PLANS

E-4

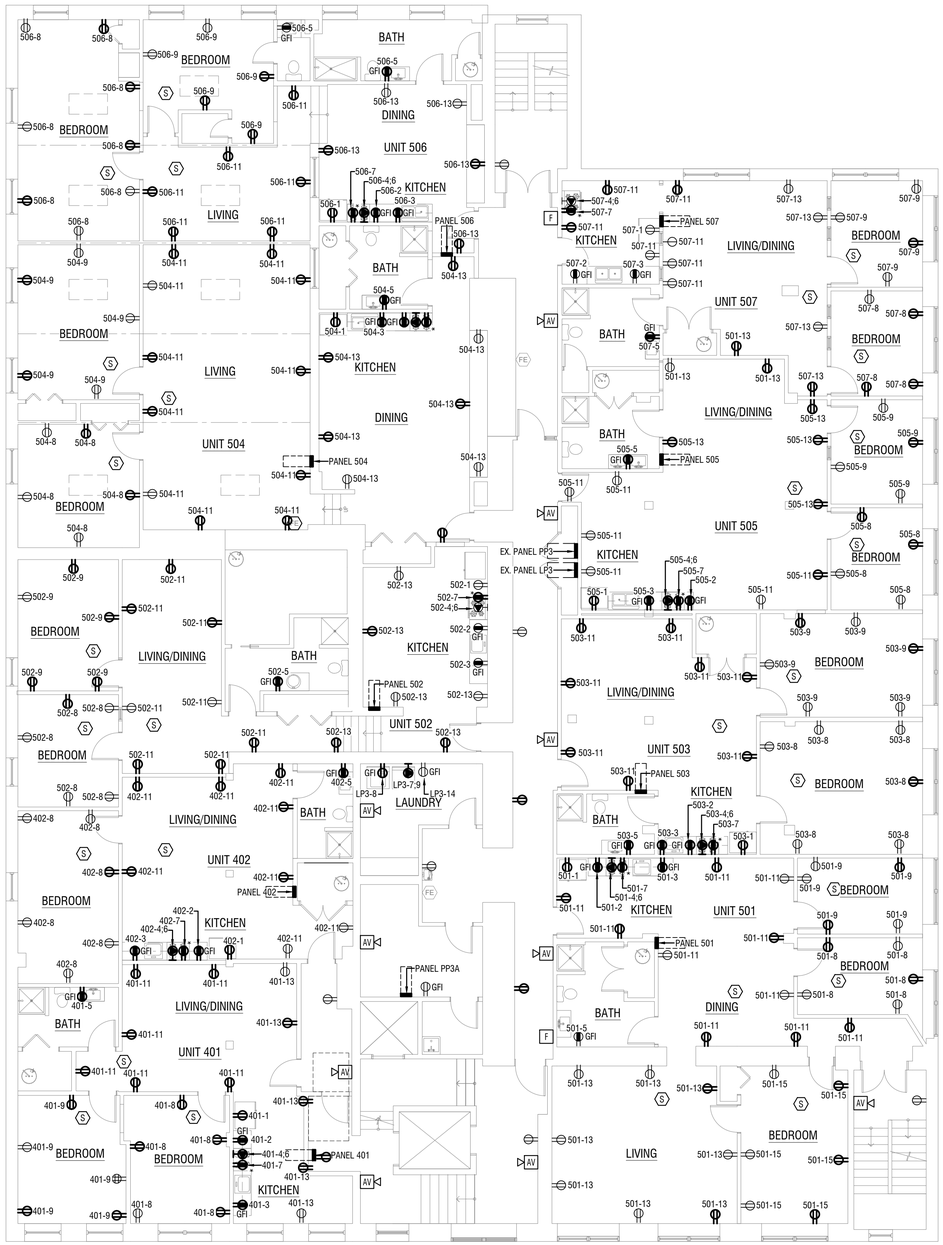

1 E-5 THIRD FLOOR POWER PLAN

SCALE: 1/8" = 1'-0"

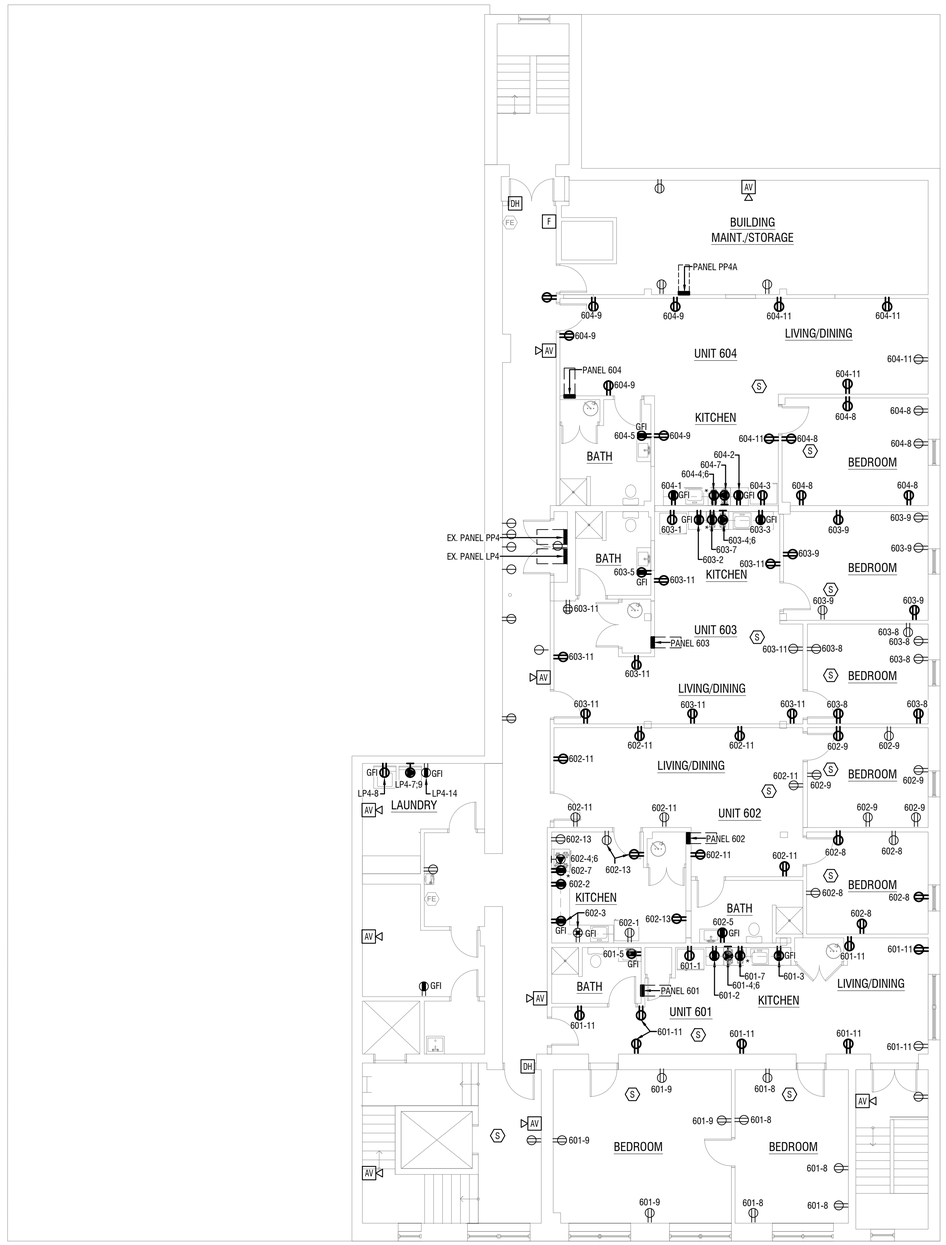

2 E-5 FOURTH FLOOR POWER PLAN

SCALE: 1/8" = 1'-0"

GENERAL PLAN NOTES

1. ALL DEVICES SHOWN ON ELECTRICAL DRAWINGS ARE DIAGRAMMATIC IN LOCATION AND SHOWN FOR GENERAL WIRING PURPOSES ONLY. THE E.C. SHALL COORDINATE THE ACTUAL LOCATIONS, MOUNTING HEIGHTS, AND FINAL WIRING REQUIREMENTS FOR ALL EQUIPMENT, CASEWORK, DEVICES, FIXTURES, SWITCHES, SENSORS, ETC. WITH THE OWNER AND ARCHITECT PRIOR TO PERFORMING ANY ROUGH-IN WORK. MOUNT DEVICES IN A COMMON VERTICAL PLANE. PROVIDE MULTI-GANG FACE PLATES WHEREVER POSSIBLE.
2. THE E.C. SHALL COORDINATE ALL ELECTRICAL REQUIREMENTS BETWEEN TRADES TO ASSURE THE PROPER INSTALLATION OF ALL EQUIPMENT.
3. ALL RECEPTACLES SHALL BE TAMPER RESISTANT PER NEC ARTICLE 406.11.
4. ALL COUNTERTOP RECEPTACLES FOR KITCHENS, KITCHENETTES, AND RESTROOMS SHALL BE GFCI-PROTECTED.
5. ALL 120V-1Ø CIRCUITS SHALL BE AFCI-PROTECTED PER NEC ARTICLE 210.12.
6. ALL RECEPTACLES WITHIN DWELLING UNIT SHALL BE SPACED PER NEC REGULATIONS SECTION 210.60 & 210.52(A) & (D). DISTANCE BETWEEN INTERIOR RECEPTACLES SHALL NOT EXCEED 12'-0", AND A RECEPTACLE MUST BE WITHIN 6'-0" OF DOORWAYS.
7. VERIFY THE FINAL LOCATION FOR THE FIRE ALARM ANNUNCIATOR PANEL WITH THE FIRE MARSHAL.

KEYED POWER CONSTRUCTION NOTES

1. COORDINATE FINAL PANEL LOCATION AND WALL CONSTRUCTION WITH OWNER PRIOR TO ROUGH-IN.
2. ABOVE COUNTER GFI SMALL APPLIANCE CIRCUIT RECEPTACLE. COORDINATE FINAL MOUNTING HEIGHT WITH OWNER AND BACKSPLASH PRIOR TO ROUGH-IN.
3. RECEPTACLE FOR MICROWAVE ABOVE RANGE. COORDINATE FINAL MOUNTING HEIGHT WITH CABINETRY AND APPLIANCE CUT SHEET.
4. ELECTRIC RANGE RECEPTACLE. COORDINATE FINAL MOUNTING LOCATION, HEIGHT, PLUG TYPE AND ELECTRICAL CHARACTERISTICS WITH CUT SHEET PRIOR TO ROUGH-IN.
5. COORDINATE ALL FIRE DOOR LOCATIONS AND FIRE ALARM DEVICES WITH ARCHITECTURAL DRAWINGS.
6. EXISTING RECEPTACLES. COORDINATE WITH OWNER RECEPTACLES TO REMAIN OR BE BLANKED OFF. UPDATE PANELBOARD SCHEDULE WITH APPROPRIATE LOCATION OF RECEPTACLES TO REMAIN.

FIRE ALARM SYSTEM CONTACT:
EASTERN TIME INC.
JUSTIN EDDY
(570) 840-1473
JustinE@EASTERN-TIME.COM

FIRE WALL NOTE:
SEE ARCHITECTURAL DRAWING A0.5 FOR ALL FIRE WALL LOCATIONS AND RATINGS. COORDINATE FIRE SEALING ALL PENETRATIONS THROUGH WALLS.

Client:
16-22 Union Street - Apartment Building
Client: Empire Property Construction
16-22 Union St.
Wilkes-Barre, Pa 18701

Consultants:
DMG
design management group
consulting engineers
(570) 702-0001
dmgeng.com

CAM architect
CAM architect, LLC
ARCHITECTS | PLANNERS
606 North Main St. Wilkes-Barre, PA 18705
T | (570) 824-3220
F | (570) 826-9466
www.camarchus.com

© 2026 CAM ARCHITECT

Seals:
PRELIMINARY - NOT FOR CONSTRUCTION
THIS COPY IS FOR PRELIMINARY OR INFORMATION PURPOSES ONLY AND IS NOT INTENDED FOR CONSTRUCTION OR BIDDING. DO NOT START CONSTRUCTION WITHOUT THE SEALED SET OF CONSTRUCTION DOCUMENTS FROM THE ARCHITECT.

Revisions | Issues
No: Date:

Phase:
PERMIT/PRICING

Project: Apartment Building
Date: 06/15/2026
Drawn: DP Checked: KJS
Scale: AS NOTED
Sheet:

THIRD AND FOURTH FLOOR NEW POWER PLANS

E-5

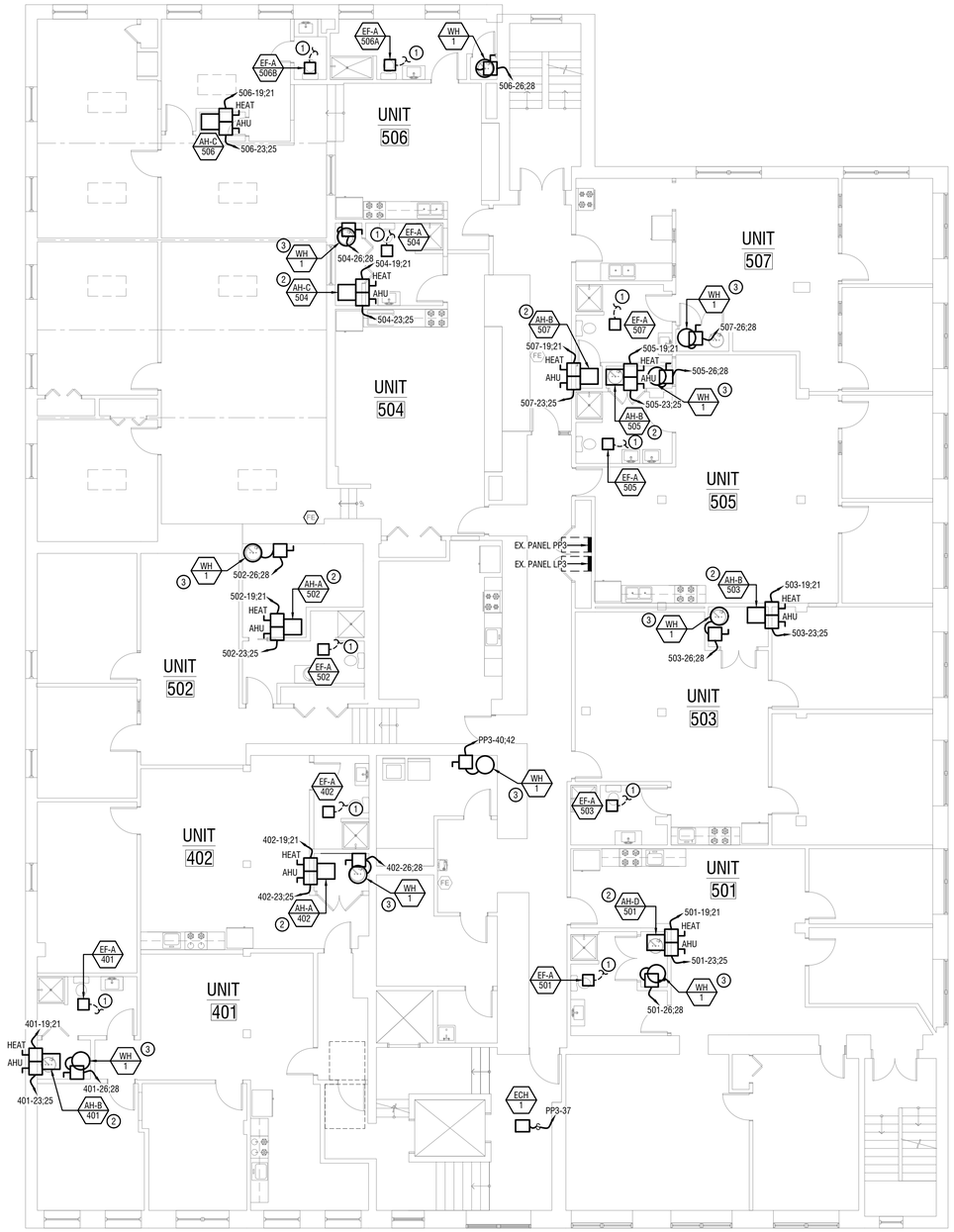

1 E-6 THIRD FLOOR MECHANICAL EQ POWER PLAN

SCALE: 1/8" = 1'-0"

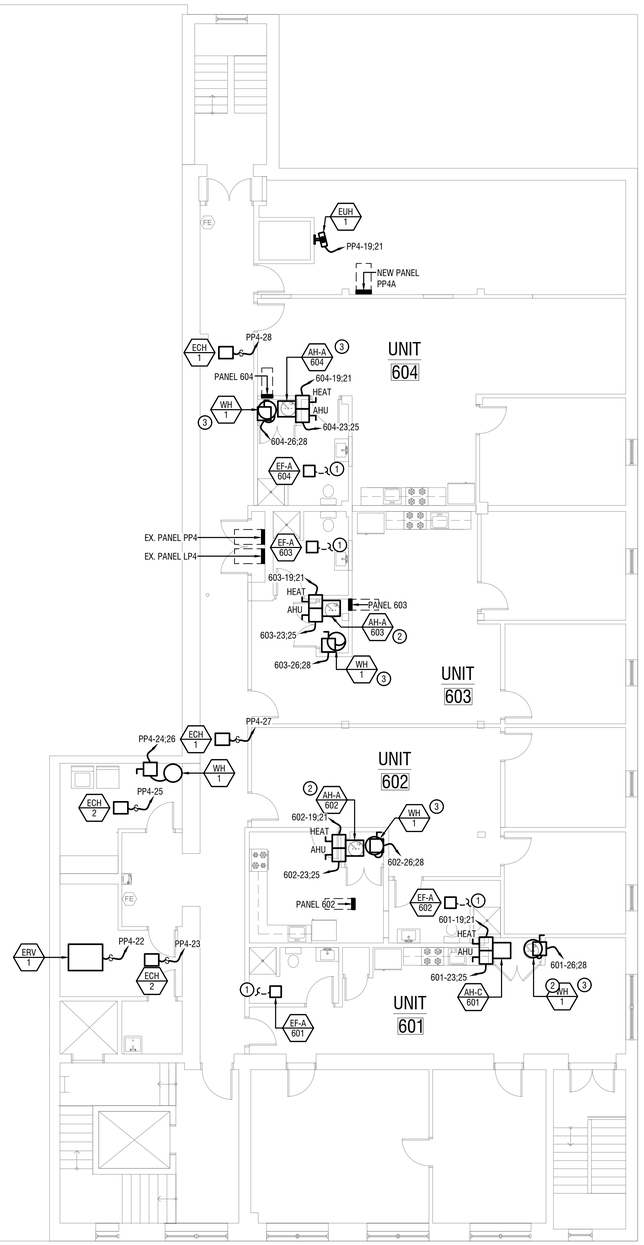

2 E-6 FOURTH FLOOR MECHANICAL EQ POWER PLAN

SCALE: 1/8" = 1'-0"

GENERAL PLAN NOTES

1. ALL DEVICES SHOWN ON ELECTRICAL DRAWINGS ARE DIAGRAMMATIC IN LOCATION AND SHOWN FOR GENERAL WIRING PURPOSES ONLY. THE E.C. SHALL COORDINATE THE ACTUAL LOCATIONS, MOUNTING HEIGHTS, AND FINAL WIRING REQUIREMENTS FOR ALL EQUIPMENT, CASEWORK, DEVICES, FIXTURES, SWITCHES, SENSORS, ETC. WITH THE OWNER AND ARCHITECT PRIOR TO PERFORMING ANY ROUGH-IN WORK. MOUNT DEVICES IN A COMMON VERTICAL PLANE. PROVIDE MULTI-GANG FACE PLATES WHEREVER POSSIBLE.
2. THE E.C. SHALL COORDINATE ALL ELECTRICAL REQUIREMENTS BETWEEN TRADES TO ASSURE THE PROPER INSTALLATION OF ALL EQUIPMENT.

FIRE WALL NOTE:
SEE ARCHITECTURAL DRAWING A0.5 FOR ALL FIRE WALL LOCATIONS AND RATINGS. COORDINATE FIRE SEALING ALL PENETRATIONS THROUGH WALLS.

Client:
16-22 Union Street - Apartment Building
Client: Empire Property Construction
16-22 Union St.
Wilkes-Barre, Pa 18701

Consultants:
DMG
design management group
consulting engineers
570.702.2500
dmgeng.com

CAM architect
CAM architect, LLC
ARCHITECTS | PLANNERS
606 North Main St. Wilkes-Barre, PA 18705
T. [570] 824-3320
F. [570] 606-9966
www.camarchus.com

© 2026 CAM ARCHITECT

Seals:

PRELIMINARY - NOT FOR CONSTRUCTION
THIS COPY IS PRELIMINARY AND FOR INFORMATION PURPOSES ONLY AND NOT INTENDED FOR CONSTRUCTION OR BIDDING. DO NOT START CONSTRUCTION WITHOUT THE SEAL AND SIGNATURE OF ARCHITECT OF CONSTRUCTION DOCUMENTS FROM THE ARCHITECT.

Revisions | Issues

No:	Date:

Phase:
PERMIT/PRICING

Project: Apartment Building
Date: 06/15/2026
Drawn: DP Checked: KJS
Scale: AS NOTED
Sheet:

THIRD AND FOURTH FLOOR MECH. EQ. POWER PLANS

E-6

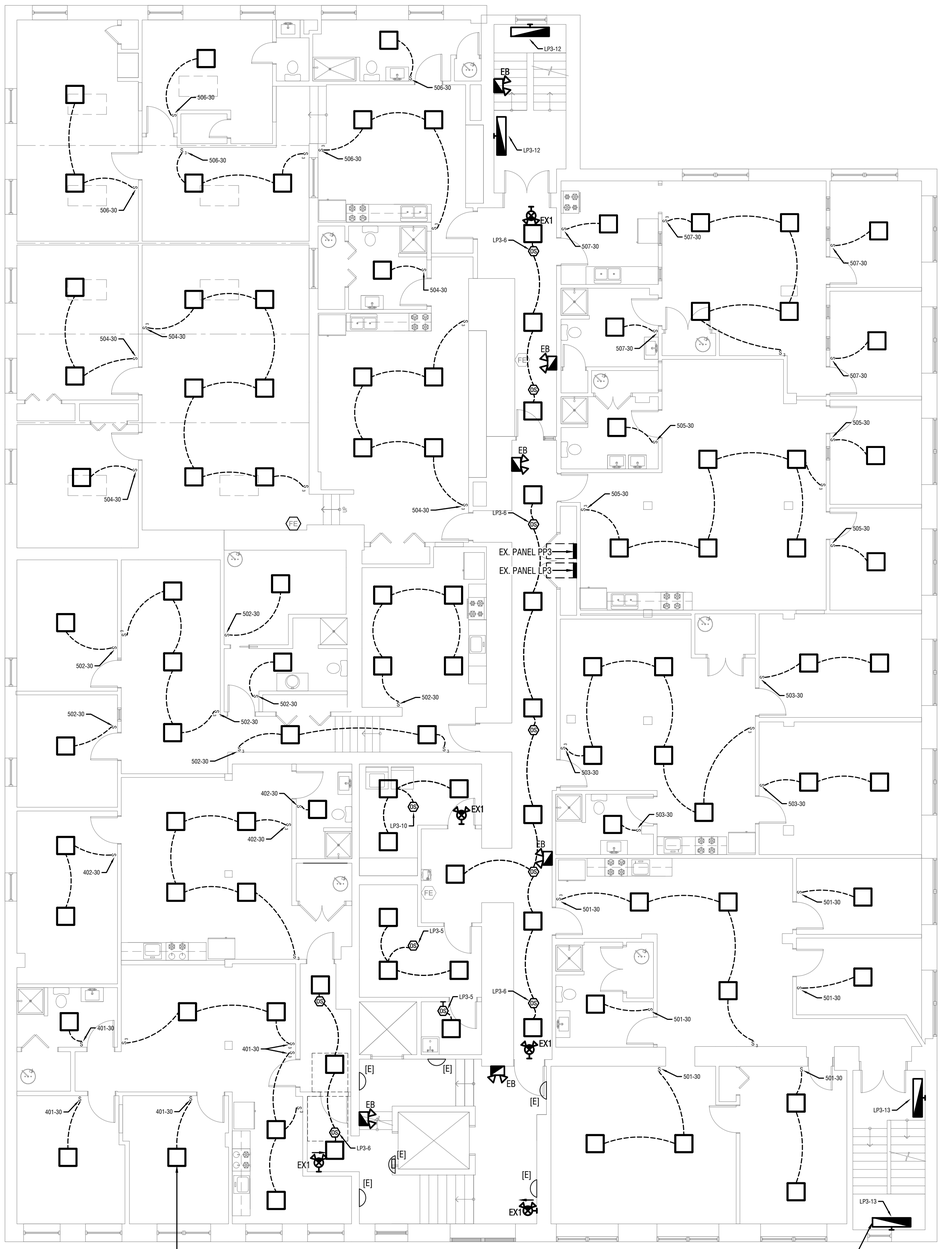

1 / E-7 THIRD FLOOR LIGHTING PLAN

SCALE: 1/8" = 1'-0"

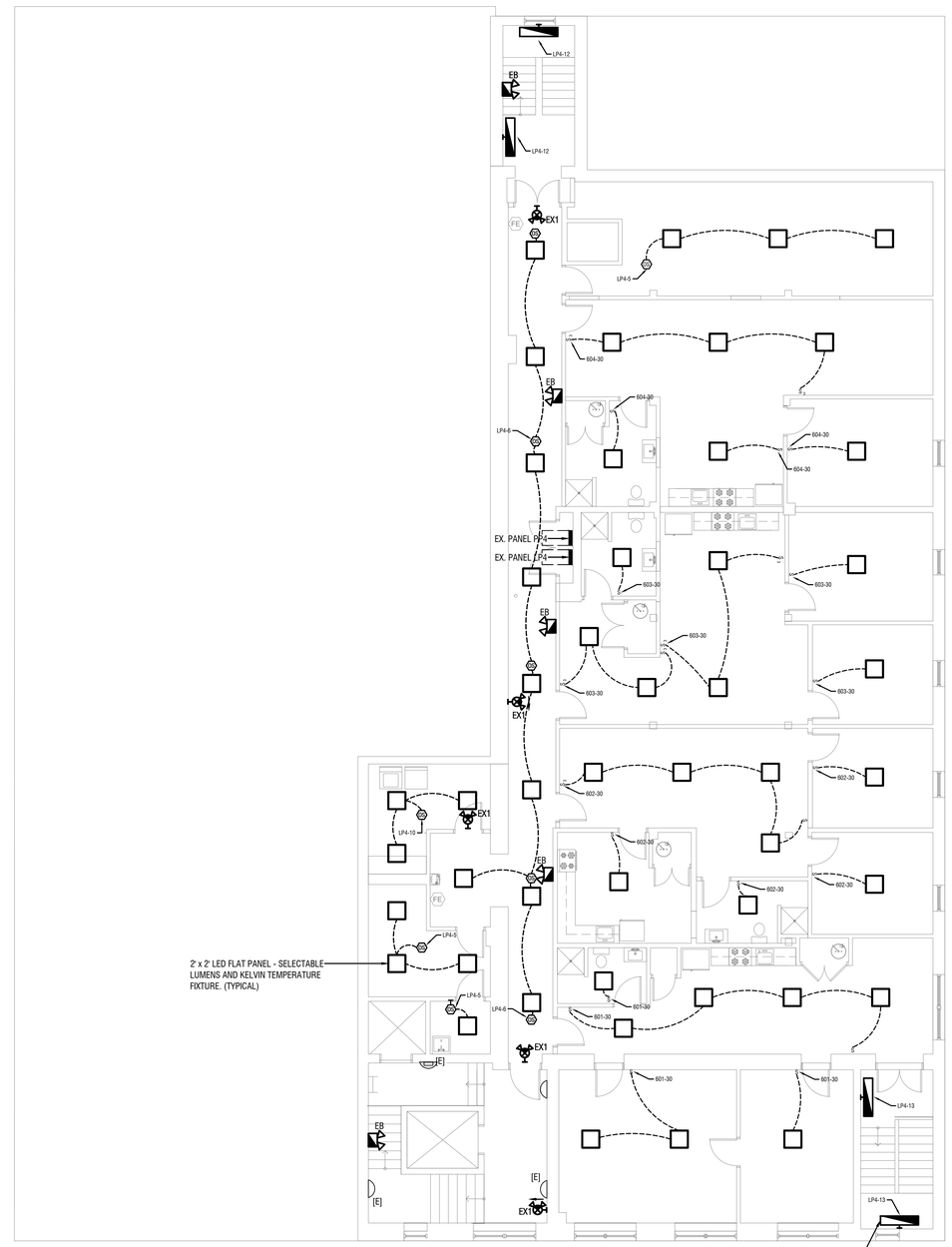

1 / E-7 FOURTH FLOOR LIGHTING PLAN

SCALE: 1/8" = 1'-0"

GENERAL PLAN NOTES

1. ALL DEVICES SHOWN ON ELECTRICAL DRAWINGS ARE DIAGRAMMATIC IN LOCATION AND SHOWN FOR GENERAL WIRING PURPOSES ONLY. THE E.C. SHALL COORDINATE THE ACTUAL LOCATIONS, MOUNTING HEIGHTS, AND FINAL WIRING REQUIREMENTS FOR ALL EQUIPMENT, CASEWORK, DEVICES, FIXTURES, SWITCHES, SENSORS, ETC. WITH THE OWNER AND ARCHITECT PRIOR TO PERFORMING ANY ROUGH-IN WORK. MOUNT DEVICES IN A COMMON VERTICAL PLANE. PROVIDE MULTI-GANG FACE PLATES WHEREVER POSSIBLE.
2. COORDINATE FINAL SWITCHING SCHEMES WITH OWNER PRIOR TO PURCHASING ANY EQUIPMENT.
3. EMERGENCY LIGHTING SHALL BE PROVIDED AT ALL EGRESS PATHS, OPEN OFFICE AREAS, ELECTRICAL AND MECHANICAL ROOMS, RESTROOMS, AND AS REQUIRED BY CODE.
4. ALL EXTERIOR FIXTURES SHALL BE CONTROLLED VIA TIME CLOCK AND PHOTO CELL.
5. EXIT SIGNS SHALL BE CIRCUITED AHEAD OF SWITCHED LEG OF LOCAL EMERGENCY LIGHTING CIRCUIT.

FIRE WALL NOTE:
SEE ARCHITECTURAL DRAWING A0.5 FOR ALL FIRE WALL LOCATIONS AND RATINGS. COORDINATE FIRE SEALING ALL PENETRATIONS THROUGH WALLS.

Client:
16-22 Union Street - Apartment Building
Client: Empire Property Construction
16-22 Union St.
Wilkes-Barre, Pa 18701

Consultants:
DMG
design management group
consulting engineers
570.970.9000
dmgeng.com

CAM architect
CAM architect, LLC
ARCHITECTS | PLANNERS
606 North Main St. Wilkes-Barre, PA 18705
T | (570) 824-3320
F | (570) 606-9466
www.camarchus.com

© 2026 CAM ARCHITECT

Seals:
PRELIMINARY - NOT FOR CONSTRUCTION
THIS DOCUMENT IS PRELIMINARY IN NATURE AND IS FOR INFORMATION PURPOSES OR PLEDGING ONLY AND IS NOT INTENDED FOR CONSTRUCTION OR BIDDING. DO NOT START CONSTRUCTION WITHOUT THE SEALED SET OF CONSTRUCTION DOCUMENTS FROM THE ARCHITECT.

Revisions | Issues
No: Date:

Phase:
PERMIT/PRICING

Project: Apartment Building
Date: 06/15/2026
Drawn: DP Checked: KJS
Scale: AS NOTED
Sheet:

THIRD AND FOURTH FLOOR LIGHTING PLANS

E-7

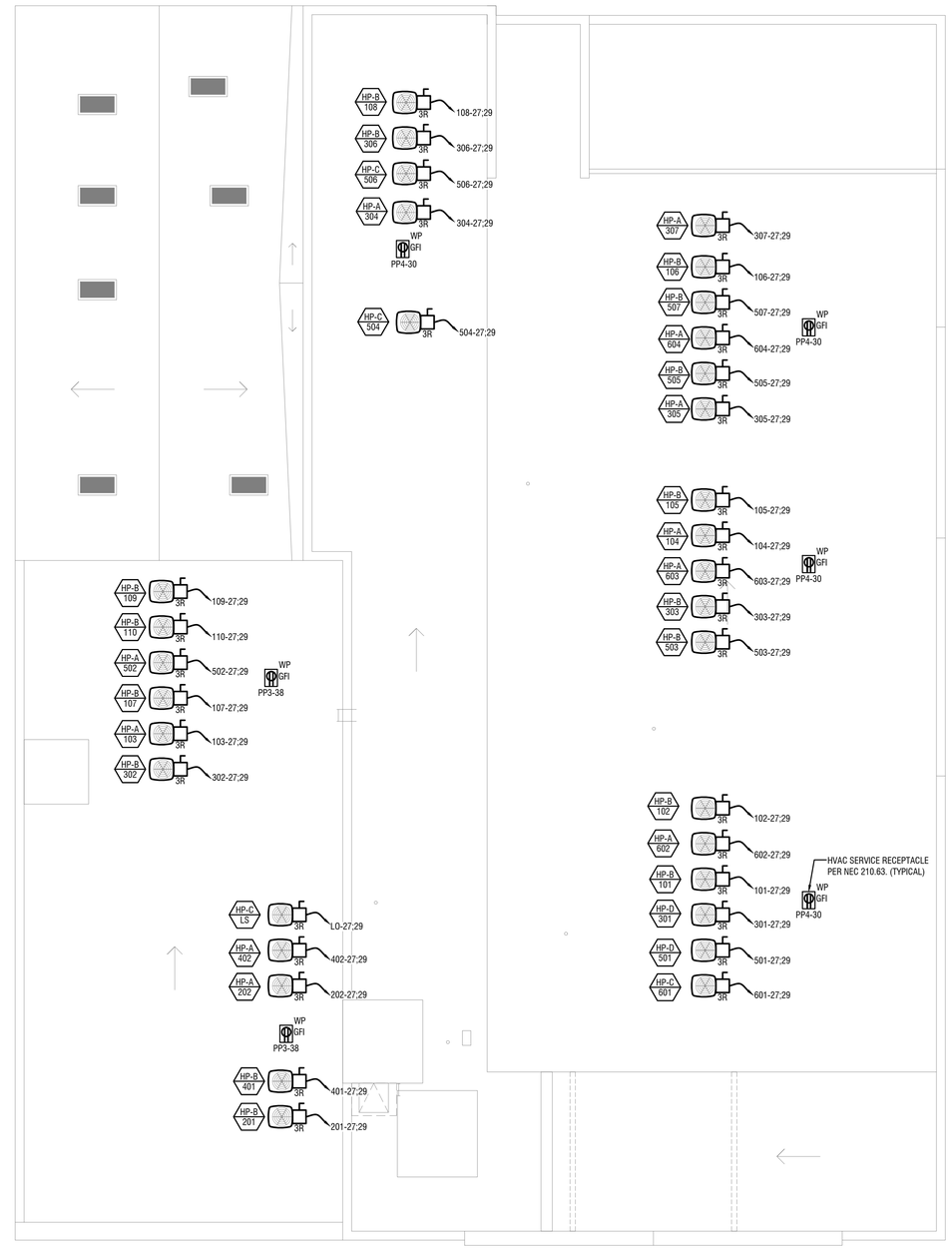

GENERAL PLAN NOTES

1. ALL DEVICES SHOWN ON ELECTRICAL DRAWINGS ARE DIAGRAMMATIC IN LOCATION AND SHOWN FOR GENERAL WIRING PURPOSES ONLY. THE E.C. SHALL COORDINATE THE ACTUAL LOCATIONS, MOUNTING HEIGHTS, AND FINAL WIRING REQUIREMENTS FOR ALL EQUIPMENT, CASEWORK, DEVICES, FIXTURES, SWITCHES, SENSORS, ETC. WITH THE OWNER AND ARCHITECT PRIOR TO PERFORMING ANY ROUGH-IN WORK. MOUNT DEVICES IN A COMMON VERTICAL PLANE. PROVIDE MULTI-GANG FACE PLATES WHEREVER POSSIBLE.
2. THE E.C. SHALL COORDINATE ALL ELECTRICAL REQUIREMENTS BETWEEN TRADES TO ASSURE THE PROPER INSTALLATION OF ALL EQUIPMENT.

1 / E-8 ROOF POWER FLOOR PLAN

SCALE: 1/8" = 1'-0"

FIRE WALL NOTE:

SEE ARCHITECTURAL DRAWING A0.5 FOR ALL FIRE WALL LOCATIONS AND RATINGS. COORDINATE FIRE SEALING ALL PENETRATIONS THROUGH WALLS.

Client:

16-22 Union Street - Apartment Building

Client: Empire Property Construction
16-22 Union St.
Wilkes-Barre, Pa 18701

Consultants:

DMG
design management group
consulting engineers
T | 570.829.7300
dmgeng.com

CAM architect, LLC
ARCHITECTS | PLANNERS
606 North Main St. Wilkes-Barre, PA 18705
T. | 570| 824.3320
F. | 570| 606.9966
www.camarchus.com

© 2026 CAM ARCHITECT

Seals:

PRELIMINARY - NOT FOR CONSTRUCTION
THIS COPY IS FOR DRAWING REVIEW FOR INFORMATIONAL PURPOSES ONLY AND NOT INTENDED FOR CONSTRUCTION OR BIDDING. DO NOT START CONSTRUCTION WITHOUT THE SEALED SET OF CONSTRUCTION DOCUMENTS FROM THE ARCHITECT.

Revisions | Issues

No: Date:

Phase:

PERMIT/PRICING

Project:	Apartment Building		
Date:	06/15/2026		
Drawn:	DP	Checked:	KJS
Scale:	AS NOTED		
Sheet:			

ROOF NEW POWER PLAN

E-8

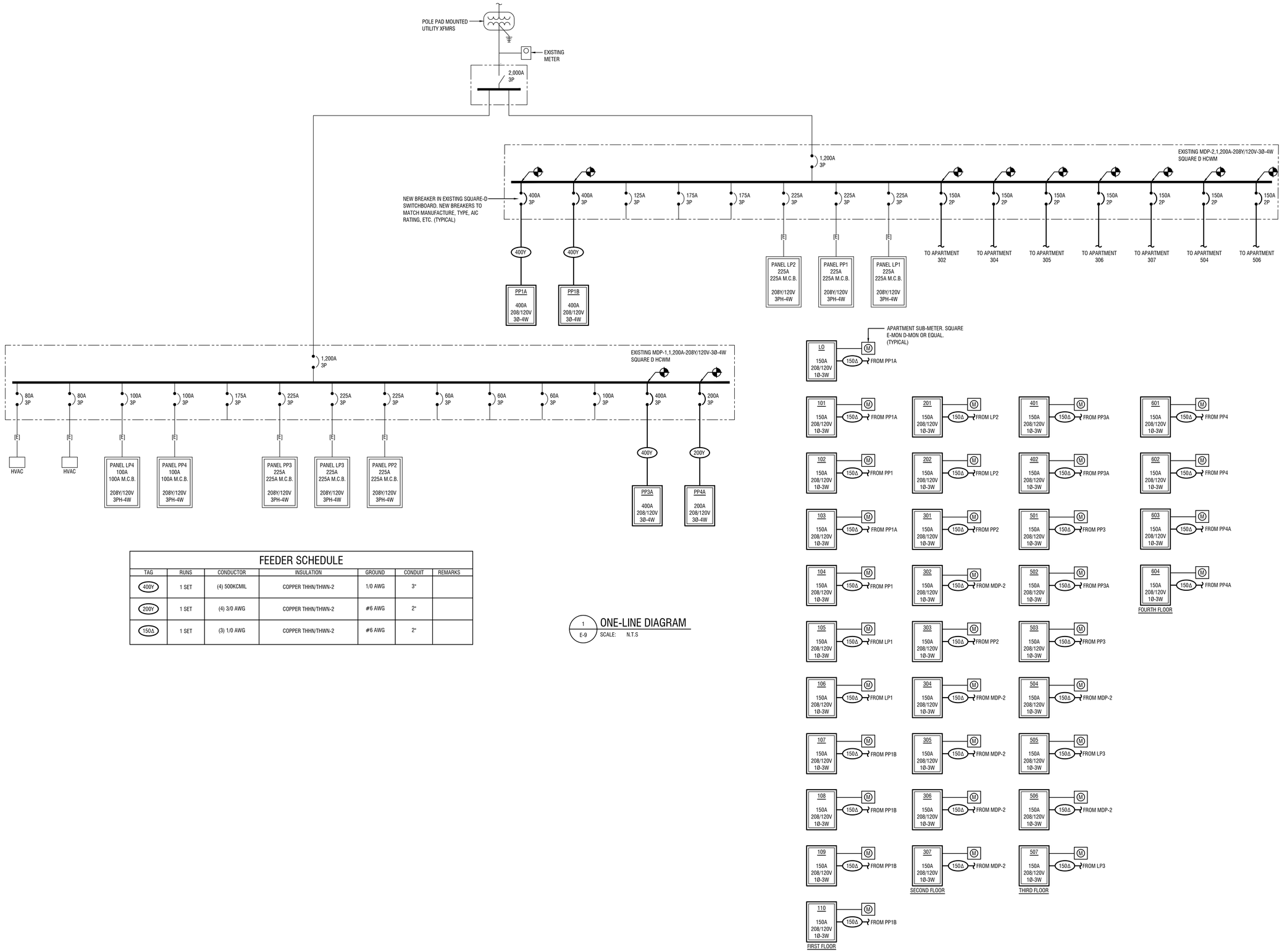

FEEDER SCHEDULE

TAG	RUNS	CONDUCTOR	INSULATION	GROUND	CONDUIT	REMARKS
400Y	1 SET	(4) 500KCMIL	COPPER THHN/THWN-2	1/0 AWG	3"	
200Y	1 SET	(4) 3/0 AWG	COPPER THHN/THWN-2	#6 AWG	2"	
150Δ	1 SET	(3) 1/0 AWG	COPPER THHN/THWN-2	#6 AWG	2"	

1 / E-9 ONE-LINE DIAGRAM

SCALE: N.T.S

Client:

16-22 Union Street - Apartment Building

Client: Empire Property Construction
16-22 Union St.
Wilkes-Barre, Pa 18701

Consultants:

DMG
design management group
consulting engineers
570.704.2000
dmgeng.com

CAM architect

CAM architect, LLC
ARCHITECTS | PLANNERS
606 North Main St. Wilkes-Barre, PA 18705
T | 570| 824-3320
F | 570| 606-9466
www.camarchus.com

© 2026 CAM ARCHITECT

Seals:

PRELIMINARY - NOT FOR CONSTRUCTION
THIS COMPUTER FILE/DRAWING IS FOR INFORMATIONAL PURPOSES ONLY AND IS NOT INTENDED FOR CONSTRUCTION OR BIDDING. DO NOT START CONSTRUCTION WITHOUT A SEALED SET OF CONSTRUCTION DOCUMENTS FROM THE ARCHITECT.

Revisions | Issues

No: Date:

Phase:

PERMIT/PRICING

Project: Apartment Building
Date: 06/15/2026
Drawn: DP Checked: KJS
Scale: AS NOTED
Sheet:

ELECTRICAL ONE-LINE DIAGRAM

E-9

EXISTING SWITCHBOARD SCHEDULE

DESIGNATION: **MDP-1** | MAINS: 1,200A | TYPE: | O.C. DEVICE: | VOLTAGE: 208/120V-3Ø-4W | MIN. AIC RATING: EXISTING | LOCATION: SEE FLOOR PLANS | SUPPLY: UTILITY | MOUNTING: SURFACE | SINGLE: X | DOUBLE: | TRIPLE:

CKT	POLE	TRIP	WIRE	GND	C	LOAD	KVA Ø A	KVA Ø B	KVA Ø C	LOAD	C	GND	WIRE	TRIP	POLE	CKT
1	/														/	2
3	3	80				SPARE				SPARE				60	3	4
5	/														/	6
7	/														/	8
9	3	80				SPARE				SPARE				60	3	10
11	/														/	12
13	/						4.18								/	14
15	3	100	E	E	E	EXISTING PANEL LP4		3.00		SPARE				60	3	16
17	/								2.00						/	18
19	/						4.00								/	20
21	3	100	E	E	E	EXISTING PANEL PP4		6.65		SPARE				100	3	22
23	/								3.47						/	24
25	/						**47.72**								/	26
27	3	175				SPARE		**30.40**		**NEW PANEL PP3A**	*	*	*	**400**	**3**	28
29	/								**15.92**						/	30
31	/						35.79	**29.86**							/	32
33	3	225	E	E	E	EXISTING PANEL PP3		35.54	**31.38**	**NEW PANEL PP4A**	*	*	*	**200**	**3**	34
35	/								2.25	**0.00**					/	36
37	/						37.12			SPACE						38
39	3	225	E	E	E	EXISTING PANEL LP3		34.94		SPACE						40
41	/								2.00	SPACE						42
43	/						33.39			SPACE						44
45	3	225	E	E	E	EXISTING PANEL PP2		34.19		SPACE						46
47	/								0.00	SPACE						48
						TOTAL/PHASE	158.67	141.91	25.64							

*** SEE ONE-LINE DIAGRAM**
**** CONDUCTORS SHALL BE IN EMT CONDUIT WHERE SUBJECT TO PHYSICAL DAMAGE. METAL CLAD (MC) CAN BE USED IN CONCELED PLACES AND NOT SUBJECT TO PHYSICAL DAMAGE.**
*****LOCKED BREAKER**

CONNECTED LOAD 326.22 (kVA)
DEMAND LOAD @ 0.80 260.98 (kVA)
DEMAND 724.40 (A)

EXISTING PANELBOARD SCHEDULE

DESIGNATION: **PP2** | MAINS: 225A | TYPE: | O.C. DEVICE: 225A M.C.B. | VOLTAGE: 208/120V-3Ø-4W | MIN. AIC RATING: EXISTING | LOCATION: SEE FLOOR PLANS | SUPPLY: MDP-1 | MOUNTING: SURFACE | SINGLE: X | DOUBLE: | TRIPLE:

CKT	POLE	TRIP	WIRE	GND	C	LOAD	KVA Ø A	KVA Ø B	KVA Ø C	LOAD	C	GND	WIRE	TRIP	POLE	CKT
1	**2**	**150**	*	*	*	**APARTMENT 301**	**17.91**	**15.48**		**APARTMENT 303**	*	*	*	**150**	**2**	2
3	/							**17.05**	**17.14**						/	4
5	1	20				EXISTING				EXISTING				20	1	6
7	1	20				EXISTING				EXISTING				20	1	8
9	1	20				EXISTING				EXISTING				20	1	10
11	1	20				EXISTING				EXISTING				20	1	12
13	1	20				EXISTING				EXISTING				20	1	14
15	1	20				EXISTING				EXISTING				20	1	16
17	1	20				EXISTING				EXISTING				20	1	18
19	1	20				EXISTING				EXISTING				20	1	20
21	1	20				EXISTING				EXISTING				20	1	22
23	1	20				EXISTING				EXISTING				20	1	24
25	1	20				EXISTING				EXISTING				20	1	26
27	2	100				EXISTING				EXISTING				20	1	28
29	/									EXISTING				20	2	30
31	1	20				EXISTING									/	32
33	1	20				EXISTING				EXISTING				100	2	34
35	1	20				EXISTING									/	36
37	1	20				EXISTING				SPACE						38
39	2	100				EXISTING				EXISTING				20	1	40
41	/									EXISTING				20	1	42
						TOTAL/PHASE	33.39	34.19	0.00							

*** SEE ONE-LINE DIAGRAM**
**** CONDUCTORS SHALL BE IN EMT CONDUIT WHERE SUBJECT TO PHYSICAL DAMAGE. METAL CLAD (MC) CAN BE USED IN CONCELED PLACES AND NOT SUBJECT TO PHYSICAL DAMAGE.**
*****LOCKED BREAKER**

CONNECTED LOAD 67.58 (kVA)
DEMAND LOAD @ 0.80 54.06 (kVA)
DEMAND 150.07 (A)

EXISTING PANELBOARD SCHEDULE

DESIGNATION: **LP3** | MAINS: 225A | TYPE: | O.C. DEVICE: 225A M.C.B. | VOLTAGE: 208/120V-3Ø-4W | MIN. AIC RATING: EXISTING | LOCATION: SEE FLOOR PLANS | SUPPLY: MDP-1 | MOUNTING: SURFACE | SINGLE: X | DOUBLE: | TRIPLE:

CKT	POLE	TRIP	WIRE	GND	C	LOAD	KVA Ø A	KVA Ø B	KVA Ø C	LOAD	C	GND	WIRE	TRIP	POLE	CKT
1	**2**	**150**	*	*	*	**APARTMENT 505**	**16.56**	**16.38**		**APARTMENT 507**	*	*	*	**150**	**2**	2
3	/							**15.88**	**16.06**						/	4
5	1	20	**12**	**12**	**	**MAINTENANCE AREA LIGHTING**			**0.50**	**0.50**	**CORRIDOR LIGHTING**	**	**12**	**12**	20	1	6
7	2	30	**10**	**10**	**	**DRYER**	**2.50**	**1.00**			**WASHER**	**	**12**	**12**	20	1	8
9	/							**2.50**	**0.50**		**LAUNDRY LIGHTING**	**	**12**	**12**	20	1	10
11	1	20	**12**	**12**	**	**ELEVATOR STAIRWELL LIGHTING**			**0.50**	**0.50**	**NORTH STAIRWELL LIGHTING**	**	**12**	**12**	20	1	12
13	1	20	**12**	**12**	**	**SOUTH STAIRWELL LIGHTING**	**0.50**	**0.18**			**LAUNDRY RECEPTS**	**	**12**	**12**	20	1	14
15	1	20				EXISTING				EXISTING				20	1	16
17	1	20				EXISTING				EXISTING				20	1	18
19	1	20				EXISTING				EXISTING				50	2	20
21	1	20				EXISTING									/	22
23	1	20				EXISTING				EXISTING				20	1	24
25	2	50				EXISTING				EXISTING				20	1	26
27	/									EXISTING				20	1	28
29	1	20				EXISTING				EXISTING				20	1	30
31	1	20				EXISTING				SPACE						32
33	1	20				EXISTING				EXISTING				50	2	34
35	2	30				EXISTING									/	36
37	/									EXISTING				50	1	38
39						SPACE				SPACE						40
41						SPACE				SPACE						42
						TOTAL/PHASE	37.12	34.94	2.00							

*** SEE ONE-LINE DIAGRAM**
**** CONDUCTORS SHALL BE IN EMT CONDUIT WHERE SUBJECT TO PHYSICAL DAMAGE. METAL CLAD (MC) CAN BE USED IN CONCELED PLACES AND NOT SUBJECT TO PHYSICAL DAMAGE.**
*****LOCKED BREAKER**

CONNECTED LOAD 74.06 (kVA)
DEMAND LOAD @ 0.80 59.25 (kVA)
DEMAND 164.46 (A)

EXISTING PANELBOARD SCHEDULE

DESIGNATION: **PP3** | MAINS: 225A | TYPE: | O.C. DEVICE: 225A M.C.B. | VOLTAGE: 208/120V-3Ø-4W | MIN. AIC RATING: EXISTING | LOCATION: SEE FLOOR PLANS | SUPPLY: MDP-1 | MOUNTING: SURFACE | SINGLE: X | DOUBLE: | TRIPLE:

CKT	POLE	TRIP	WIRE	GND	C	LOAD	KVA Ø A	KVA Ø B	KVA Ø C	LOAD	C	GND	WIRE	TRIP	POLE	CKT
1	**2**	**150**	*	*	*	**APARTMENT 501**	**18.09**	**15.84**		**APARTMENT 503**	*	*	*	**150**	**2**	2
3	/							**16.69**	**16.60**						/	4
5	1	20				EXISTING				EXISTING				20	1	6
7	1	20				EXISTING				EXISTING				20	1	8
9	1	20				EXISTING				EXISTING				20	1	10
11	1	20				EXISTING				EXISTING				20	1	12
13	1	20				EXISTING				EXISTING				20	1	14
15	1	20				EXISTING				EXISTING				20	1	16
17	1	20				EXISTING				EXISTING				20	1	18
19	1	20				EXISTING				EXISTING				20	1	20
21	1	20				EXISTING				EXISTING				20	1	22
23	1	20				EXISTING				EXISTING				20	1	24
25	1	20				EXISTING				EXISTING				30	2	26
27	1	20				EXISTING									/	28
29	1	20				EXISTING				EXISTING				20	1	30
31	1	20				EXISTING				EXISTING				20	1	32
33	1	20				EXISTING				EXISTING				20	1	34
35	1	20				EXISTING				EXISTING				20	1	36
37	1	20	**12**	**12**	**	**ECH-1**	**1.50**	**0.36**		**ROOFTOP RECEPTS**	**	**12**	**12**	20	1	38
39	2	40				EXISTING			**2.25**	**WH-1**	**	**10**	**10**	30	2	40
41	/									**2.25**					/	42
						TOTAL/PHASE	35.79	35.54	2.25							

*** SEE ONE-LINE DIAGRAM**
**** CONDUCTORS SHALL BE IN EMT CONDUIT WHERE SUBJECT TO PHYSICAL DAMAGE. METAL CLAD (MC) CAN BE USED IN CONCELED PLACES AND NOT SUBJECT TO PHYSICAL DAMAGE.**
*****LOCKED BREAKER**

CONNECTED LOAD 73.58 (kVA)
DEMAND LOAD @ 0.80 58.86 (kVA)
DEMAND 163.39 (A)

NEW PANELBOARD SCHEDULE

DESIGNATION: **PP3A** | MAINS: 400A | TYPE: | O.C. DEVICE: M.L.O. | VOLTAGE: 208/120V-3Ø-4W | MIN. AIC RATING: 10,000 | LOCATION: SEE FLOOR PLANS | SUPPLY: MDP-1 | MOUNTING: SURFACE | SINGLE: X | DOUBLE: | TRIPLE:

CKT	POLE	TRIP	WIRE	GND	C	LOAD	KVA Ø A	KVA Ø B	KVA Ø C	LOAD	C	GND	WIRE	TRIP	POLE	CKT
1	2	150	*	*	*	APARTMENT 401	16.74	15.38		APARTMENT 402				150	2	2
3	/							16.06	14.34						/	4
5	2	150	*	*	*	APARTMENT 502			15.92	SPACE						6
7	/						15.60			SPACE						8
9						SPACE				SPACE						10
11						SPACE				SPACE						12
13						SPACE				SPACE						14
15						SPACE				SPACE						16
17						SPACE				SPACE						18
19						SPACE				SPACE						20
21						SPACE				SPACE						22
23						SPACE				SPACE						24
25						SPACE				SPACE						26
27						SPACE				SPACE						28
29						SPACE				SPACE						30
						TOTAL/PHASE	47.72	30.40	15.92							

*** SEE ONE-LINE DIAGRAM**
**** CONDUCTORS SHALL BE IN EMT CONDUIT WHERE SUBJECT TO PHYSICAL DAMAGE. METAL CLAD (MC) CAN BE USED IN CONCELED PLACES AND NOT SUBJECT TO PHYSICAL DAMAGE.**
*****LOCKED BREAKER**

CONNECTED LOAD 94.04 (kVA)
DEMAND LOAD @ 0.80 75.23 (kVA)
DEMAND 208.82 (A)

EXISTING PANELBOARD SCHEDULE

DESIGNATION: **LP4** | MAINS: 100A | TYPE: | O.C. DEVICE: 100A M.C.B. | VOLTAGE: 208/120V-3Ø-4W | MIN. AIC RATING: EXISTING | LOCATION: SEE FLOOR PLANS | SUPPLY: MDP-1 | MOUNTING: SURFACE | SINGLE: X | DOUBLE: | TRIPLE:

CKT	POLE	TRIP	WIRE	GND	C	LOAD	KVA Ø A	KVA Ø B	KVA Ø C	LOAD	C	GND	WIRE	TRIP	POLE	CKT
1	1	20				EXISTING				EXISTING				20	1	2
3	1	20				EXISTING				EXISTING				20	1	4
5	1	20	**12**	**12**	**	**MAINTENANCE AREA LIGHTING**			**0.50**	**0.50**	**CORRIDOR LIGHTING**	**	**12**	**12**	20	1	6
7	**2**	**30**	**10**	**10**	**	**DRYER**	**2.50**	**1.00**			**WASHER**	**	**12**	**12**	20	1	8
9	/							**2.50**	**0.50**		**LAUNDRY LIGHTING**	**	**12**	**12**	20	1	10
11	1	20	**12**	**12**	**	**ELEVATOR STAIRWELL LIGHTING**			**0.50**	**0.50**	**NORTH STAIRWELL LIGHTING**	**	**12**	**12**	20	1	12
13	1	20	**12**	**12**	**	**SOUTH STAIRWELL LIGHTING**	**0.50**	**0.18**			**LAUNDRY RECEPTS**	**	**12**	**12**	20	1	14
15	1	20				EXISTING				EXISTING				20	1	16
17	1	20				EXISTING				EXISTING				20	1	18
19	1	20				EXISTING				EXISTING				50	2	20
21	1	20				EXISTING									/	22
23	1	20				EXISTING				EXISTING				20	1	24
25	2	50				EXISTING				EXISTING				20	1	26
27	/									EXISTING				20	1	28
29						SPACE				SPACE						30
						TOTAL/PHASE	4.18	3.00	2.00							

*** SEE ONE-LINE DIAGRAM**
**** CONDUCTORS SHALL BE IN EMT CONDUIT WHERE SUBJECT TO PHYSICAL DAMAGE. METAL CLAD (MC) CAN BE USED IN CONCELED PLACES AND NOT SUBJECT TO PHYSICAL DAMAGE.**
*****LOCKED BREAKER**

CONNECTED LOAD 9.18 (kVA)
DEMAND LOAD @ 0.80 7.34 (kVA)
DEMAND 20.38 (A)

EXISTING PANELBOARD SCHEDULE

DESIGNATION: **PP4** | MAINS: 100A | TYPE: | O.C. DEVICE: 100A M.C.B. | VOLTAGE: 208/120V-3Ø-4W | MIN. AIC RATING: EXISTING | LOCATION: SEE FLOOR PLANS | SUPPLY: MDP-1 | MOUNTING: SURFACE | SINGLE: X | DOUBLE: | TRIPLE:

CKT	POLE	TRIP	WIRE	GND	C	LOAD	KVA Ø A	KVA Ø B	KVA Ø C	LOAD	C	GND	WIRE	TRIP	POLE	CKT
1	1	20				EXISTING				EXISTING				20	1	2
3	1	20				EXISTING				EXISTING				20	1	4
5	1	20				EXISTING				EXISTING				20	1	6
7	1	20				EXISTING				EXISTING				20	1	8
9	1	20				EXISTING				EXISTING				20	1	10
11	1	20				EXISTING				EXISTING				20	1	12
13	1	20				EXISTING				EXISTING				20	1	14
15	1	20				EXISTING				EXISTING				20	1	16
17	1	20				EXISTING				EXISTING				20	1	18
19	**2**	**20**				**EUH-1**	**1.25**			EXISTING				20	1	20
21	/							**1.25**	**2.40**	**ERV-1**	**	**10**	**10**	**25**	**1**	22
23	**1**	**20**	**12**	**12**	**	**ECH-2**			**0.50**	**2.25**	**WH-1**	**	**10**	**10**	**30**	**2**	24
25	1	20	**12**	**12**	**	**ECH-2**	**0.50**	**2.25**							/	26
27	**1**	**20**	**12**	**12**	**	**ECH-1**		**1.50**	**1.50**	**ECH-1**	**	**12**	**12**	**20**	**1**	28
29						SPACE			**0.72**	**ROOFTOP RECEPTS**	**	**12**	**12**	**20**	**1**	30
						TOTAL/PHASE	4.00	6.65	3.47							

*** SEE ONE-LINE DIAGRAM**
**** CONDUCTORS SHALL BE IN EMT CONDUIT WHERE SUBJECT TO PHYSICAL DAMAGE. METAL CLAD (MC) CAN BE USED IN CONCELED PLACES AND NOT SUBJECT TO PHYSICAL DAMAGE.**
*****LOCKED BREAKER**

CONNECTED LOAD 14.12 (kVA)
DEMAND LOAD @ 0.80 11.30 (kVA)
DEMAND 31.35 (A)

NEW PANELBOARD SCHEDULE

DESIGNATION: **PP4A** | MAINS: 200A | TYPE: | O.C. DEVICE: M.L.O. | VOLTAGE: 208/120V-3Ø-4W | MIN. AIC RATING: 10,000 | LOCATION: SEE FLOOR PLANS | SUPPLY: MDP-1 | MOUNTING: SURFACE | SINGLE: X | DOUBLE: | TRIPLE:

CKT	POLE	TRIP	WIRE	GND	C	LOAD	KVA Ø A	KVA Ø B	KVA Ø C	LOAD	C	GND	WIRE	TRIP	POLE	CKT
1	2	150	*	*	*	APARTMENT 603	15.02	14.84		APARTMENT 604				150	2	2
3	/								15.96	15.42					/	4
5						SPACE				SPACE						6
7						SPACE				SPACE						8
9						SPACE				SPACE						10
11						SPACE				SPACE						12
13						SPACE				SPACE						14
15						SPACE				SPACE						16
17						SPACE				SPACE						18
19						SPACE				SPACE						20
21						SPACE				SPACE						22
23						SPACE				SPACE						24
25						SPACE				SPACE						26
27						SPACE				SPACE						28
29						SPACE				SPACE						30
						TOTAL/PHASE	29.86	31.38	0.00							

*** SEE ONE-LINE DIAGRAM**
**** CONDUCTORS SHALL BE IN EMT CONDUIT WHERE SUBJECT TO PHYSICAL DAMAGE. METAL CLAD (MC) CAN BE USED IN CONCELED PLACES AND NOT SUBJECT TO PHYSICAL DAMAGE.**
*****LOCKED BREAKER**

CONNECTED LOAD 61.24 (kVA)
DEMAND LOAD @ 0.80 48.99 (kVA)
DEMAND 135.99 (A)

PHASE BALANCE NOTE:
COORDINATE NEW BREAKER LOCATIONS TO BALANCE LOAD OVER EACH PHASE.

Client:
16-22 Union Street - Apartment Building
Client: Empire Property Construction
16-22 Union St.
Wilkes-Barre, Pa 18701

Consultants:
DMG design management group
consulting engineers
570 299 7520
dmgeng.com

CAM architect
CAM architect, LLC
ARCHITECTS | PLANNERS
606 North Main St. Wilkes-Barre, PA 18705
T | 570| 824.3320
F | 570| 606.4966
www.camarchus.com
© 2026 CAM ARCHITECT

Seals:
PRELIMINARY - NOT FOR CONSTRUCTION
THIS DOCUMENT IS FURNISHED TO OTHERS FOR INFORMATION PURPOSES ONLY AND NOT INTENDED FOR CONSTRUCTION, BIDDING, OR NEGOTIATION. ARCHITECT OF CONSTRUCTION DOCUMENTS FROM THE ARCHITECT OF CONSTRUCTION DOCUMENTS FROM THE ARCHITECT

Revisions | Issues
No: Date:

Phase:
PERMIT/PRICING

Project: Apartment Building
Date: 06/15/2026
Drawn: DP Checked: KJS
Scale: AS NOTED
Sheet:
PANELBOARD SCHEDULES
E-10

EXISTING SWITCHBOARD SCHEDULE

DESIGNATION:	MAINS: 1,200A	VOLTAGE: 208/120V-3ø-4W	LOCATION: SEE FLOOR PLANS	SINGLE: X
MDP-2	TYPE:	MIN. AIC RATING: 100,000	SUPPLY: UTILITY VIA DISC.	DOUBLE:
	O.C. DEVICE: 1,200 M.C.B.		MOUNTING: SURFACE	TRIPLE:

CKT	POLE	TRIP	WIRE	GND	C	LOAD	KVA Ø A		KVA Ø B		KVA Ø C		LOAD	C	GND	WIRE	TRIP	POLE	CKT
	/																	/	
1	3	60				SPARE							SPARE				50	3	2
	/																	/	
	/																	/	
3	3	125				SPARE							SPARE				80	3	4
	/																	/	
	/																	/	
5	3	125				SPARE							SPARE				100	3	6
	/																	/	
	/																	/	
7	3	175				SPARE							SPARE				100	3	8
	/																	/	
	/						**17.82**						**APARTMENT 302**	*	*	*	**150**	**2**	**10**
9	3	175				SPARE			**16.24**									/	
	/											**17.82**	**APARTMENT 304**	*	*	*	**150**	**2**	**10**
	/						**35.04**	**15.42**										/	
11	3	225	E	E	E	PANEL LP2			**35.02**	**15.02**			**APARTMENT 305**	*	*	*	**150**	**2**	**10**
	/										**2.00**	**15.60**						/	
	/						**33.14**	**18.00**					**APARTMENT 306**	*	*	*	**150**	**2**	**10**
13	3	225	E	E	E	PANEL PP1			**37.45**	**17.14**								/	
	/										**5.25**	**17.41**	**APARTMENT 504**	*	*	*	**150**	**2**	**10**
	/						**36.76**	**17.27**										/	
15	3	225	E	E	E	PANEL LP1			**38.34**	**16.87**			**APARTMENT 506**	*	*	*	**150**	**2**	**10**
	/										**4.50**	**16.91**						/	
						TOTAL/PHASE	119.42		120.87		58.08								

*** SEE ONE-LINE DIAGRAM**
**** CONDUCTORS SHALL BE IN EMT CONDUIT WHERE SUBJECT TO PHYSICAL DAMAGE. METAL CLAD (MC) CAN BE USED IN CONCELED PLACES AND NOT SUBJECT TO PHYSICAL DAMAGE.**
*****LOCKED BREAKER**

CONNECTED LOAD	298.37	**(kVA)**
DEMAND LOAD @ 0.80	238.70	**(kVA)**
DEMAND	662.55	**(A)**

EXISTING PANELBOARD SCHEDULE

DESIGNATION:	MAINS: 225A	VOLTAGE: 208/120V-3ø-4W	LOCATION: SEE FLOOR PLANS	SINGLE: X
LP1	TYPE:	MIN. AIC RATING: EXISTING	SUPPLY: MDP-2	DOUBLE:
	O.C. DEVICE: 225A M.C.B.		MOUNTING: SURFACE	TRIPLE:

1	POLE	TRIP	WIRE	GND	C	LOAD	KVA Ø A		KVA Ø B		KVA Ø C		LOAD	C	GND	WIRE	TRIP	POLE	CKT
1	**2**	**150**	*	*	*	**APARTMENT 105**	**15.84**	**16.74**					**APARTMENT 106**	*	*	*	**150**	**2**	2
3	/								**16.78**	**16.06**								/	4
5	1	20	**12**	**12**	**	**MAINTENANCE AREA LIGHTING**					**0.50**	**0.50**	**CORRIDOR LIGHTING**	**	**12**	**12**	20	1	6
7	**2**	**30**	**10**	**10**	**	**DRYER**	**2.50**	**1.00**					**WASHER**	**	**12**	**12**	20	1	8
9	/								**2.50**	**0.50**			**LAUNDRY LIGHTING**	**	**12**	**12**	20	1	10
11	1	20	**12**	**12**	**	**ELEVATOR STAIRWELL LIGHTING**					**0.50**	**0.50**	**NORTH STAIRAWELL LIGHTING**	**	**12**	**12**	20	1	12
13	1	20	**12**	**12**	**	**SOUTH STAIRWELL LIGHTING**	**0.50**	**0.18**					**LAUNDRY RECEPTS**	**	**12**	**12**	20	1	14
15	1	20				EXISTING							EXISTING				20	1	16
17	1	20				EXISTING							EXISTING				20	1	18
19	1	20				EXISTING							EXISTING				20	1	20
21	1	20				EXISTING							SPACE						22
23	1	20				EXISTING							EXISTING				100	2	24
25	1	20				EXISTING												/	26
27	1	20				EXISTING							SPACE						28
29						SPACE							EXISTING				30	2	30
31	1	20																/	32
33						SPACE							EXISTING				40	2	34
35	2	50				EXISTING												/	36
37	/																15	1	38
39	**2**	**20**	**12**	**12**	**	**EUH-1**			**1.25**	**1.25**			**EUH-1**	**	**12**	**12**	**20**	**2**	40
41	/										**1.25**	1.25						/	42
						TOTAL/PHASE	36.76		38.34		4.50								

*** SEE ONE-LINE DIAGRAM**
**** CONDUCTORS SHALL BE IN EMT CONDUIT WHERE SUBJECT TO PHYSICAL DAMAGE. METAL CLAD (MC) CAN BE USED IN CONCELED PLACES AND NOT SUBJECT TO PHYSICAL DAMAGE.**
*****LOCKED BREAKER**

CONNECTED LOAD	79.60	**(kVA)**
DEMAND LOAD @ 0.80	63.68	**(kVA)**
DEMAND	176.76	**(A)**

EXISTING PANELBOARD SCHEDULE

DESIGNATION:	MAINS: 225A	VOLTAGE: 208/120V-3ø-4W	LOCATION: SEE FLOOR PLANS	SINGLE: X
PP1	TYPE:	MIN. AIC RATING: EXISTING	SUPPLY: MDP-2	DOUBLE:
	O.C. DEVICE: 225A M.C.B.		MOUNTING: SURFACE	TRIPLE:

CKT	POLE	TRIP	WIRE	GND	C	LOAD	KVA Ø A		KVA Ø B		KVA Ø C		LOAD	C	GND	WIRE	TRIP	POLE	CKT
1	**2**	**150**	*	*	*	**APARTMENT 102**	**15.84**	**14.30**					**APARTMENT 104**	*	*	*	**150**	**2**	2
3	/								**16.78**	**15.42**								/	4
5	1	20				EXISTING							EXISTING				20	1	6
7	1	20				EXISTING							EXISTING				20	1	8
9	1	20				EXISTING							EXISTING				20	1	10
11	1	20				EXISTING							EXISTING				20	1	12
13	1	20				EXISTING							EXISTING				20	1	14
15	1	20				EXISTING							EXISTING				20	1	16
17	1	20				EXISTING							EXISTING				20	1	18
19	1	20				EXISTING							EXISTING				20	1	20
21	1	20				EXISTING							EXISTING				20	1	22
23	1	20				EXISTING							EXISTING				20	1	24
25	1	20				EXISTING							EXISTING				20	1	26
27	1	20				EXISTING							EXISTING				20	1	28
29	1	20				EXISTING					**0.50**		**FACP**	**	**12**	**12**	20	**1***	30
31	1	20				EXISTING							SPACE						32
33						SPACE			**2.25**				WH-1	**	10	10	30	2	34
35						SPACE					**2.25**							/	36
37	1	20	**12**	**12**	**	**ECH-1**	**1.50**	**1.50**					**ECH-1**	**	**12**	**12**	20	1	38
39	1	20	**12**	**12**	**	**ECH-1**			**1.50**	**1.50**			**ECH-1**	**	**12**	**12**	20	1	40
41	1	20	**12**	**12**	**	**ECH-1**					**1.50**	**1.50**	**ECH-1**	**	**12**	**12**	20	1	42
						TOTAL/PHASE	33.14		37.45		5.75								

*** SEE ONE-LINE DIAGRAM**
**** CONDUCTORS SHALL BE IN EMT CONDUIT WHERE SUBJECT TO PHYSICAL DAMAGE. METAL CLAD (MC) CAN BE USED IN CONCELED PLACES AND NOT SUBJECT TO PHYSICAL DAMAGE.**
*****LOCKED BREAKER**

CONNECTED LOAD	76.34	**(kVA)**
DEMAND LOAD @ 0.80	61.07	**(kVA)**
DEMAND	169.52	**(A)**

NEW PANELBOARD SCHEDULE

DESIGNATION:	MAINS: 400A	VOLTAGE: 208/120V-3ø-4W	LOCATION: SEE FLOOR PLANS	SINGLE: X
PP1A	TYPE:	MIN. AIC RATING: 10,000	SUPPLY: MDP-2	DOUBLE:
	O.C. DEVICE: M.L.O.		MOUNTING: SURFACE	TRIPLE:

CKT	POLE	TRIP	WIRE	GND	C	LOAD	KVA Ø A		KVA Ø B		KVA Ø C		LOAD	C	GND	WIRE	TRIP	POLE	CKT
1	2	150	*	*	*	APARTMENT 101	16.92	16.74					APARTMENT 103	*	*	*	150	2	2
3	/								16.42	16.42								/	4
5	2	150	*	*	*	LEASING OFFICE [APT]					18.27		SPACE						6
7	/						17.59						SPACE						8
9						SPACE							SPACE						10
11						SPACE							SPACE						12
13						SPACE							SPACE						14
15						SPACE							SPACE						16
17						SPACE							SPACE						18
19						SPACE							SPACE						20
21						SPACE							SPACE						22
23						SPACE							SPACE						24
25						SPACE							SPACE						26
27						SPACE							SPACE						28
29						SPACE							SPACE						30
						TOTAL/PHASE	51.25		32.84		18.27								

*** SEE ONE-LINE DIAGRAM**
**** CONDUCTORS SHALL BE IN EMT CONDUIT WHERE SUBJECT TO PHYSICAL DAMAGE. METAL CLAD (MC) CAN BE USED IN CONCELED PLACES AND NOT SUBJECT TO PHYSICAL DAMAGE.**
*****LOCKED BREAKER**

CONNECTED LOAD	102.36	**(kVA)**
DEMAND LOAD @ 0.80	81.89	**(kVA)**
DEMAND	227.30	**(A)**

NEW PANELBOARD SCHEDULE

DESIGNATION:	MAINS: 400A	VOLTAGE: 208/120V-3ø-4W	LOCATION: SEE FLOOR PLANS	SINGLE: X
PP1B	TYPE:	MIN. AIC RATING: 10,000	SUPPLY: MDP-2	DOUBLE:
	O.C. DEVICE: M.L.O.		MOUNTING: SURFACE	TRIPLE:

CKT	POLE	TRIP	WIRE	GND	C	LOAD	KVA Ø A		KVA Ø B		KVA Ø C		LOAD	C	GND	WIRE	TRIP	POLE	CKT
1	2	150	*	*	*	APARTMENT 107	15.66	15.84					APARTMENT 108	*	*	*	150	2	2
3	/								15.70	14.98								/	4
5	2	150	*	*	*	APARTMENT 109					15.48	15.48	APARTMENT 110	*	*	*	150	2	6
7	/						15.70	15.70										/	8
9						SPACE							SPACE						10
11						SPACE							SPACE						12
13						SPACE							SPACE						14
15						SPACE							SPACE						16
17						SPACE							SPACE						18
19						SPACE							SPACE						20
21						SPACE							SPACE						22
23						SPACE							SPACE						24
25						SPACE							SPACE						26
27						SPACE							SPACE						28
29						SPACE							SPACE						30
						TOTAL/PHASE	62.90		30.68		30.96								

*** SEE ONE-LINE DIAGRAM**
**** CONDUCTORS SHALL BE IN EMT CONDUIT WHERE SUBJECT TO PHYSICAL DAMAGE. METAL CLAD (MC) CAN BE USED IN CONCELED PLACES AND NOT SUBJECT TO PHYSICAL DAMAGE.**
*****LOCKED BREAKER**

CONNECTED LOAD	124.54	**(kVA)**
DEMAND LOAD @ 0.80	99.63	**(kVA)**
DEMAND	276.55	**(A)**

EXISTING PANELBOARD SCHEDULE

DESIGNATION:	MAINS: 225A	VOLTAGE: 208/120V-3ø-4W	LOCATION: SEE FLOOR PLANS	SINGLE: X
LP2	TYPE:	MIN. AIC RATING: EXISTING	SUPPLY: MDP-2	DOUBLE:
	O.C. DEVICE: 225A M.C.B.		MOUNTING: SURFACE	TRIPLE:

CKT	POLE	TRIP	WIRE	GND	C	LOAD	KVA Ø A		KVA Ø B		KVA Ø C		LOAD	C	GND	WIRE	TRIP	POLE	CKT
1	**2**	**150**	*	*	*	**APARTMENT 201**	**15.84**	**15.02**					**APARTMENT 202**	*	*	*	**150**	**2**	2
3	/								**16.42**	**15.60**								/	4
5	1	20	**12**	**12**	**	**MAINTENANCE AREA LIGHTING**					0.50	0.50	**CORRIDOR LIGHTING**	**	**12**	**12**	20	1	6
7	**2**	**30**	**10**	**10**	**	**DRYER**	2.50	1.00					**WASHER**	**	**12**	**12**	20	1	8
9	/								2.50	0.50			**LAUNDRY LIGHTING**	**	**12**	**12**	20	1	10
11	1	20	**12**	**12**	**	**ELEVATOR STAIRWELL LIGHTING**					0.50	0.50	**NORTH STAIRAWELL LIGHTING**	**	**12**	**12**	20	1	12
13	1	20	**12**	**12**	**	**SOUTH STAIRWELL LIGHTING**	0.50	0.18					**LAUNDRY RECEPTS**	**	**12**	**12**	20	1	14
15	1	20				EXISTING							EXISTING				20	1	16
17	2	30				EXISTING							EXISTING				20	1	18
19	/												EXISTING				20	1	20
21	1	20				EXISTING							EXISTING				20	1	22
23	2					EXISTING							EXISTING				20	1	24
25	/												EXISTING				20	1	26
27	2	50				EXISTING							EXISTING				20	1	28
29	/												EXISTING				20	1	30
31	1	20				EXISTING							EXISTING				20	1	32
33	2	30				EXISTING							EXISTING				20	1	34
35	/												EXISTING				50	2	36
37	1	20				EXISTING												/	38
39	1	20				EXISTING							EXISTING				20	1	40
41	1	20				EXISTING							EXISTING				15	1	42
						TOTAL/PHASE	35.04		35.02		2.00								

*** SEE ONE-LINE DIAGRAM**
**** CONDUCTORS SHALL BE IN EMT CONDUIT WHERE SUBJECT TO PHYSICAL DAMAGE. METAL CLAD (MC) CAN BE USED IN CONCELED PLACES AND NOT SUBJECT TO PHYSICAL DAMAGE.**
*****LOCKED BREAKER**

CONNECTED LOAD	72.06	**(kVA)**
DEMAND LOAD @ 0.80	57.65	**(kVA)**
DEMAND	160.01	**(A)**

PHASE BALANCE NOTE:
COORDINATE NEW BREAKER LOCATIONS TO BALANCE LOAD OVER EACH PHASE.

Client:
16-22 Union Street - Apartment Building
Client: Empire Property Construction
16-22 Union St.
Wilkes-Barre, Pa 18701

Consultants:
DMG
design management group
consulting engineers
570 299 7520
dmgeng.com

CAM architect
CAM architect, LLC
ARCHITECTS | PLANNERS
606 North Main St. Wilkes-Barre, PA 18705
T | 570| 824.3300
F | 570| 606.4966
www.camarchus.com

© 2026 CAM ARCHITECT

Seals:
PRELIMINARY - NOT FOR CONSTRUCTION
THIS DOCUMENT IS PRELIMINARY IN NATURE AND IS INCOMPLETE. IT IS PROVIDED FOR INFORMATION PURPOSES ONLY. ALTHOUGH THE DRAWINGS, SPECIFICATIONS, OR ANY OTHER DOCUMENTS MAY BE SEALED, THEY ARE NOT INTENDED FOR CONSTRUCTION AND MAY NOT BE USED FOR CONSTRUCTION WITHOUT THE EXPRESS WRITTEN CONSENT OF THE ARCHITECT.

Revisions | Issues
No: Date:

Phase:
PERMIT/PRICING

Project: Apartment Building
Date: 06/15/2026
Drawn: DP Checked: KJS
Scale: AS NOTED
Sheet:
PANELBOARD SCHEDULES

E-11

TYPICAL LOAD CENTER SCHEDULE

Designation: **101**
MAINS: 150A | TYPE: 1 | O.C. DEVICE: M.L.O.
VOLTAGE: 120/208-1Ø-3W | MIN. AIC RATING: 10,000
LOCATION: SEE PLANS | SUPPLY: SEE ONE-LINE | MOUNTING: RECESSED
Single: x | Double:

CKT	POLE	TRIP	WIRE	GND	C	LOAD	KVA Ø A	KVA Ø B	LOAD	C	GND	WIRE	TRIP	POLE	CKT
1	1	20	12	12	**	REFRIGERATOR	1.00	0.18	COUNTERTOP RECEPTACLES	**	12	12	20	1	2
3	1	20	12	12	**	COUNTERTOP RECEPTACLES		0.18	4.00 RANGE	**	10	8	50	2	4
5	1	20	12	12	**	BATHROOM GFI	0.18	4.00						/	6
7	1	20	12	12	**	MICROWAVE		1.00	1.08 BEDROOM RECEPTACLES	**	12	12	20	1	8
9	1	20	12	12	**	BEDROOM RECEPTACLES	1.08	1.20	DISHWASHER	**	12	12	20	1	10
11	1	20	12	12	**	RECEPTACLES		1.26	1.20				20	1	12
13	1	20	12	12	**	RECEPTACLES	1.08		SPACE						14
15						SPACE			SPACE						16
17						SPACE			SPACE						18
19	2	45	8	10	**	AH-B HEAT		3.60	SPACE						20
21	/						3.60		SPACE						22
23	2	15	14	14	**	AH-B HEAT		0.50	SPACE						24
25	/						0.50	2.25	WH-1	**	10	10	30	2	26
27	2	20	12	12	**	HP-B		1.35	2.25					/	28
29	/						1.35	0.50	LIGHTING	**	14	14	15	1	30

TOTAL/PHASE 16.92 | 16.42

CONNECTED LOAD 33.34 (kVA)
DEMAND LOAD @ 0.80 26.67 (kVA)
DEMAND 128.23 (A)

*** PROVIDE LOCKED BREAKER**
**** METAL CLAD (MC) OR CONDUCTORS IN CONDUIT SHALL BE USED WHERE SUBJECT TO PHYSICAL DAMAGE. NON-METALLIC (NM) CAN BE USED IN CONCELED PLACES AND NOT SUBJECT TO PHYSICAL DAMAGE.**

ALL 120V-1Ø CIRCUITS SHALL BE AFCI-PROTECTED PER NEC ARTICLE 210.12. PROVIDE AFCI PROTECTION AT THE CIRCUIT BREAKER LEVEL. ALL 120V-1Ø, 15- AND 20-AMPERE BRANCH CIRCUITS SUPPLYING OUTLETS OR DEVICES INSTALLED IN DWELLING UNIT KITCHENS, FAMILY ROOMS, DINING ROOMS, LIVING ROOMS, PARLORS, LIBRARIES, DENS, BEDROOMS, SUNROOMS, RECREATION ROOMS, CLOSETS, HALLWAYS, LAUNDRY AREAS, OR SIMILAR ROOMS OR AREAS SHALL BE PROTECTED BY A LISTED COMBINATION AFCI BREAKER.

TYPICAL LOAD CENTER SCHEDULE

Designation: **102**
MAINS: 150A | TYPE: 1 | O.C. DEVICE: M.L.O.
VOLTAGE: 120/208-1Ø-3W | MIN. AIC RATING: 10,000
LOCATION: SEE PLANS | SUPPLY: SEE ONE-LINE | MOUNTING: RECESSED
Single: x | Double:

CKT	POLE	TRIP	WIRE	GND	C	LOAD	KVA Ø A	KVA Ø B	LOAD	C	GND	WIRE	TRIP	POLE	CKT
1	1	20	12	12	**	REFRIGERATOR	1.00	0.18	COUNTERTOP RECEPTACLES	**	12	12	20	1	2
3	1	20	12	12	**	COUNTERTOP RECEPTACLES		0.18	4.00 RANGE	**	10	8	50	2	4
5	1	20	12	12	**	BATHROOM GFI	0.18	4.00						/	6
7	1	20	12	12	**	MICROWAVE		1.00	1.44 BEDROOM RECEPTACLES	**	12	12	20	1	8
9	1	20	12	12	**	BEDROOM RECEPTACLES	1.08	1.20	DISHWASHER	**	12	12	20	1	10
11	1	20	12	12	**	RECEPTACLES		1.26	1.20				20	1	12
13						SPACE			SPACE						14
15						SPACE			SPACE						16
17						SPACE			SPACE						18
19	2	45	8	10	**	AH-B HEAT		3.60	SPACE						20
21	/						3.60		SPACE						22
23	2	30	10	10	**	AH-B		0.50	SPACE						24
25	/						0.50	2.25	WH-1	**	10	10	30	2	26
27	2	20	12	12	**	HP-B		1.35	2.25					/	28
29	/						1.35	0.50	LIGHTING	**	14	14	15	1	30

TOTAL/PHASE 15.84 | 16.78

CONNECTED LOAD 32.62 (kVA)
DEMAND LOAD @ 0.80 26.10 (kVA)
DEMAND 125.46 (A)

*** PROVIDE LOCKED BREAKER**
**** METAL CLAD (MC) OR CONDUCTORS IN CONDUIT SHALL BE USED WHERE SUBJECT TO PHYSICAL DAMAGE. NON-METALLIC (NM) CAN BE USED IN CONCELED PLACES AND NOT SUBJECT TO PHYSICAL DAMAGE.**

ALL 120V-1Ø CIRCUITS SHALL BE AFCI-PROTECTED PER NEC ARTICLE 210.12. PROVIDE AFCI PROTECTION AT THE CIRCUIT BREAKER LEVEL. ALL 120V-1Ø, 15- AND 20-AMPERE BRANCH CIRCUITS SUPPLYING OUTLETS OR DEVICES INSTALLED IN DWELLING UNIT KITCHENS, FAMILY ROOMS, DINING ROOMS, LIVING ROOMS, PARLORS, LIBRARIES, DENS, BEDROOMS, SUNROOMS, RECREATION ROOMS, CLOSETS, HALLWAYS, LAUNDRY AREAS, OR SIMILAR ROOMS OR AREAS SHALL BE PROTECTED BY A LISTED COMBINATION AFCI BREAKER.

TYPICAL LOAD CENTER SCHEDULE

Designation: **103**
MAINS: 150A | TYPE: 1 | O.C. DEVICE: M.L.O.
VOLTAGE: 120/208-1Ø-3W | MIN. AIC RATING: 10,000
LOCATION: SEE PLANS | SUPPLY: SEE ONE-LINE | MOUNTING: RECESSED
Single: x | Double:

CKT	POLE	TRIP	WIRE	GND	C	LOAD	KVA Ø A	KVA Ø B	LOAD	C	GND	WIRE	TRIP	POLE	CKT
1	1	20	12	12	**	REFRIGERATOR	1.00	0.18	COUNTERTOP RECEPTACLES	**	12	12	20	1	2
3	1	20	12	12	**	COUNTERTOP RECEPTACLES		0.18	4.00 RANGE	**	10	8	50	2	4
5	1	20	12	12	**	BATHROOM GFI	0.18	4.00						/	6
7	1	20	12	12	**	MICROWAVE		1.00	1.08 BEDROOM RECEPTACLES	**	12	12	20	1	8
9	1	20	12	12	**	BEDROOM RECEPTACLES	1.08	1.20	DISHWASHER	**	12	12	20	1	10
11	1	20	12	12	**	RECEPTACLES		1.26	1.20				20	1	12
13	1	20	12	12	**	RECEPTACLES	0.90		SPACE						14
15						SPACE			SPACE						16
17						SPACE			SPACE						18
19	2	45	8	10	**	AH-B HEAT		3.60	SPACE						20
21	/						3.60		SPACE						22
23	2	15	14	14	**	AH-B		0.50	SPACE						24
25	/						0.50	2.25	WH-1	**	10	10	30	2	26
27	2	20	12	12	**	HP-B		1.35	2.25					/	28
29	/						1.35	0.50	LIGHTING	**	14	14	15	1	30

TOTAL/PHASE 16.74 | 16.42

CONNECTED LOAD 33.16 (kVA)
DEMAND LOAD @ 0.80 26.53 (kVA)
DEMAND 127.54 (A)

*** PROVIDE LOCKED BREAKER**
**** METAL CLAD (MC) OR CONDUCTORS IN CONDUIT SHALL BE USED WHERE SUBJECT TO PHYSICAL DAMAGE. NON-METALLIC (NM) CAN BE USED IN CONCELED PLACES AND NOT SUBJECT TO PHYSICAL DAMAGE.**

ALL 120V-1Ø CIRCUITS SHALL BE AFCI-PROTECTED PER NEC ARTICLE 210.12. PROVIDE AFCI PROTECTION AT THE CIRCUIT BREAKER LEVEL. ALL 120V-1Ø, 15- AND 20-AMPERE BRANCH CIRCUITS SUPPLYING OUTLETS OR DEVICES INSTALLED IN DWELLING UNIT KITCHENS, FAMILY ROOMS, DINING ROOMS, LIVING ROOMS, PARLORS, LIBRARIES, DENS, BEDROOMS, SUNROOMS, RECREATION ROOMS, CLOSETS, HALLWAYS, LAUNDRY AREAS, OR SIMILAR ROOMS OR AREAS SHALL BE PROTECTED BY A LISTED COMBINATION AFCI BREAKER.

TYPICAL LOAD CENTER SCHEDULE

Designation: **104**
MAINS: 150A | TYPE: 1 | O.C. DEVICE: M.L.O.
VOLTAGE: 120/208-1Ø-3W | MIN. AIC RATING: 10,000
LOCATION: SEE PLANS | SUPPLY: SEE ONE-LINE | MOUNTING: RECESSED
Single: x | Double:

CKT	POLE	TRIP	WIRE	GND	C	LOAD	KVA Ø A	KVA Ø B	LOAD	C	GND	WIRE	TRIP	POLE	CKT
1	1	20	12	12	**	REFRIGERATOR	1.00	0.18	COUNTERTOP RECEPTACLES	**	12	12	20	1	2
3	1	20	12	12	**	COUNTERTOP RECEPTACLES		0.18	4.00 RANGE	**	10	8	50	2	4
5	1	20	12	12	**	BATHROOM GFI	0.18	4.00						/	6
7	1	20	12	12	**	MICROWAVE		1.00	1.08 BEDROOM RECEPTACLES	**	12	12	20	1	8
9	1	20	12	12	**	RECEPTACLES	0.36	1.20	DISHWASHER	**	12	12	20	1	10
11	1	20	12	12	**	RECEPTACLES		1.08	1.20				20	1	12
13						SPACE			SPACE						14
15						SPACE			SPACE						16
17						SPACE			SPACE						18
19	2	40	8	10	**	AH-A HEAT		2.88	SPACE						20
21	/						2.88		SPACE						22
23	2	15	14	14	**	AH-A		0.50	SPACE						24
25	/						0.50	2.25	WH-1	**	10	10	30	2	26
27	2	20	12	12	**	HP-A		1.25	2.25					/	28
29	/						1.25	0.50	LIGHTING	**	14	14	15	1	30

TOTAL/PHASE 14.30 | 15.42

CONNECTED LOAD 29.72 (kVA)
DEMAND LOAD @ 0.80 23.78 (kVA)
DEMAND 114.31 (A)

*** PROVIDE LOCKED BREAKER**
**** METAL CLAD (MC) OR CONDUCTORS IN CONDUIT SHALL BE USED WHERE SUBJECT TO PHYSICAL DAMAGE. NON-METALLIC (NM) CAN BE USED IN CONCELED PLACES AND NOT SUBJECT TO PHYSICAL DAMAGE.**

ALL 120V-1Ø CIRCUITS SHALL BE AFCI-PROTECTED PER NEC ARTICLE 210.12. PROVIDE AFCI PROTECTION AT THE CIRCUIT BREAKER LEVEL. ALL 120V-1Ø, 15- AND 20-AMPERE BRANCH CIRCUITS SUPPLYING OUTLETS OR DEVICES INSTALLED IN DWELLING UNIT KITCHENS, FAMILY ROOMS, DINING ROOMS, LIVING ROOMS, PARLORS, LIBRARIES, DENS, BEDROOMS, SUNROOMS, RECREATION ROOMS, CLOSETS, HALLWAYS, LAUNDRY AREAS, OR SIMILAR ROOMS OR AREAS SHALL BE PROTECTED BY A LISTED COMBINATION AFCI BREAKER.

TYPICAL LOAD CENTER SCHEDULE

Designation: **105**
MAINS: 150A | TYPE: 1 | O.C. DEVICE: M.L.O.
VOLTAGE: 120/208-1Ø-3W | MIN. AIC RATING: 10,000
LOCATION: SEE PLANS | SUPPLY: SEE ONE-LINE | MOUNTING: RECESSED
Single: x | Double:

CKT	POLE	TRIP	WIRE	GND	C	LOAD	KVA Ø A	KVA Ø B	LOAD	C	GND	WIRE	TRIP	POLE	CKT
1	1	20	12	12	**	REFRIGERATOR	1.00	0.18	COUNTERTOP RECEPTACLES	**	12	12	20	1	2
3	1	20	12	12	**	COUNTERTOP RECEPTACLES		0.18	4.00 RANGE	**	10	8	50	2	4
5	1	20	12	12	**	BATHROOM GFI	0.18	4.00						/	6
7	1	20	12	12	**	MICROWAVE		1.00	1.08 BEDROOM RECEPTACLES	**	12	12	20	1	8
9	1	20	12	12	**	BEDROOM RECEPTACLES	1.08	1.20	DISHWASHER	**	12	12	20	1	10
11	1	20	12	12	**	RECEPTACLES		1.62	1.20				20	1	12
13						SPACE			SPACE						14
15						SPACE			SPACE						16
17						SPACE			SPACE						18
19	2	45	8	10	**	AH-C HEAT		3.60	SPACE						20
21	/						3.60		SPACE						22
23	2	15	14	14	**	AH-C		0.50	SPACE						24
25	/						0.50	2.25	WH-1	**	10	10	30	2	26
27	2	20	12	12	**	HP-B		1.35	2.25					/	28
29	/						1.35	0.50	LIGHTING	**	14	14	15	1	30

TOTAL/PHASE 15.84 | 16.78

CONNECTED LOAD 32.62 (kVA)
DEMAND LOAD @ 0.80 26.10 (kVA)
DEMAND 125.46 (A)

*** PROVIDE LOCKED BREAKER**
**** METAL CLAD (MC) OR CONDUCTORS IN CONDUIT SHALL BE USED WHERE SUBJECT TO PHYSICAL DAMAGE. NON-METALLIC (NM) CAN BE USED IN CONCELED PLACES AND NOT SUBJECT TO PHYSICAL DAMAGE.**

ALL 120V-1Ø CIRCUITS SHALL BE AFCI-PROTECTED PER NEC ARTICLE 210.12. PROVIDE AFCI PROTECTION AT THE CIRCUIT BREAKER LEVEL. ALL 120V-1Ø, 15- AND 20-AMPERE BRANCH CIRCUITS SUPPLYING OUTLETS OR DEVICES INSTALLED IN DWELLING UNIT KITCHENS, FAMILY ROOMS, DINING ROOMS, LIVING ROOMS, PARLORS, LIBRARIES, DENS, BEDROOMS, SUNROOMS, RECREATION ROOMS, CLOSETS, HALLWAYS, LAUNDRY AREAS, OR SIMILAR ROOMS OR AREAS SHALL BE PROTECTED BY A LISTED COMBINATION AFCI BREAKER.

TYPICAL LOAD CENTER SCHEDULE

Designation: **106**
MAINS: 150A | TYPE: 1 | O.C. DEVICE: M.L.O.
VOLTAGE: 120/208-1Ø-3W | MIN. AIC RATING: 10,000
LOCATION: SEE PLANS | SUPPLY: SEE ONE-LINE | MOUNTING: RECESSED
Single: x | Double:

CKT	POLE	TRIP	WIRE	GND	C	LOAD	KVA Ø A	KVA Ø B	LOAD	C	GND	WIRE	TRIP	POLE	CKT
1	1	20	12	12	**	REFRIGERATOR	1.00	0.18	COUNTERTOP RECEPTACLES	**	12	12	20	1	2
3	1	20	12	12	**	COUNTERTOP RECEPTACLES		0.18	4.00 RANGE	**	10	8	50	2	4
5	1	20	12	12	**	BATHROOM GFI	0.18	4.00						/	6
7	1	20	12	12	**	MICROWAVE		1.00	0.90 BEDROOM RECEPTACLES	**	12	12	20	1	8
9	1	20	12	12	**	BEDROOM RECEPTACLES	0.90	1.20	DISHWASHER	**	12	12	20	1	10
11	1	20	12	12	**	RECEPTACLES		1.08	1.20				20	1	12
13	1	20	12	12	**	RECEPTACLES	1.08		SPACE						14
15						SPACE			SPACE						16
17						SPACE			SPACE						18
19	2	45	8	10	**	AH-C HEAT		3.60	SPACE						20
21	/						3.60		SPACE						22
23	2	15	14	14	**	AH-C		0.50	SPACE						24
25	/						0.50	2.25	WH-1	**	10	10	30	2	26
27	2	20	12	12	**	HP-B		1.35	2.25					/	28
29	/						1.35	0.50	LIGHTING	**	14	14	15	1	30

TOTAL/PHASE 16.74 | 16.06

CONNECTED LOAD 32.80 (kVA)
DEMAND LOAD @ 0.80 26.24 (kVA)
DEMAND 126.15 (A)

*** PROVIDE LOCKED BREAKER**
**** METAL CLAD (MC) OR CONDUCTORS IN CONDUIT SHALL BE USED WHERE SUBJECT TO PHYSICAL DAMAGE. NON-METALLIC (NM) CAN BE USED IN CONCELED PLACES AND NOT SUBJECT TO PHYSICAL DAMAGE.**

ALL 120V-1Ø CIRCUITS SHALL BE AFCI-PROTECTED PER NEC ARTICLE 210.12. PROVIDE AFCI PROTECTION AT THE CIRCUIT BREAKER LEVEL. ALL 120V-1Ø, 15- AND 20-AMPERE BRANCH CIRCUITS SUPPLYING OUTLETS OR DEVICES INSTALLED IN DWELLING UNIT KITCHENS, FAMILY ROOMS, DINING ROOMS, LIVING ROOMS, PARLORS, LIBRARIES, DENS, BEDROOMS, SUNROOMS, RECREATION ROOMS, CLOSETS, HALLWAYS, LAUNDRY AREAS, OR SIMILAR ROOMS OR AREAS SHALL BE PROTECTED BY A LISTED COMBINATION AFCI BREAKER.

TYPICAL LOAD CENTER SCHEDULE

Designation: **107**
MAINS: 150A | TYPE: 1 | O.C. DEVICE: M.L.O.
VOLTAGE: 120/208-1Ø-3W | MIN. AIC RATING: 10,000
LOCATION: SEE PLANS | SUPPLY: SEE ONE-LINE | MOUNTING: RECESSED
Single: x | Double:

CKT	POLE	TRIP	WIRE	GND	C	LOAD	KVA Ø A	KVA Ø B	LOAD	C	GND	WIRE	TRIP	POLE	CKT
1	1	20	12	12	**	REFRIGERATOR	1.00	0.18	COUNTERTOP RECEPTACLES	**	12	12	20	1	2
3	1	20	12	12	**	COUNTERTOP RECEPTACLES		0.18	4.00 RANGE	**	10	8	50	2	4
5	1	20	12	12	**	BATHROOM GFI	0.18	4.00						/	6
7	1	20	12	12	**	MICROWAVE		1.00	0.90 BEDROOM RECEPTACLES	**	12	12	20	1	8
9	1	20	12	12	**	RECEPTACLES	0.90	1.20	DISHWASHER	**	12	12	20	1	10
11	1	20	12	12	**	RECEPTACLES		0.72	1.20				20	1	12
13						SPACE			SPACE						14
15						SPACE			SPACE						16
17						SPACE			SPACE						18
19	2	45	8	10	**	AH-C HEAT		3.60	SPACE						20
21	/						3.60		SPACE						22
23	2	15	14	14	**	AH-C		0.50	SPACE						24
25	/						0.50	2.25	WH-1		10	10	30	2	26
27	2	20	12	12	**	HP-B		1.35	2.25					/	28
29	/						1.35	0.50	LIGHTING	**	14	14	15	1	30

TOTAL/PHASE 15.66 | 15.70

CONNECTED LOAD 31.36 (kVA)
DEMAND LOAD @ 0.80 25.09 (kVA)
DEMAND 120.62 (A)

*** PROVIDE LOCKED BREAKER**
**** METAL CLAD (MC) OR CONDUCTORS IN CONDUIT SHALL BE USED WHERE SUBJECT TO PHYSICAL DAMAGE. NON-METALLIC (NM) CAN BE USED IN CONCELED PLACES AND NOT SUBJECT TO PHYSICAL DAMAGE.**

ALL 120V-1Ø CIRCUITS SHALL BE AFCI-PROTECTED PER NEC ARTICLE 210.12. PROVIDE AFCI PROTECTION AT THE CIRCUIT BREAKER LEVEL. ALL 120V-1Ø, 15- AND 20-AMPERE BRANCH CIRCUITS SUPPLYING OUTLETS OR DEVICES INSTALLED IN DWELLING UNIT KITCHENS, FAMILY ROOMS, DINING ROOMS, LIVING ROOMS, PARLORS, LIBRARIES, DENS, BEDROOMS, SUNROOMS, RECREATION ROOMS, CLOSETS, HALLWAYS, LAUNDRY AREAS, OR SIMILAR ROOMS OR AREAS SHALL BE PROTECTED BY A LISTED COMBINATION AFCI BREAKER.

TYPICAL LOAD CENTER SCHEDULE

Designation: **108**
MAINS: 150A | TYPE: 1 | O.C. DEVICE: M.L.O.
VOLTAGE: 120/208-1Ø-3W | MIN. AIC RATING: 10,000
LOCATION: SEE PLANS | SUPPLY: SEE ONE-LINE | MOUNTING: RECESSED
Single: x | Double:

CKT	POLE	TRIP	WIRE	GND	C	LOAD	KVA Ø A	KVA Ø B	LOAD	C	GND	WIRE	TRIP	POLE	CKT
1	1	20	12	12	**	REFRIGERATOR	1.00	0.18	COUNTERTOP RECEPTACLES	**	12	12	20	1	2
3	1	20	12	12	**	COUNTERTOP RECEPTACLES		0.18	4.00 RANGE	**	10	8	50	2	4
5	1	20	12	12	**	BATHROOM GFI	0.18	4.00						/	6
7	1	20	12	12	**	MICROWAVE		1.00	0.90 BEDROOM RECEPTACLES	**	12	12	20	1	8
9	1	20	12	12	**	RECEPTACLES	1.08	1.20	DISHWASHER	**	12	12	20	1	10
11						SPACE		1.20					20	1	12
13						SPACE			SPACE						14
15						SPACE			SPACE						16
17						SPACE			SPACE						18
19	2	45	8	10	**	AH-C HEAT		3.60	SPACE						20
21	/						3.60		SPACE						22
23	2	15	14	14	**	AH-C		0.50	SPACE						24
25	/						0.50	2.25	WH-1	**	10	10	30	2	26
27	2	20	12	12	**	HP-B		1.35	2.25					/	28
29	/						1.35	0.50	LIGHTING	**	14	14	15	1	30

TOTAL/PHASE 15.84 | 14.98

CONNECTED LOAD 30.82 (kVA)
DEMAND LOAD @ 0.80 24.66 (kVA)
DEMAND 118.54 (A)

*** PROVIDE LOCKED BREAKER**
**** METAL CLAD (MC) OR CONDUCTORS IN CONDUIT SHALL BE USED WHERE SUBJECT TO PHYSICAL DAMAGE. NON-METALLIC (NM) CAN BE USED IN CONCELED PLACES AND NOT SUBJECT TO PHYSICAL DAMAGE.**

ALL 120V-1Ø CIRCUITS SHALL BE AFCI-PROTECTED PER NEC ARTICLE 210.12. PROVIDE AFCI PROTECTION AT THE CIRCUIT BREAKER LEVEL. ALL 120V-1Ø, 15- AND 20-AMPERE BRANCH CIRCUITS SUPPLYING OUTLETS OR DEVICES INSTALLED IN DWELLING UNIT KITCHENS, FAMILY ROOMS, DINING ROOMS, LIVING ROOMS, PARLORS, LIBRARIES, DENS, BEDROOMS, SUNROOMS, RECREATION ROOMS, CLOSETS, HALLWAYS, LAUNDRY AREAS, OR SIMILAR ROOMS OR AREAS SHALL BE PROTECTED BY A LISTED COMBINATION AFCI BREAKER.

TYPICAL LOAD CENTER SCHEDULE

Designation: **109**
MAINS: 150A | TYPE: 1 | O.C. DEVICE: M.L.O.
VOLTAGE: 120/208-1Ø-3W | MIN. AIC RATING: 10,000
LOCATION: SEE PLANS | SUPPLY: SEE ONE-LINE | MOUNTING: RECESSED
Single: x | Double:

CKT	POLE	TRIP	WIRE	GND	C	LOAD	KVA Ø A	KVA Ø B	LOAD	C	GND	WIRE	TRIP	POLE	CKT
1	1	20	12	12	**	REFRIGERATOR	1.00	0.18	COUNTERTOP RECEPTACLES	**	12	12	20	1	2
3	1	20	12	12	**	COUNTERTOP RECEPTACLES		0.18	4.00 RANGE	**	10	8	50	2	4
5	1	20	12	12	**	BATHROOM GFI	0.18	4.00						/	6
7	1	20	12	12	**	MICROWAVE		1.00	0.90 BEDROOM RECEPTACLES	**	12	12	20	1	8
9	1	20	12	12	**	RECEPTACLES	0.72	1.20	DISHWASHER	**	12	12	20	1	10
11	1	20	12	12	**	RECEPTACLES		0.72	1.20				20	1	12
13						SPACE			SPACE						14
15						SPACE			SPACE						16
17						SPACE			SPACE						18
19	2	45	8	10	**	AH-C HEAT		3.60	SPACE						20
21	/						3.60		SPACE						22
23	2	15	14	14	**	AH-C		0.50	SPACE						24
25	/						0.50	2.25	WH-1	**	10	10	30	2	26
27	2	20	12	12	**	HP-B		1.35	2.25					/	28
29	/						1.35	0.50	LIGHTING	**	14	14	15	1	30

TOTAL/PHASE 15.48 | 15.70

CONNECTED LOAD 31.18 (kVA)
DEMAND LOAD @ 0.80 24.94 (kVA)
DEMAND 119.92 (A)

*** PROVIDE LOCKED BREAKER**
**** METAL CLAD (MC) OR CONDUCTORS IN CONDUIT SHALL BE USED WHERE SUBJECT TO PHYSICAL DAMAGE. NON-METALLIC (NM) CAN BE USED IN CONCELED PLACES AND NOT SUBJECT TO PHYSICAL DAMAGE.**

ALL 120V-1Ø CIRCUITS SHALL BE AFCI-PROTECTED PER NEC ARTICLE 210.12. PROVIDE AFCI PROTECTION AT THE CIRCUIT BREAKER LEVEL. ALL 120V-1Ø, 15- AND 20-AMPERE BRANCH CIRCUITS SUPPLYING OUTLETS OR DEVICES INSTALLED IN DWELLING UNIT KITCHENS, FAMILY ROOMS, DINING ROOMS, LIVING ROOMS, PARLORS, LIBRARIES, DENS, BEDROOMS, SUNROOMS, RECREATION ROOMS, CLOSETS, HALLWAYS, LAUNDRY AREAS, OR SIMILAR ROOMS OR AREAS SHALL BE PROTECTED BY A LISTED COMBINATION AFCI BREAKER.

TYPICAL LOAD CENTER SCHEDULE

Designation: **110**
MAINS: 150A | TYPE: 1 | O.C. DEVICE: M.L.O.
VOLTAGE: 120/208-1Ø-3W | MIN. AIC RATING: 10,000
LOCATION: SEE PLANS | SUPPLY: SEE ONE-LINE | MOUNTING: RECESSED
Single: x | Double:

CKT	POLE	TRIP	WIRE	GND	C	LOAD	KVA Ø A	KVA Ø B	LOAD	C	GND	WIRE	TRIP	POLE	CKT
1	1	20	12	12	**	REFRIGERATOR	1.00	0.18	COUNTERTOP RECEPTACLES	**	12	12	20	1	2
3	1	20	12	12	**	COUNTERTOP RECEPTACLES		0.18	4.00 RANGE	**	10	8	50	2	4
5	1	20	12	12	**	BATHROOM GFI	0.18	4.00						/	6
7	1	20	12	12	**	MICROWAVE		1.00	0.90 BEDROOM RECEPTACLES	**	12	12	20	1	8
9	1	20	12	12	**	RECEPTACLES	0.72	1.20	DISHWASHER	**	12	12	20	1	10
11	1	20	12	12	**	RECEPTACLES		0.72	1.20				20	1	12
13						SPACE			SPACE						14
15						SPACE			SPACE						16
17						SPACE			SPACE						18
19	2	45	8	10	**	AH-C HEAT		3.60	SPACE						20
21	/						3.60

TYPICAL LOAD CENTER SCHEDULE

Designation: **201** | MAINS: 150A | TYPE: 1 | O.C. DEVICE: M.L.O. | VOLTAGE: 120/208-1Ø-3W | MIN. AIC RATING: 10,000 | LOCATION: SEE PLANS | SUPPLY: SEE ONE-LINE | MOUNTING: RECESSED | Single: x | Double:

CKT	POLE	TRIP	WIRE	GND	C	LOAD	KVA Ø A	KVA Ø B	LOAD	C	GND	WIRE	TRIP	POLE	CKT
1	1	20	12	12	**	REFRIGERATOR	1.00	0.18	COUNTERTOP RECEPTACLES	**	12	12	20	1	2
3	1	20	12	12	**	COUNTERTOP RECEPTACLES		0.18	4.00 RANGE	**	10	8	50	2	4
5	1	20	12	12	**	BATHROOM GFI	0.18	4.00						/	6
7	1	20	12	12	**	MICROWAVE		1.00	0.90 BEDROOM RECEPTACLES	**	12	12	20	1	8
9	1	20	12	12	**	BEDROOM RECEPTACLES	1.08	1.20	DISHWASHER	**	12	12	20	1	10
11	1	20	12	12	**	RECEPTACLES		1.44	1.20				20	1	12
13						SPACE			SPACE						14
15						SPACE			SPACE						16
17						SPACE			SPACE						18
19	2	45	8	10	**	AH-B HEAT		3.60	SPACE						20
21	/						3.60		SPACE						22
23	2	15	14	14	**	AH-B		0.50	SPACE						24
25	/						0.50	2.25	WH-1	**	10	10	30	2	26
27	2	20	12	12	**	HP-B		1.35	2.25					/	28
29	/						1.35	0.50	LIGHTING	**	14	14	15	1	30

TOTAL/PHASE: 15.84 | 16.42

*** PROVIDE LOCKED BREAKER**
**** METAL CLAD (MC) OR CONDUCTORS IN CONDUIT SHALL BE USED WHERE SUBJECT TO PHYSICAL DAMAGE. NON-METALLIC (NM) CAN BE USED IN CONCEALED PLACES AND NOT SUBJECT TO PHYSICAL DAMAGE.**

CONNECTED LOAD 32.26 (kVA)
DEMAND LOAD @ 0.80 25.81 (kVA)
DEMAND 124.08 (A)

ALL 120V-1Ø CIRCUITS SHALL BE AFCI-PROTECTED PER NEC ARTICLE 210.12. PROVIDE AFCI PROTECTION AT THE CIRCUIT BREAKER LEVEL. ALL 120V-1Ø, 15- AND 20-AMPERE BRANCH CIRCUITS SUPPLYING OUTLETS OR DEVICES INSTALLED IN DWELLING UNIT KITCHENS, FAMILY ROOMS, DINING ROOMS, LIVING ROOMS, PARLORS, LIBRARIES, DENS, BEDROOMS, SUNROOMS, RECREATION ROOMS, CLOSETS, HALLWAYS, LAUNDRY AREAS, OR SIMILAR ROOMS OR AREAS SHALL BE PROTECTED BY A LISTED COMBINATION AFCI BREAKER.

TYPICAL LOAD CENTER SCHEDULE

Designation: **202** | MAINS: 150A | TYPE: 1 | O.C. DEVICE: M.L.O. | VOLTAGE: 120/208-1Ø-3W | MIN. AIC RATING: 10,000 | LOCATION: SEE PLANS | SUPPLY: SEE ONE-LINE | MOUNTING: RECESSED | Single: x | Double:

CKT	POLE	TRIP	WIRE	GND	C	LOAD	KVA Ø A	KVA Ø B	LOAD	C	GND	WIRE	TRIP	POLE	CKT
1	1	20	12	12	**	REFRIGERATOR	1.00	0.18	COUNTERTOP RECEPTACLES	**	12	12	20	1	2
3	1	20	12	12	**	COUNTERTOP RECEPTACLES		0.18	4.00 RANGE	**	10	8	50	2	4
5	1	20	12	12	**	BATHROOM GFI	0.18	4.00						/	6
7	1	20	12	12	**	MICROWAVE		1.00	1.26 BEDROOM RECEPTACLES	**	12	12	20	1	8
9	1	20	12	12	**	RECEPTACLES	1.08	1.20	DISHWASHER	**	12	12	20	1	10
11	1	20	12	12	**	RECEPTACLES		1.08	1.20				20	1	12
13						SPACE			SPACE						14
15						SPACE			SPACE						16
17						SPACE			SPACE						18
19	2	40	8	10	**	AH-A HEAT		2.88	SPACE						20
21	/						2.88		SPACE						22
23	2	15	14	14	**	AH-A		0.50	SPACE						24
25	/						0.50	2.25	WH-1	**	10	10	30	2	26
27	2	20	12	12	**	HP-A		1.25	2.25					/	28
29	/						1.25	0.50	LIGHTING	**	14	14	15	1	30

TOTAL/PHASE: 15.02 | 15.60

*** PROVIDE LOCKED BREAKER**
**** METAL CLAD (MC) OR CONDUCTORS IN CONDUIT SHALL BE USED WHERE SUBJECT TO PHYSICAL DAMAGE. NON-METALLIC (NM) CAN BE USED IN CONCEALED PLACES AND NOT SUBJECT TO PHYSICAL DAMAGE.**

CONNECTED LOAD 30.62 (kVA)
DEMAND LOAD @ 0.80 24.50 (kVA)
DEMAND 117.77 (A)

ALL 120V-1Ø CIRCUITS SHALL BE AFCI-PROTECTED PER NEC ARTICLE 210.12. PROVIDE AFCI PROTECTION AT THE CIRCUIT BREAKER LEVEL. ALL 120V-1Ø, 15- AND 20-AMPERE BRANCH CIRCUITS SUPPLYING OUTLETS OR DEVICES INSTALLED IN DWELLING UNIT KITCHENS, FAMILY ROOMS, DINING ROOMS, LIVING ROOMS, PARLORS, LIBRARIES, DENS, BEDROOMS, SUNROOMS, RECREATION ROOMS, CLOSETS, HALLWAYS, LAUNDRY AREAS, OR SIMILAR ROOMS OR AREAS SHALL BE PROTECTED BY A LISTED COMBINATION AFCI BREAKER.

TYPICAL LOAD CENTER SCHEDULE

Designation: **301** | MAINS: 150A | TYPE: 1 | O.C. DEVICE: M.L.O. | VOLTAGE: 120/208-1Ø-3W | MIN. AIC RATING: 10,000 | LOCATION: SEE PLANS | SUPPLY: SEE ONE-LINE | MOUNTING: RECESSED | Single: x | Double:

CKT	POLE	TRIP	WIRE	GND	C	LOAD	KVA Ø A	KVA Ø B	LOAD	C	GND	WIRE	TRIP	POLE	CKT
1	1	20	12	12	**	REFRIGERATOR	1.00	0.18	COUNTERTOP RECEPTACLES	**	12	12	20	1	2
3	1	20	12	12	**	COUNTERTOP RECEPTACLES		0.18	4.00 RANGE	**	10	8	50	2	4
5	1	20	12	12	**	BATHROOM GFI	0.18	4.00						/	6
7	1	20	12	12	**	MICROWAVE		1.00	1.44 BEDROOM RECEPTACLES	**	12	12	20	1	8
9	1	20	12	12	**	BEDROOM RECEPTACLES	1.44	1.20	DISHWASHER	**	12	12	20	1	10
11	1	20	12	12	**	RECEPTACLES		1.62	1.20				20	1	12
13	1	20	12	12	**	RECEPTACLES	1.80		SPACE						14
15						SPACE			SPACE						16
17						SPACE			SPACE						18
19	2	40	8	10	**	AH-D HEAT		2.88	SPACE						20
21	/						2.88		SPACE						22
23	2	15	14	14	**	AH-D		0.50	SPACE						24
25	/						0.50	2.25	WH-1	**	10	10	30	2	26
27	2	30	10	10	**	HP-D		1.98	2.25					/	28
29	/						1.98	0.50	LIGHTING	**	14	14	15	1	30

TOTAL/PHASE: 17.91 | 17.05

*** PROVIDE LOCKED BREAKER**
**** METAL CLAD (MC) OR CONDUCTORS IN CONDUIT SHALL BE USED WHERE SUBJECT TO PHYSICAL DAMAGE. NON-METALLIC (NM) CAN BE USED IN CONCEALED PLACES AND NOT SUBJECT TO PHYSICAL DAMAGE.**

CONNECTED LOAD 34.96 (kVA)
DEMAND LOAD @ 0.80 27.97 (kVA)
DEMAND 134.46 (A)

ALL 120V-1Ø CIRCUITS SHALL BE AFCI-PROTECTED PER NEC ARTICLE 210.12. PROVIDE AFCI PROTECTION AT THE CIRCUIT BREAKER LEVEL. ALL 120V-1Ø, 15- AND 20-AMPERE BRANCH CIRCUITS SUPPLYING OUTLETS OR DEVICES INSTALLED IN DWELLING UNIT KITCHENS, FAMILY ROOMS, DINING ROOMS, LIVING ROOMS, PARLORS, LIBRARIES, DENS, BEDROOMS, SUNROOMS, RECREATION ROOMS, CLOSETS, HALLWAYS, LAUNDRY AREAS, OR SIMILAR ROOMS OR AREAS SHALL BE PROTECTED BY A LISTED COMBINATION AFCI BREAKER.

TYPICAL LOAD CENTER SCHEDULE

Designation: **302** | MAINS: 150A | TYPE: 1 | O.C. DEVICE: M.L.O. | VOLTAGE: 120/208-1Ø-3W | MIN. AIC RATING: 10,000 | LOCATION: SEE PLANS | SUPPLY: SEE ONE-LINE | MOUNTING: RECESSED | Single: x | Double:

CKT	POLE	TRIP	WIRE	GND	C	LOAD	KVA Ø A	KVA Ø B	LOAD	C	GND	WIRE	TRIP	POLE	CKT
1	1	20	12	12	**	REFRIGERATOR	1.00	0.18	COUNTERTOP RECEPTACLES	**	12	12	20	1	2
3	1	20	12	12	**	COUNTERTOP RECEPTACLES		0.18	4.00 RANGE	**	10	8	50	2	4
5	1	20	12	12	**	BATHROOM GFI	0.18	4.00						/	6
7	1	20	12	12	**	MICROWAVE		1.00	0.90 BEDROOM RECEPTACLES	**	12	12	20	1	8
9	1	20	12	12	**	BEDROOM RECEPTACLES	0.90	1.20	DISHWASHER	**	12	12	20	1	10
11	1	20	12	12	**	RECEPTACLES		1.26	1.20				20	1	12
13	1	20	12	12	**	RECEPTACLES	1.26	0.90	OFFICE RECEPTACLES	**	12	12	20	1	14
15						SPACE			SPACE						16
17						SPACE			SPACE						18
19	2	45	8	10	**	AH-B HEAT		3.60	SPACE						20
21	/						3.60		SPACE						22
23	2	15	14	14	**	AH-B		0.50	SPACE						24
25	/						0.50	2.25	WH-1	**	10	10	30	2	26
27	2	20	12	12	**	HP-B		1.35	2.25					/	28
29	/						1.35	0.50	LIGHTING	**	14	14	15	1	30

TOTAL/PHASE: 17.82 | 16.24

*** PROVIDE LOCKED BREAKER**
**** METAL CLAD (MC) OR CONDUCTORS IN CONDUIT SHALL BE USED WHERE SUBJECT TO PHYSICAL DAMAGE. NON-METALLIC (NM) CAN BE USED IN CONCEALED PLACES AND NOT SUBJECT TO PHYSICAL DAMAGE.**

CONNECTED LOAD 34.06 (kVA)
DEMAND LOAD @ 0.80 27.25 (kVA)
DEMAND 131.00 (A)

ALL 120V-1Ø CIRCUITS SHALL BE AFCI-PROTECTED PER NEC ARTICLE 210.12. PROVIDE AFCI PROTECTION AT THE CIRCUIT BREAKER LEVEL. ALL 120V-1Ø, 15- AND 20-AMPERE BRANCH CIRCUITS SUPPLYING OUTLETS OR DEVICES INSTALLED IN DWELLING UNIT KITCHENS, FAMILY ROOMS, DINING ROOMS, LIVING ROOMS, PARLORS, LIBRARIES, DENS, BEDROOMS, SUNROOMS, RECREATION ROOMS, CLOSETS, HALLWAYS, LAUNDRY AREAS, OR SIMILAR ROOMS OR AREAS SHALL BE PROTECTED BY A LISTED COMBINATION AFCI BREAKER.

TYPICAL LOAD CENTER SCHEDULE

Designation: **303** | MAINS: 150A | TYPE: 1 | O.C. DEVICE: M.L.O. | VOLTAGE: 120/208-1Ø-3W | MIN. AIC RATING: 10,000 | LOCATION: SEE PLANS | SUPPLY: SEE ONE-LINE | MOUNTING: RECESSED | Single: x | Double:

CKT	POLE	TRIP	WIRE	GND	C	LOAD	KVA Ø A	KVA Ø B	LOAD	C	GND	WIRE	TRIP	POLE	CKT
1	1	20	12	12	**	REFRIGERATOR	1.00	0.18	COUNTERTOP RECEPTACLES	**	12	12	20	1	2
3	1	20	12	12	**	COUNTERTOP RECEPTACLES		0.18	4.00 RANGE	**	10	8	50	2	4
5	1	20	12	12	**	BATHROOM GFI	0.18	4.00						/	6
7	1	20	12	12	**	MICROWAVE		1.00	1.26 BEDROOM RECEPTACLES	**	12	12	20	1	8
9	1	20	12	12	**	BEDROOM RECEPTACLES	0.72	1.20	DISHWASHER	**	12	12	20	1	10
11	1	20	12	12	**	RECEPTACLES		1.80	1.20				20	1	12
13						SPACE			SPACE						14
15						SPACE			SPACE						16
17						SPACE			SPACE						18
19	2	45	8	10	**	AH-B HEAT		3.60	SPACE						20
21	/						3.60		SPACE						22
23	2	15	14	14	**	AH-B		0.50	SPACE						24
25	/						0.50	2.25	WH-1	**	10	10	30	2	26
27	2	20	12	12	**	HP-B		1.35	2.25					/	28
29	/						1.35	0.50	LIGHTING	**	14	14	15	1	30

TOTAL/PHASE: 15.48 | 17.14

*** PROVIDE LOCKED BREAKER**
**** METAL CLAD (MC) OR CONDUCTORS IN CONDUIT SHALL BE USED WHERE SUBJECT TO PHYSICAL DAMAGE. NON-METALLIC (NM) CAN BE USED IN CONCEALED PLACES AND NOT SUBJECT TO PHYSICAL DAMAGE.**

CONNECTED LOAD 32.62 (kVA)
DEMAND LOAD @ 0.80 26.10 (kVA)
DEMAND 125.46 (A)

ALL 120V-1Ø CIRCUITS SHALL BE AFCI-PROTECTED PER NEC ARTICLE 210.12. PROVIDE AFCI PROTECTION AT THE CIRCUIT BREAKER LEVEL. ALL 120V-1Ø, 15- AND 20-AMPERE BRANCH CIRCUITS SUPPLYING OUTLETS OR DEVICES INSTALLED IN DWELLING UNIT KITCHENS, FAMILY ROOMS, DINING ROOMS, LIVING ROOMS, PARLORS, LIBRARIES, DENS, BEDROOMS, SUNROOMS, RECREATION ROOMS, CLOSETS, HALLWAYS, LAUNDRY AREAS, OR SIMILAR ROOMS OR AREAS SHALL BE PROTECTED BY A LISTED COMBINATION AFCI BREAKER.

TYPICAL LOAD CENTER SCHEDULE

Designation: **304** | MAINS: 150A | TYPE: 1 | O.C. DEVICE: M.L.O. | VOLTAGE: 120/208-1Ø-3W | MIN. AIC RATING: 10,000 | LOCATION: SEE PLANS | SUPPLY: SEE ONE-LINE | MOUNTING: RECESSED | Single: x | Double:

CKT	POLE	TRIP	WIRE	GND	C	LOAD	KVA Ø A	KVA Ø B	LOAD	C	GND	WIRE	TRIP	POLE	CKT
1	1	20	12	12	**	REFRIGERATOR	1.00	0.18	COUNTERTOP RECEPTACLES	**	12	12	20	1	2
3	1	20	12	12	**	COUNTERTOP RECEPTACLES		0.18	4.00 RANGE	**	10	8	50	2	4
5	1	20	12	12	**	BATHROOM GFI	0.18	4.00						/	6
7	1	20	12	12	**	MICROWAVE		1.00	0.90 BEDROOM RECEPTACLES	**	12	12	20	1	8
9	1	20	12	12	**	BEDROOM RECEPTACLES	0.90	1.20	DISHWASHER	**	12	12	20	1	10
11	1	20	12	12	**	RECEPTACLES		1.26	1.20				20	1	12
13	1	20	12	12	**	RECEPTACLES	1.44	0.90	BEDROOM RECEPTACLES	**	12	12	20	1	14
15						SPACE			SPACE						16
17						SPACE			SPACE						18
19	2	40	8	10	**	AH-A HEAT		2.88	SPACE						20
21	/						2.88		SPACE						22
23	2	15	14	14	**	AH-A		0.50	SPACE						24
25	/						0.50	2.25	WH-1	**	10	10	30	2	26
27	2	20	12	12	**	HP-A		1.25	2.25					/	28
29	/						1.25	0.50	LIGHTING	**	14	14	15	1	30

TOTAL/PHASE: 17.18 | 15.42

*** PROVIDE LOCKED BREAKER**
**** METAL CLAD (MC) OR CONDUCTORS IN CONDUIT SHALL BE USED WHERE SUBJECT TO PHYSICAL DAMAGE. NON-METALLIC (NM) CAN BE USED IN CONCEALED PLACES AND NOT SUBJECT TO PHYSICAL DAMAGE.**

CONNECTED LOAD 32.60 (kVA)
DEMAND LOAD @ 0.80 26.08 (kVA)
DEMAND 125.38 (A)

ALL 120V-1Ø CIRCUITS SHALL BE AFCI-PROTECTED PER NEC ARTICLE 210.12. PROVIDE AFCI PROTECTION AT THE CIRCUIT BREAKER LEVEL. ALL 120V-1Ø, 15- AND 20-AMPERE BRANCH CIRCUITS SUPPLYING OUTLETS OR DEVICES INSTALLED IN DWELLING UNIT KITCHENS, FAMILY ROOMS, DINING ROOMS, LIVING ROOMS, PARLORS, LIBRARIES, DENS, BEDROOMS, SUNROOMS, RECREATION ROOMS, CLOSETS, HALLWAYS, LAUNDRY AREAS, OR SIMILAR ROOMS OR AREAS SHALL BE PROTECTED BY A LISTED COMBINATION AFCI BREAKER.

TYPICAL LOAD CENTER SCHEDULE

Designation: **305** | MAINS: 150A | TYPE: 1 | O.C. DEVICE: M.L.O. | VOLTAGE: 120/208-1Ø-3W | MIN. AIC RATING: 10,000 | LOCATION: SEE PLANS | SUPPLY: SEE ONE-LINE | MOUNTING: RECESSED | Single: x | Double:

CKT	POLE	TRIP	WIRE	GND	C	LOAD	KVA Ø A	KVA Ø B	LOAD	C	GND	WIRE	TRIP	POLE	CKT
1	1	20	12	12	**	REFRIGERATOR	1.00	0.18	COUNTERTOP RECEPTACLES	**	12	12	20	1	2
3	1	20	12	12	**	COUNTERTOP RECEPTACLES		0.18	4.00 RANGE	**	10	8	50	2	4
5	1	20	12	12	**	BATHROOM GFI	0.18	4.00						/	6
7	1	20	12	12	**	MICROWAVE		1.00	0.90 BEDROOM RECEPTACLES	**	12	12	20	1	8
9	1	20	12	12	**	BEDROOM RECEPTACLES	1.08	1.20	DISHWASHER	**	12	12	20	1	10
11	1	20	12	12	**	RECEPTACLES		1.44	1.20				20	1	12
13						SPACE			SPACE						14
15						SPACE			SPACE						16
17						SPACE			SPACE						18
19	2	40	8	10	**	AH-A HEAT		2.88	SPACE						20
21	/						2.88		SPACE						22
23	2	15	14	14	**	AH-A		0.50	SPACE						24
25	/						0.50	2.25	WH-1	**	10	10	30	2	26
27	2	20	12	12	**	HP-A		1.25	2.25					/	28
29	/						1.25	0.50	LIGHTING	**	14	14	15	1	30

TOTAL/PHASE: 15.02 | 15.60

*** PROVIDE LOCKED BREAKER**
**** METAL CLAD (MC) OR CONDUCTORS IN CONDUIT SHALL BE USED WHERE SUBJECT TO PHYSICAL DAMAGE. NON-METALLIC (NM) CAN BE USED IN CONCEALED PLACES AND NOT SUBJECT TO PHYSICAL DAMAGE.**

CONNECTED LOAD 30.62 (kVA)
DEMAND LOAD @ 0.80 24.50 (kVA)
DEMAND 117.77 (A)

ALL 120V-1Ø CIRCUITS SHALL BE AFCI-PROTECTED PER NEC ARTICLE 210.12. PROVIDE AFCI PROTECTION AT THE CIRCUIT BREAKER LEVEL. ALL 120V-1Ø, 15- AND 20-AMPERE BRANCH CIRCUITS SUPPLYING OUTLETS OR DEVICES INSTALLED IN DWELLING UNIT KITCHENS, FAMILY ROOMS, DINING ROOMS, LIVING ROOMS, PARLORS, LIBRARIES, DENS, BEDROOMS, SUNROOMS, RECREATION ROOMS, CLOSETS, HALLWAYS, LAUNDRY AREAS, OR SIMILAR ROOMS OR AREAS SHALL BE PROTECTED BY A LISTED COMBINATION AFCI BREAKER.

TYPICAL LOAD CENTER SCHEDULE

Designation: **306** | MAINS: 150A | TYPE: 1 | O.C. DEVICE: M.L.O. | VOLTAGE: 120/208-1Ø-3W | MIN. AIC RATING: 10,000 | LOCATION: SEE PLANS | SUPPLY: SEE ONE-LINE | MOUNTING: RECESSED | Single: x | Double:

CKT	POLE	TRIP	WIRE	GND	C	LOAD	KVA Ø A	KVA Ø B	LOAD	C	GND	WIRE	TRIP	POLE	CKT
1	1	20	12	12	**	REFRIGERATOR	1.00	0.18	COUNTERTOP RECEPTACLES	**	12	12	20	1	2
3	1	20	12	12	**	COUNTERTOP RECEPTACLES		0.18	4.00 RANGE	**	10	8	50	2	4
5	1	20	12	12	**	BATHROOM GFI	0.18	4.00						/	6
7	1	20	12	12	**	MICROWAVE		1.00	1.08 BEDROOM RECEPTACLES	**	12	12	20	1	8
9	1	20	12	12	**	BEDROOM RECEPTACLES	1.26	1.20	DISHWASHER	**	12	12	20	1	10
11	1	20	12	12	**	RECEPTACLES		1.98	1.20				20	1	12
13	1	20	12	12	**	RECEPTACLES	1.98		SPACE						14
15						SPACE			SPACE						16
17						SPACE			SPACE						18
19	2	45	8	10	**	AH-B HEAT		3.60	SPACE						20
21	/						3.60		SPACE						22
23	2	15	14	14	**	AH-B		0.50	SPACE						24
25	/						0.50	2.25	WH-1	**	10	10	30	2	26
27	2	20	12	12	**	HP-B		1.35	2.25					/	28
29	/						1.35	0.50	LIGHTING	**	14	14	15	1	30

TOTAL/PHASE: 18.00 | 17.14

*** PROVIDE LOCKED BREAKER**
**** METAL CLAD (MC) OR CONDUCTORS IN CONDUIT SHALL BE USED WHERE SUBJECT TO PHYSICAL DAMAGE. NON-METALLIC (NM) CAN BE USED IN CONCEALED PLACES AND NOT SUBJECT TO PHYSICAL DAMAGE.**

CONNECTED LOAD 35.14 (kVA)
DEMAND LOAD @ 0.80 28.11 (kVA)
DEMAND 135.15 (A)

ALL 120V-1Ø CIRCUITS SHALL BE AFCI-PROTECTED PER NEC ARTICLE 210.12. PROVIDE AFCI PROTECTION AT THE CIRCUIT BREAKER LEVEL. ALL 120V-1Ø, 15- AND 20-AMPERE BRANCH CIRCUITS SUPPLYING OUTLETS OR DEVICES INSTALLED IN DWELLING UNIT KITCHENS, FAMILY ROOMS, DINING ROOMS, LIVING ROOMS, PARLORS, LIBRARIES, DENS, BEDROOMS, SUNROOMS, RECREATION ROOMS, CLOSETS, HALLWAYS, LAUNDRY AREAS, OR SIMILAR ROOMS OR AREAS SHALL BE PROTECTED BY A LISTED COMBINATION AFCI BREAKER.

TYPICAL LOAD CENTER SCHEDULE

Designation: **307** | MAINS: 150A | TYPE: 1 | O.C. DEVICE: M.L.O. | VOLTAGE: 120/208-1Ø-3W | MIN. AIC RATING: 10,000 | LOCATION: SEE PLANS | SUPPLY: SEE ONE-LINE | MOUNTING: RECESSED | Single: x | Double:

CKT	POLE	TRIP	WIRE	GND	C	LOAD	KVA Ø A	KVA Ø B	LOAD	C	GND	WIRE	TRIP	POLE	CKT
1	1	20	12	12	**	REFRIGERATOR	1.00	0.18	COUNTERTOP RECEPTACLES	**	12	12	20	1	2
3	1	20	12	12	**	COUNTERTOP RECEPTACLES		0.36	4.00 RANGE	**	10	8	50	2	4
5	1	20	12	12	**	BATHROOM GFI	0.18	4.00						/	6
7	1	20	12	12	**	MICROWAVE		1.00	0.90 BEDROOM RECEPTACLES	**	12	12	20	1	8
9	1	20	12	12	**	BEDROOM RECEPTACLES	0.90	1.20	DISHWASHER	**	12	12	20	1	10
11	1	20	12	12	**	RECEPTACLES		1.08	1.20				20	1	12
13	1	20	12	12	**	RECEPTACLES	1.08		SPACE						14
15						SPACE			SPACE						16
17						SPACE			SPACE						18
19	2	40	8	10	**	AH-A HEAT		2.88	SPACE						20
21	/						2.88		SPACE						22
23	2	15	14	14	**	AH-A		0.50	SPACE						24
25	/						0.50	2.25	WH-1	**	10	10	30	2	26
27	2	20	12	12	**	HP-A		1.25	2.25					/	28
29	/						1.25	0.50	LIGHTING	**	14	14	15	1	30

TOTAL/PHASE: 15.92 | 15.42

*** PROVIDE LOCKED BREAKER**
**** METAL CLAD (MC) OR CONDUCTORS IN CONDUIT SHALL BE USED WHERE SUBJECT TO PHYSICAL DAMAGE. NON-METALLIC (NM) CAN BE USED IN CONCEALED PLACES AND NOT SUBJECT TO PHYSICAL DAMAGE.**

CONNECTED LOAD 31.34 (kVA)
DEMAND LOAD @ 0.80 25.07 (kVA)
DEMAND 120.54 (A)

ALL 120V-1Ø CIRCUITS SHALL BE AFCI-PROTECTED PER NEC ARTICLE 210.12. PROVIDE AFCI PROTECTION AT THE CIRCUIT BREAKER LEVEL. ALL 120V-1Ø, 15- AND 20-AMPERE BRANCH CIRCUITS SUPPLYING OUTLETS OR DEVICES INSTALLED IN DWELLING UNIT KITCHENS, FAMILY ROOMS, DINING ROOMS, LIVING ROOMS, PARLORS, LIBRARIES, DENS, BEDROOMS, SUNROOMS, RECREATION ROOMS, CLOSETS, HALLWAYS, LAUNDRY AREAS, OR SIMILAR ROOMS OR AREAS SHALL BE PROTECTED BY A LISTED COMBINATION AFCI BREAKER.

TYPICAL LOAD CENTER SCHEDULE

Designation: **401** | MAINS: 150A | TYPE: 1 | O.C. DEVICE: M.L.O. | VOLTAGE: 120/208-1Ø-3W | MIN. AIC RATING: 10,000 | LOCATION: SEE PLANS | SUPPLY: SEE ONE-LINE | MOUNTING: RECESSED | Single: x | Double:

CKT	POLE	TRIP	WIRE	GND	C	LOAD	KVA Ø A	KVA Ø B	LOAD	C	GND	WIRE	TRIP	POLE	CKT
1	1	20	12	12	**	REFRIGERATOR	1.00	0.18	COUNTERTOP RECEPTACLES	**	12	12	20	1	2
3	1	20	12	12	**	COUNTERTOP RECEPTACLES		0.18	4.00 RANGE	**	10	8	50	2	4
5	1	20	12	12	**	BATHROOM GFI	0.18	4.00						/	6
7	1	20	12	12	**	MICROWAVE		1.00	0.90 BEDROOM RECEPTACLES	**	12	12	20	1	8
9	1	20	12	12	**	BEDROOM RECEPTACLES	1.08	1.20	DISHWASHER	**	12	12	20	1	10
11	1	20	12	12	**	RECEPTACLES		1.08	1.20				20	1

TYPICAL LOAD CENTER SCHEDULE

Designation: 501 | MAINS: 150A | TYPE: 1 | O.C. DEVICE: M.L.O. | VOLTAGE: 120/208-1Ø-3W | MIN. AIC RATING: 10,000 | LOCATION: SEE PLANS | SUPPLY: SEE ONE-LINE | MOUNTING: RECESSED | Single: x | Double:

CKT	POLE	TRIP	WIRE	GND	C	LOAD	KVA Ø A	KVA Ø B	LOAD	C	GND	WIRE	TRIP	POLE	CKT
1	1	20	12	12	**	REFRIGERATOR	1.00	0.18	COUNTERTOP RECEPTACLES	**	12	12	20	1	2
3	1	20	12	12	**	COUNTERTOP RECEPTACLES		0.18	4.00 RANGE	**	10	8	50	2	4
5	1	20	12	12	**	BATHROOM GFI	0.18	4.00						/	6
7	1	20	12	12	**	MICROWAVE		1.00	0.90 BEDROOM RECEPTACLES	**	12	12	20	1	8
9	1	20	12	12	**	BEDROOM RECEPTACLES	0.90	1.20	DISHWASHER	**	12	12	20	1	10
11	1	20	12	12	**	RECEPTACLES		1.80	1.20				20	1	12
13	1	20	12	12	**	RECEPTACLES	1.44	1.08	BEDROOM RECEPTACLES	**	12	12	20	1	14
15						SPACE			SPACE						16
17						SPACE			SPACE						18
19	2	40	8	10	**	AH-D HEAT		2.88	SPACE						20
21	/						2.88		SPACE						22
23	2	15	14	14	**	AH-D		0.50	SPACE						24
25	/						0.50	2.25	WH-1	**	10	10	30	2	26
27	2	30	10	10	**	HP-D		1.98	2.25					/	28
29	/						1.98	0.50	LIGHTING	**	14	14	15	1	30

TOTAL/PHASE: 18.09 | 16.69

*** PROVIDE LOCKED BREAKER**
**** METAL CLAD (MC) OR CONDUCTORS IN CONDUIT SHALL BE USED WHERE SUBJECT TO PHYSICAL DAMAGE. NON-METALLIC (NM) CAN BE USED IN CONCELED PLACES AND NOT SUBJECT TO PHYSICAL DAMAGE.**

CONNECTED LOAD 34.78 (kVA)
DEMAND LOAD @ 0.80 27.82 (kVA)
DEMAND 133.77 (A)

ALL 120V-1Ø CIRCUITS SHALL BE AFCI-PROTECTED PER NEC ARTICLE 210.12. PROVIDE AFCI PROTECTION AT THE CIRCUIT BREAKER LEVEL. ALL 120V-1Ø, 15- AND 20-AMPERE BRANCH CIRCUITS SUPPLYING OUTLETS OR DEVICES INSTALLED IN DWELLING UNIT KITCHENS, FAMILY ROOMS, DINING ROOMS, LIVING ROOMS, PARLORS, LIBRARIES, DENS, BEDROOMS, SUNROOMS, RECREATION ROOMS, CLOSETS, HALLWAYS, LAUNDRY AREAS, OR SIMILAR ROOMS OR AREAS SHALL BE PROTECTED BY A LISTED COMBINATION AFCI BREAKER.

TYPICAL LOAD CENTER SCHEDULE

Designation: 502 | MAINS: 150A | TYPE: 1 | O.C. DEVICE: M.L.O. | VOLTAGE: 120/208-1Ø-3W | MIN. AIC RATING: 10,000 | LOCATION: SEE PLANS | SUPPLY: SEE ONE-LINE | MOUNTING: RECESSED | Single: x | Double:

CKT	POLE	TRIP	WIRE	GND	C	LOAD	KVA Ø A	KVA Ø B	LOAD	C	GND	WIRE	TRIP	POLE	CKT
1	1	20	12	12	**	REFRIGERATOR	1.00	0.18	COUNTERTOP RECEPTACLES	**	12	12	20	1	2
3	1	20	12	12	**	COUNTERTOP RECEPTACLES		0.18	4.00 RANGE	**	10	8	50	2	4
5	1	20	12	12	**	BATHROOM GFI	0.18	4.00						/	6
7	1	20	12	12	**	MICROWAVE		1.00	0.90 BEDROOM RECEPTACLES	**	12	12	20	1	8
9	1	20	12	12	**	BEDROOM RECEPTACLES	0.90	1.20	DISHWASHER	**	12	12	20	1	10
11	1	20	12	12	**	RECEPTACLES		1.44	1.20				20	1	12
13	1	20	12	12	**	RECEPTACLES	1.08		SPACE						14
15						SPACE			SPACE						16
17						SPACE			SPACE						18
19	2	40	8	10	**	AH-A HEAT		2.88	SPACE						20
21	/						2.88		SPACE						22
23	2	15	14	14	**	AH-A		0.50	SPACE						24
25	/						0.50	2.25	WH-1	**	10	10	30	2	26
27	2	20	12	12	**	HP-A		1.25	2.25					/	28
29	/						1.25	0.50	LIGHTING	**	14	14	15	1	30

TOTAL/PHASE: 15.92 | 15.60

*** PROVIDE LOCKED BREAKER**
**** METAL CLAD (MC) OR CONDUCTORS IN CONDUIT SHALL BE USED WHERE SUBJECT TO PHYSICAL DAMAGE. NON-METALLIC (NM) CAN BE USED IN CONCELED PLACES AND NOT SUBJECT TO PHYSICAL DAMAGE.**

CONNECTED LOAD 31.52 (kVA)
DEMAND LOAD @ 0.80 25.22 (kVA)
DEMAND 121.23 (A)

ALL 120V-1Ø CIRCUITS SHALL BE AFCI-PROTECTED PER NEC ARTICLE 210.12. PROVIDE AFCI PROTECTION AT THE CIRCUIT BREAKER LEVEL. ALL 120V-1Ø, 15- AND 20-AMPERE BRANCH CIRCUITS SUPPLYING OUTLETS OR DEVICES INSTALLED IN DWELLING UNIT KITCHENS, FAMILY ROOMS, DINING ROOMS, LIVING ROOMS, PARLORS, LIBRARIES, DENS, BEDROOMS, SUNROOMS, RECREATION ROOMS, CLOSETS, HALLWAYS, LAUNDRY AREAS, OR SIMILAR ROOMS OR AREAS SHALL BE PROTECTED BY A LISTED COMBINATION AFCI BREAKER.

TYPICAL LOAD CENTER SCHEDULE

Designation: 503 | MAINS: 150A | TYPE: 1 | O.C. DEVICE: M.L.O. | VOLTAGE: 120/208-1Ø-3W | MIN. AIC RATING: 10,000 | LOCATION: SEE PLANS | SUPPLY: SEE ONE-LINE | MOUNTING: RECESSED | Single: x | Double:

CKT	POLE	TRIP	WIRE	GND	C	LOAD	KVA Ø A	KVA Ø B	LOAD	C	GND	WIRE	TRIP	POLE	CKT
1	1	20	12	12	**	REFRIGERATOR	1.00	0.18	COUNTERTOP RECEPTACLES	**	12	12	20	1	2
3	1	20	12	12	**	COUNTERTOP RECEPTACLES		0.18	4.00 RANGE	**	10	8	50	2	4
5	1	20	12	12	**	BATHROOM GFI	0.18	4.00						/	6
7	1	20	12	12	**	MICROWAVE		1.00	1.08 BEDROOM RECEPTACLES	**	12	12	20	1	8
9	1	20	12	12	**	BEDROOM RECEPTACLES	1.08	1.20	DISHWASHER	**	12	12	20	1	10
11	1	20	12	12	**	RECEPTACLES		1.44	1.20				20	1	12
13	1	20	12	12	**	SPACE			SPACE						14
15						SPACE			SPACE						16
17						SPACE			SPACE						18
19	2	45	8	10	**	AH-B HEAT		3.60	SPACE						20
21	/						3.60		SPACE						22
23	2	15	14	14	**	AH-B		0.50	SPACE						24
25	/						0.50	2.25	WH-1	**	10	10	30	2	26
27	2	20	12	12	**	HP-B		1.35	2.25					/	28
29	/						1.35	0.50	LIGHTING	**	14	14	15	1	30

TOTAL/PHASE: 15.84 | 16.60

*** PROVIDE LOCKED BREAKER**
**** METAL CLAD (MC) OR CONDUCTORS IN CONDUIT SHALL BE USED WHERE SUBJECT TO PHYSICAL DAMAGE. NON-METALLIC (NM) CAN BE USED IN CONCELED PLACES AND NOT SUBJECT TO PHYSICAL DAMAGE.**

CONNECTED LOAD 32.44 (kVA)
DEMAND LOAD @ 0.80 25.95 (kVA)
DEMAND 124.77 (A)

ALL 120V-1Ø CIRCUITS SHALL BE AFCI-PROTECTED PER NEC ARTICLE 210.12. PROVIDE AFCI PROTECTION AT THE CIRCUIT BREAKER LEVEL. ALL 120V-1Ø, 15- AND 20-AMPERE BRANCH CIRCUITS SUPPLYING OUTLETS OR DEVICES INSTALLED IN DWELLING UNIT KITCHENS, FAMILY ROOMS, DINING ROOMS, LIVING ROOMS, PARLORS, LIBRARIES, DENS, BEDROOMS, SUNROOMS, RECREATION ROOMS, CLOSETS, HALLWAYS, LAUNDRY AREAS, OR SIMILAR ROOMS OR AREAS SHALL BE PROTECTED BY A LISTED COMBINATION AFCI BREAKER.

TYPICAL LOAD CENTER SCHEDULE

Designation: 504 | MAINS: 150A | TYPE: 1 | O.C. DEVICE: M.L.O. | VOLTAGE: 120/208-1Ø-3W | MIN. AIC RATING: 10,000 | LOCATION: SEE PLANS | SUPPLY: SEE ONE-LINE | MOUNTING: RECESSED | Single: x | Double:

CKT	POLE	TRIP	WIRE	GND	C	LOAD	KVA Ø A	KVA Ø B	LOAD	C	GND	WIRE	TRIP	POLE	CKT
1	1	20	12	12	**	REFRIGERATOR	1.00	0.18	COUNTERTOP RECEPTACLES	**	12	12	20	1	2
3	1	20	12	12	**	COUNTERTOP RECEPTACLES		0.18	4.00 RANGE	**	10	8	50	2	4
5	1	20	12	12	**	BATHROOM GFI	0.18	4.00						/	6
7	1	20	12	12	**	MICROWAVE		1.00	0.90 BEDROOM RECEPTACLES	**	12	12	20	1	8
9	1	20	12	12	**	BEDROOM RECEPTACLES	0.90	1.20	DISHWASHER	**	12	12	20	1	10
11	1	20	12	12	**	RECEPTACLES		1.98	1.20				20	1	12
13	1	20	12	12	**	RECEPTACLES	1.44		SPACE						14
15						SPACE			SPACE						16
17						SPACE			SPACE						18
19	2	45	8	10	**	AH-C HEAT		3.60	SPACE						20
21	/						3.60		SPACE						22
23	2	15	14	14	**	AH-C		0.50	SPACE						24
25	/						0.50	2.25	WH-1	**	10	10	30	2	26
27	2	25	10	10	**	HP-C		1.66	2.25					/	28
29	/						1.66	0.50	LIGHTING	**	14	14	15	1	30

TOTAL/PHASE: 17.41 | 17.27

*** PROVIDE LOCKED BREAKER**
**** METAL CLAD (MC) OR CONDUCTORS IN CONDUIT SHALL BE USED WHERE SUBJECT TO PHYSICAL DAMAGE. NON-METALLIC (NM) CAN BE USED IN CONCELED PLACES AND NOT SUBJECT TO PHYSICAL DAMAGE.**

CONNECTED LOAD 34.68 (kVA)
DEMAND LOAD @ 0.80 27.74 (kVA)
DEMAND 133.38 (A)

ALL 120V-1Ø CIRCUITS SHALL BE AFCI-PROTECTED PER NEC ARTICLE 210.12. PROVIDE AFCI PROTECTION AT THE CIRCUIT BREAKER LEVEL. ALL 120V-1Ø, 15- AND 20-AMPERE BRANCH CIRCUITS SUPPLYING OUTLETS OR DEVICES INSTALLED IN DWELLING UNIT KITCHENS, FAMILY ROOMS, DINING ROOMS, LIVING ROOMS, PARLORS, LIBRARIES, DENS, BEDROOMS, SUNROOMS, RECREATION ROOMS, CLOSETS, HALLWAYS, LAUNDRY AREAS, OR SIMILAR ROOMS OR AREAS SHALL BE PROTECTED BY A LISTED COMBINATION AFCI BREAKER.

TYPICAL LOAD CENTER SCHEDULE

Designation: 505 | MAINS: 150A | TYPE: 1 | O.C. DEVICE: M.L.O. | VOLTAGE: 120/208-1Ø-3W | MIN. AIC RATING: 10,000 | LOCATION: SEE PLANS | SUPPLY: SEE ONE-LINE | MOUNTING: RECESSED | Single: x | Double:

CKT	POLE	TRIP	WIRE	GND	C	LOAD	KVA Ø A	KVA Ø B	LOAD	C	GND	WIRE	TRIP	POLE	CKT
1	1	20	12	12	**	REFRIGERATOR	1.00	0.18	COUNTERTOP RECEPTACLES	**	12	12	20	1	2
3	1	20	12	12	**	COUNTERTOP RECEPTACLES		0.18	4.00 RANGE	**	10	8	50	2	4
5	1	20	12	12	**	BATHROOM GFI	0.18	4.00						/	6
7	1	20	12	12	**	MICROWAVE		1.00	0.72 BEDROOM RECEPTACLES	**	12	12	20	1	8
9	1	20	12	12	**	BEDROOM RECEPTACLES	0.72	1.20	DISHWASHER	**	12	12	20	1	10
11	1	20	12	12	**	RECEPTACLES		1.08	1.20				20	1	12
13	1	20	12	12	**	RECEPTACLES	1.08		SPACE						14
15						SPACE			SPACE						16
17						SPACE			SPACE						18
19	2	45	8	10	**	AH-B HEAT		3.60	SPACE						20
21	/						3.60		SPACE						22
23	2	15	14	14	**	AH-B		0.50	SPACE						24
25	/						0.50	2.25	WH-1	**	10	10	30	2	26
27	2	20	12	12	**	HP-B		1.35	2.25					/	28
29	/						1.35	0.50	LIGHTING	**	14	14	15	1	30

TOTAL/PHASE: 16.56 | 15.88

*** PROVIDE LOCKED BREAKER**
**** METAL CLAD (MC) OR CONDUCTORS IN CONDUIT SHALL BE USED WHERE SUBJECT TO PHYSICAL DAMAGE. NON-METALLIC (NM) CAN BE USED IN CONCELED PLACES AND NOT SUBJECT TO PHYSICAL DAMAGE.**

CONNECTED LOAD 32.44 (kVA)
DEMAND LOAD @ 0.80 25.95 (kVA)
DEMAND 124.77 (A)

ALL 120V-1Ø CIRCUITS SHALL BE AFCI-PROTECTED PER NEC ARTICLE 210.12. PROVIDE AFCI PROTECTION AT THE CIRCUIT BREAKER LEVEL. ALL 120V-1Ø, 15- AND 20-AMPERE BRANCH CIRCUITS SUPPLYING OUTLETS OR DEVICES INSTALLED IN DWELLING UNIT KITCHENS, FAMILY ROOMS, DINING ROOMS, LIVING ROOMS, PARLORS, LIBRARIES, DENS, BEDROOMS, SUNROOMS, RECREATION ROOMS, CLOSETS, HALLWAYS, LAUNDRY AREAS, OR SIMILAR ROOMS OR AREAS SHALL BE PROTECTED BY A LISTED COMBINATION AFCI BREAKER.

TYPICAL LOAD CENTER SCHEDULE

Designation: 506 | MAINS: 150A | TYPE: 1 | O.C. DEVICE: M.L.O. | VOLTAGE: 120/208-1Ø-3W | MIN. AIC RATING: 10,000 | LOCATION: SEE PLANS | SUPPLY: SEE ONE-LINE | MOUNTING: RECESSED | Single: x | Double:

CKT	POLE	TRIP	WIRE	GND	C	LOAD	KVA Ø A	KVA Ø B	LOAD	C	GND	WIRE	TRIP	POLE	CKT
1	1	20	12	12	**	REFRIGERATOR	1.00	0.18	COUNTERTOP RECEPTACLES	**	12	12	20	1	2
3	1	20	12	12	**	COUNTERTOP RECEPTACLES		0.18	4.00 RANGE	**	10	8	50	2	4
5	1	20	12	12	**	BATHROOM GFI	0.18	4.00						/	6
7	1	20	12	12	**	MICROWAVE		1.00	1.44 BEDROOM RECEPTACLES	**	12	12	20	1	8
9	1	20	12	12	**	BEDROOM RECEPTACLES	0.90	1.20	DISHWASHER	**	12	12	20	1	10
11	1	20	12	12	**	RECEPTACLES		1.08	1.20				20	1	12
13	1	20	12	12	**	RECEPTACLES	0.90		SPACE						14
15						SPACE			SPACE						16
17						SPACE			SPACE						18
19	2	45	8	10	**	AH-C HEAT		3.60	SPACE						20
21	/						3.60		SPACE						22
23	2	15	14	14	**	AH-C		0.50	SPACE						24
25	/						0.50	2.25	WH-1	**	10	10	30	2	26
27	2	25	10	10	**	HP-C		1.66	2.25					/	28
29	/						1.66	0.50	LIGHTING	**	14	14	15	1	30

TOTAL/PHASE: 16.87 | 16.91

*** PROVIDE LOCKED BREAKER**
**** METAL CLAD (MC) OR CONDUCTORS IN CONDUIT SHALL BE USED WHERE SUBJECT TO PHYSICAL DAMAGE. NON-METALLIC (NM) CAN BE USED IN CONCELED PLACES AND NOT SUBJECT TO PHYSICAL DAMAGE.**

CONNECTED LOAD 33.78 (kVA)
DEMAND LOAD @ 0.80 27.02 (kVA)
DEMAND 129.92 (A)

ALL 120V-1Ø CIRCUITS SHALL BE AFCI-PROTECTED PER NEC ARTICLE 210.12. PROVIDE AFCI PROTECTION AT THE CIRCUIT BREAKER LEVEL. ALL 120V-1Ø, 15- AND 20-AMPERE BRANCH CIRCUITS SUPPLYING OUTLETS OR DEVICES INSTALLED IN DWELLING UNIT KITCHENS, FAMILY ROOMS, DINING ROOMS, LIVING ROOMS, PARLORS, LIBRARIES, DENS, BEDROOMS, SUNROOMS, RECREATION ROOMS, CLOSETS, HALLWAYS, LAUNDRY AREAS, OR SIMILAR ROOMS OR AREAS SHALL BE PROTECTED BY A LISTED COMBINATION AFCI BREAKER.

TYPICAL LOAD CENTER SCHEDULE

Designation: 507 | MAINS: 150A | TYPE: 1 | O.C. DEVICE: M.L.O. | VOLTAGE: 120/208-1Ø-3W | MIN. AIC RATING: 10,000 | LOCATION: SEE PLANS | SUPPLY: SEE ONE-LINE | MOUNTING: RECESSED | Single: x | Double:

CKT	POLE	TRIP	WIRE	GND	C	LOAD	KVA Ø A	KVA Ø B	LOAD	C	GND	WIRE	TRIP	POLE	CKT
1	1	20	12	12	**	REFRIGERATOR	1.00	0.18	COUNTERTOP RECEPTACLES	**	12	12	20	1	2
3	1	20	12	12	**	COUNTERTOP RECEPTACLES		0.18	4.00 RANGE	**	10	8	50	2	4
5	1	20	12	12	**	BATHROOM GFI	0.18	4.00						/	6
7	1	20	12	12	**	MICROWAVE		1.00	0.72 BEDROOM RECEPTACLES	**	12	12	20	1	8
9	1	20	12	12	**	BEDROOM RECEPTACLES	0.72	1.20	DISHWASHER	**	12	12	20	1	10
11	1	20	12	12	**	RECEPTACLES		1.26	1.20				20	1	12
13	1	20	12	12	**	RECEPTACLES	0.90		SPACE						14
15						SPACE			SPACE						16
17						SPACE			SPACE						18
19	2	45	8	10	**	AH-B HEAT		3.60	SPACE						20
21	/						3.60		SPACE						22
23	2	15	14	14	**	AH-B		0.50	SPACE						24
25	/						0.50	2.25	WH-1	**	10	10	30	2	26
27	2	20	12	12	**	HP-B		1.35	2.25					/	28
29	/						1.35	0.50	LIGHTING	**	14	14	15	1	30

TOTAL/PHASE: 16.38 | 16.06

*** PROVIDE LOCKED BREAKER**
**** METAL CLAD (MC) OR CONDUCTORS IN CONDUIT SHALL BE USED WHERE SUBJECT TO PHYSICAL DAMAGE. NON-METALLIC (NM) CAN BE USED IN CONCELED PLACES AND NOT SUBJECT TO PHYSICAL DAMAGE.**

CONNECTED LOAD 32.44 (kVA)
DEMAND LOAD @ 0.80 25.95 (kVA)
DEMAND 124.77 (A)

ALL 120V-1Ø CIRCUITS SHALL BE AFCI-PROTECTED PER NEC ARTICLE 210.12. PROVIDE AFCI PROTECTION AT THE CIRCUIT BREAKER LEVEL. ALL 120V-1Ø, 15- AND 20-AMPERE BRANCH CIRCUITS SUPPLYING OUTLETS OR DEVICES INSTALLED IN DWELLING UNIT KITCHENS, FAMILY ROOMS, DINING ROOMS, LIVING ROOMS, PARLORS, LIBRARIES, DENS, BEDROOMS, SUNROOMS, RECREATION ROOMS, CLOSETS, HALLWAYS, LAUNDRY AREAS, OR SIMILAR ROOMS OR AREAS SHALL BE PROTECTED BY A LISTED COMBINATION AFCI BREAKER.

TYPICAL LOAD CENTER SCHEDULE

Designation: 601 | MAINS: 150A | TYPE: 1 | O.C. DEVICE: M.L.O. | VOLTAGE: 120/208-1Ø-3W | MIN. AIC RATING: 10,000 | LOCATION: SEE PLANS | SUPPLY: SEE ONE-LINE | MOUNTING: RECESSED | Single: x | Double:

CKT	POLE	TRIP	WIRE	GND	C	LOAD	KVA Ø A	KVA Ø B	LOAD	C	GND	WIRE	TRIP	POLE	CKT
1	1	20	12	12	**	REFRIGERATOR	1.00	0.18	COUNTERTOP RECEPTACLES	**	12	12	20	1	2
3	1	20	12	12	**	COUNTERTOP RECEPTACLES		0.18	4.00 RANGE	**	10	8	50	2	4
5	1	20	12	12	**	BATHROOM GFI	0.18	4.00						/	6
7	1	20	12	12	**	MICROWAVE		1.00	0.90 BEDROOM RECEPTACLES	**	12	12	20	1	8
9	1	20	12	12	**	BEDROOM RECEPTACLES	0.72	1.20	DISHWASHER	**	12	12	20	1	10
11	1	20	12	12	**	RECEPTACLES		1.44	1.20				20	1	12
13						SPACE			SPACE						14
15						SPACE			SPACE						16
17						SPACE			SPACE						18
19	2	45	8	10	**	AH-C HEAT		3.60	SPACE						20
21	/						3.60		SPACE						22
23	2	15	14	14	**	AH-C		0.50	SPACE						24
25	/						0.50	2.25	WH-1	**	10	10	30	2	26
27	2	25	10	10	**	HP-C		1.66	2.25					/	28
29	/						1.66	0.50	LIGHTING	**	14	14	15	1	30

TOTAL/PHASE: 15.79 | 16.73

*** PROVIDE LOCKED BREAKER**
**** METAL CLAD (MC) OR CONDUCTORS IN CONDUIT SHALL BE USED WHERE SUBJECT TO PHYSICAL DAMAGE. NON-METALLIC (NM) CAN BE USED IN CONCELED PLACES AND NOT SUBJECT TO PHYSICAL DAMAGE.**

CONNECTED LOAD 32.52 (kVA)
DEMAND LOAD @ 0.80 26.02 (kVA)
DEMAND 125.08 (A)

ALL 120V-1Ø CIRCUITS SHALL BE AFCI-PROTECTED PER NEC ARTICLE 210.12. PROVIDE AFCI PROTECTION AT THE CIRCUIT BREAKER LEVEL. ALL 120V-1Ø, 15- AND 20-AMPERE BRANCH CIRCUITS SUPPLYING OUTLETS OR DEVICES INSTALLED IN DWELLING UNIT KITCHENS, FAMILY ROOMS, DINING ROOMS, LIVING ROOMS, PARLORS, LIBRARIES, DENS, BEDROOMS, SUNROOMS, RECREATION ROOMS, CLOSETS, HALLWAYS, LAUNDRY AREAS, OR SIMILAR ROOMS OR AREAS SHALL BE PROTECTED BY A LISTED COMBINATION AFCI BREAKER.

TYPICAL LOAD CENTER SCHEDULE

Designation: 602 | MAINS: 150A | TYPE: 1 | O.C. DEVICE: M.L.O. | VOLTAGE: 120/208-1Ø-3W | MIN. AIC RATING: 10,000 | LOCATION: SEE PLANS | SUPPLY: SEE ONE-LINE | MOUNTING: RECESSED | Single: x | Double:

CKT	POLE	TRIP	WIRE	GND	C	LOAD	KVA Ø A	KVA Ø B	LOAD	C	GND	WIRE	TRIP	POLE	CKT
1	1	20	12	12	**	REFRIGERATOR	1.00	0.18	COUNTERTOP RECEPTACLES	**	12	12	20	1	2
3	1	20	12	12	**	COUNTERTOP RECEPTACLES		0.36	4.00 RANGE	**	10	8	50	2	4
5	1	20	12	12	**	BATHROOM GFI	0.18	4.00						/	6
7	1	20	12	12	**	MICROWAVE		1.00	0.90 BEDROOM RECEPTACLES	**	12	12	20	1	8
9	1	20	12	12	**	BEDROOM RECEPTACLES	1.08	1.20	DISHWASHER	**	12	12	20	1	10
11	1	20	12	12	**	RECEPTACLES		1.44	1.20				20	1	12
13	1	20	12	12	**	KITCHEN RECEPTACLES	0.72		SPACE						14
15						SPACE			SPACE						16
17						SPACE			SPACE						18
19	2	40	8	10	**	AH-A HEAT		2.88	SPACE						20
21	/						2.88		SPACE						22
23	2	15	14	14	**	AH-A		0.50	SPACE						24
25	/						0.50	2.25	WH-1	**	10	10	30	2	26
27	2	20	12	12	**	HP-A		1.25	2.25					/	28
29	/						1.25	0.50	LIGHTING	**	14	14	15	1	30

TOTAL/PHASE: 15.74 | 15.78

*** PROVIDE LOCKED BREAKER**
**** METAL CLAD (MC) OR CONDUCTORS IN CONDUIT SHALL BE USED WHERE SUBJECT TO PHYSICAL DAMAGE. NON-METALLIC (NM) CAN BE USED IN CONCELED PLACES AND NOT SUBJECT TO PHYSICAL DAMAGE.**

CONNECTED LOAD 31.52 (kVA)
DEMAND LOAD @ 0.80 25.22 (kVA)
DEMAND 121.23 (A)

ALL 120V-1Ø CIRCUITS SHALL BE AFCI-PROTECTED PER NEC ARTICLE 210.12. PROVIDE AFCI PROTECTION AT THE CIRCUIT BREAKER LEVEL. ALL 120V-1Ø, 15- AND 20-AMPERE BRANCH CIRCUITS SUPPLYING OUTLETS OR DEVICES INSTALLED IN DWELLING UNIT KITCHENS, FAMILY ROOMS, DINING ROOMS, LIVING ROOMS, PARLORS, LIBRARIES, DENS, BEDROOMS, SUNROOMS, RECREATION ROOMS, CLOSETS, HALLWAYS, LAUNDRY AREAS, OR SIMILAR ROOMS OR AREAS SHALL BE PROTECTED BY A LISTED COMBINATION AFCI BREAKER.

TYPICAL LOAD CENTER SCHEDULE

Designation: 603 | MAINS: 150A | TYPE: 1 | O.C. DEVICE: M.L.O. | VOLTAGE: 120/208-1Ø-3W | MIN. AIC RATING: 10,000 | LOCATION: SEE PLANS | SUPPLY: SEE ONE-LINE | MOUNTING: RECESSED | Single: x | Double:

CKT	POLE	TRIP	WIRE	GND	C	LOAD	KVA Ø A	KVA Ø B	LOAD	C	GND	WIRE	TRIP	POLE	CKT
1	1	20	12	12	**	REFRIGERATOR	1.00	0.18	COUNTERTOP RECEPTACLES	**	12	12	20	1	2
3	1	20	12	12	**	COUNTERTOP RECEPTACLES		0.18	4.00 RANGE	**	10	8	50	2	4
5	1	20	12	12	**	BATHROOM GFI	0.18	4.00						/	6
7	1	20	12	12	**	MICROWAVE		1.00	1.08 BEDROOM RECEPTACLES	**	12	12	20	1	8
9	1	20	12	12	**	BEDROOM RECEPTACLES	1.08	1.20	DISHWASHER	**	12	12	20	1	10
11	1	20	12	12

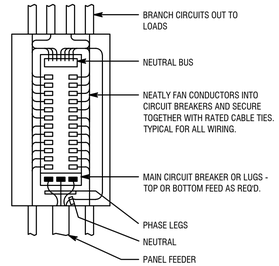

NOTES:
1. ALL WIRE AND CONDUIT SHALL BE CONCEALED IN WALLS, CEILING PLENUMS, BULKHEADS AND IN ROOF STRUCTURAL AREAS, U.O.N. THE E.C. SHALL COORDINATE FULLY WITH ALL OTHER TRADES TO INSTALL ALL CONDUIT AND WIRING IN THESE ASSOCIATED STRUCTURES. ANY OTHER MEANS OF PATHWAY SUGGESTED MUST FIRST BE APPROVED FROM THE ELECTRICAL ENGINEER BEFORE INSTALLATION CAN PROCEED.
2. ALL RACEWAYS AND MC CABLE SHALL BE RECTILINEAR TO BUILDING STRUCTURE AND SUPPORTED PER SPECIFICATIONS.
3. ALL CONDUCTORS SHALL BE COPPER.

1 / E-15 PANELBOARD INSTALLATION DETAIL
SCALE: NONE

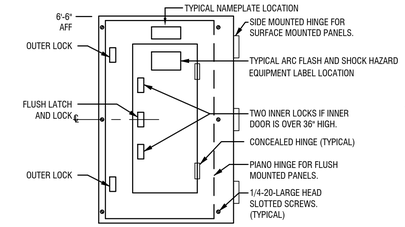

TYPICAL PANELBOARD ELEVATION

NOTES:
1. ALL BOLTS SHALL HAVE LARGE (3/8") ROUND HEAD. NO WASHERS ALLOWED.
2. PROVIDE UNISTRUT MOUNTING ARRANGEMENT DICTATED BY FIELD CONDITIONS. SECURELY FASTEN ALL SUPPORT POINTS INTO THE SLAB, WALL OR BEAM.
3. PROVIDE ARC FLASH AND SHOCK HAZARD EQUIPMENT LABELS PER THE LATEST REVISION OF NFPA 70E.

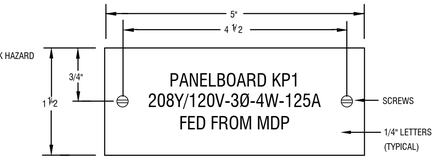

TYPICAL NAMEPLATE

NOTES:
1. LABEL ALL PANELBOARDS, TRANSFER SWITCHES, TRANSFORMERS, CONTROL PANELS, DISCONNECTS, ETC. GREATER THAN 60A, AND MINI SUBSTATIONS.
2. REFER TO SPECIFICATIONS FOR ADDITIONAL LABELING REQUIREMENTS.
3. NAMEPLATE TO BE 1/16" THICK BLACK BAKELITE PLASTIC WITH WHITE RECESSED ENGRAVED LETTERS.
4. SECURE NAMEPLATE TO SURFACES WITH (2) FLAT HEAD BRASS SCREWS. ADHESIVE CEMENT SHALL NOT BE ALLOWED.
5. NAMEPLATE INFORMATION SHALL INCLUDE NAME, VOLTAGE, AMPERAGE AND EQUIPMENT FED FROM.

2 / E-15 TYPICAL PANELBOARD ELEVATION AND LABELING DETAIL
SCALE: NONE

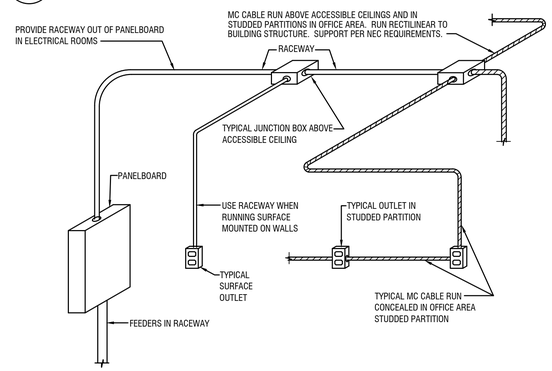

NOTES:

1. THIS DETAIL IS TYPICAL AND MEANT AS A BRIEF SUMMARY OF WIRING METHODS. COMPLY WITH ALL ADOPTED CODE REQUIREMENTS.
2. ALL CONDUIT SHALL BE CONCEALED ABOVE CEILINGS OR IN WALLS AND FLOORS, U.O.N.
3. BRANCH CIRCUITS SERVING UNFINISHED AREAS SHALL BE ALLOWED TO BE SURFACE-MOUNTED IN RACEWAY.

LOW-VOLTAGE ELECTRICAL POWER CONDUCTORS AND CABLES (600V AND LESS)

A. CONDUCTORS: COPPER, SINGLE ANNEALED STRANDED CONDUCTORS WITH AMPACITY OF NOT LESS THAN 98 PERCENT AT 20 DEGREES C COMPLYING WITH ASTM B 3 FOR BARE ANNEALED COPPER AND WITH ASTM B 8 FOR STRANDED CONDUCTORS.
B. CONDUCTOR INSULATION:

1. TYPE THHN AND TYPE THWN-2: COMPLY WITH UL 83.
2. TYPE XHHW-2: COMPLY WITH UL 44.
3. TYPE MC: COMPLY WITH UL 1569, INCLUDE INSULATED GROUND.

C. CONNECTORS AND SPLICES MANUFACTURERS: SUBJECT TO COMPLIANCE WITH REQUIREMENTS, AVAILABLE MANUFACTURERS OFFERING PRODUCTS THAT MAY BE INCORPORATED INTO THE WORK INCLUDE, BUT ARE NOT LIMITED TO, THE FOLLOWING: HUBBELL, OZ-GENDRY, 3M, OR APPROVED EQUAL

1. DESCRIPTION: FACTORY-FABRICATED CONNECTORS AND SPLICES OF SIZE, AMPACITY RATING, MATERIAL, TYPE, AND CLASS FOR APPLICATION AND SERVICE INDICATED.
2. ALL SPLICES SHALL BE COMPATIBLE WITH CONDUCTOR MATERIAL AND POSSESS EQUIVALENT OR BETTER MECHANICAL STRENGTH AND INSULATION RATINGS THAN UNSPLICED CONDUCTORS

3 / E-15 CONDUCTOR DESIGN INTENT
SCALE: NONE

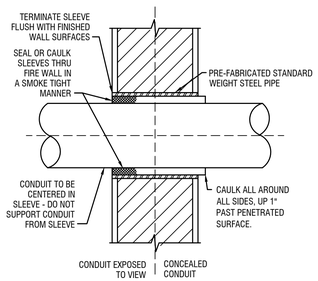

NOTES:
1. PROVIDE FIRESTOPPING AT ALL PENETRATIONS THROUGH RATED ASSEMBLIES IN A SMOKE-TIGHT MANNER AND TO MAINTAIN A UL 319 CLOSURE. FIRE RETARDING MATERIAL TO MAINTAIN RATING TO THAT OF SURFACE BEING PENETRATED.
2. PROVIDE PRE-FABRICATED, STANDARD WEIGHT, STEEL PIPE SLEEVAE. CONDUIT TO BE CENTERED IN SLEEVE. DO NOT SUPPORT CONDUIT FROM SLEEVE.
3. IN UNFINISHED AREAS, CAULK ALL AROUND ALL SIDES, UP 1" PAST PENETRATED SURFACE.
4. IN FINISHED AREAS, TERMINATE SLEEVE AND SEALANT FLUSH WITH WALL SURFACE.

4 / E-15 RATED PENETRATION DETAIL
SCALE: NONE

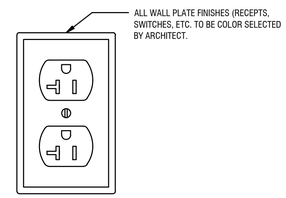

GENERAL NOTES:
1. ALL RECEPTACLES IN CUSTOMER FACING AREAS TO BE TAMPER RESISTANT.
2. ALL RECEPTACLES IN KITCHEN AREAS AND AS REQUIRED BY N.E.C. TO INCLUDE GFCI PROTECTION.
3. PROVIDE WIRING DEVICES, COMPONENTS, AND ACCESSORIES, LISTED AND LABELED AS DEFINED IN NFPA 70, BY A QUALIFIED TESTING AGENCY, AND MARKED FOR INTENDED LOCATION AND APPLICATION.
4. DUPLEX CONVENIENCE RECEPTACLES: 125 V, 20 A; COMPLY WITH NEMA WD 1, NEMA WD 6 CONFIGURATION 5-20R, UL 498, UL 943, AND FS W-C-596.
5. COMPLY WITH NECA 1, INCLUDING MOUNTING HEIGHTS LISTED IN THAT STANDARD, UNLESS OTHERWISE INDICATED.
6. FULLY COORDINATE INSTALLATION WITH OWNER AND ALL OTHER TRADES.

5 / E-15 TYPICAL WIRING DEVICE INSTALLATION DETAIL
SCALE: NONE

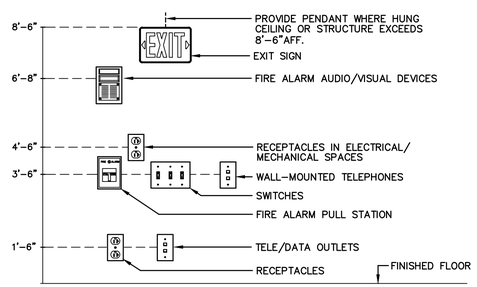

NOTES:
1. DEVICES SHALL BE INSTALLED ON A COMMON VERTICAL CENTERLINE WHEREVER POSSIBLE.
2. ELECTRICAL RECEPTACLES SHALL BE MOUNTED A MINIMUM OF 15 INCHES TO THE BOTTOM OF THE RECEPTACLE.
3. ELECTRICAL SWITCHES SHALL BE MOUNTED A MAXIMUM OF 48 INCHES TO THE TOP OF THE SWITCH.
4. COUNTERTOP ELECTRICAL RECEPTACLES SHALL BE MOUNTED A MAXIMUM OF 44 INCHES TO THE TOP OF THE RECEPTACLE.
5. CIRCUIT BREAKERS, DISCONNECT SWITCHES, ETC. SHALL BE INSTALLED SO THAT THE CENTER OF THE GRIP OF THE OPERATING HANDLE IN ITS HIGHEST POSITION IS NOT MORE THAN 6'-7" A.F.F.
6. MOUNT VISIBLE FIRE ALARM DEVICES WITH THE LENS OF THE STROBE NOT LESS THAN 80 IN AND NOT GREATER THAN 96 IN A.F.F. WALL-MOUNTED VISIBLE FIRE ALARM DEVICES SHALL NOT BE WITHIN 6 IN OF THE CEILING.
7. MOUNT EXIT SIGNS ABOVE DOORS WITH 2" BETWEEN BOTTOM OF EXIT SIGN AND TOP OF DOOR.
8. THE MOUNTING HEIGHTS SHOWN ARE GENERALLY DIMENSIONED TO THE MID-LINE OF A GIVEN DEVICE. EXACT DEVICE MOUNTING HEIGHTS SHALL BE WITHIN THE SPECIFIC REACH LIMITS SPECIFIED IN THE LATEST REVISION OF THE ADA GUIDELINES AND THE LATEST REVISION OF ICC/ANSI A217.1, SPECIFICALLY FIRE ALARM DEVICES, CONTROLS, OPERATING MECHANISMS AND HARDWARE, INCLUDING RECEPTACLES AND SWITCHES THAT CONTROL LIGHTING, VENTILATION, ETC.
9. THIS DETAIL IS MEANT AS A GENERAL GUIDE. ALL FINAL MOUNTING HEIGHTS SHALL BE INSTALLED PER ARCHITECTURAL DRAWINGS AND ADOPTED CODES.

6 / E-15 TYPICAL DEVICE MOUNTING HEIGHTS
SCALE: NONE

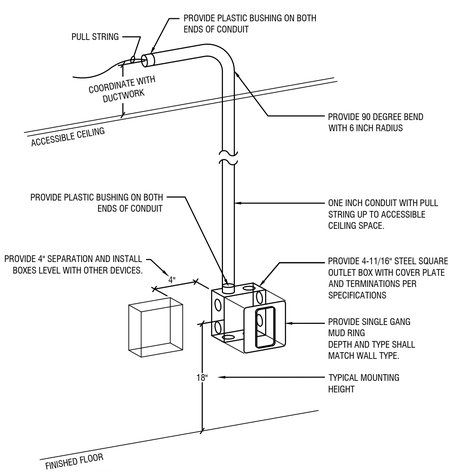

7 / E-15 TYPICAL TELE/DATA BOX INSTALLATION DETAIL
SCALE: N.T.S.

Client:
16-22 Union Street - Apartment Building
Client: Empire Property Construction
16-22 Union St.
Wilkes-Barre, Pa 18701

Consultants:
DMG
design management group
consulting engineers
570 299 7520
dmgeng.com

CAM architect
CAM architect, LLC
ARCHITECTS | PLANNERS
606 North Main St. Wilkes-Barre, PA 18705
T | 570| 824.3320
F | 570| 606.4966
www.camarchus.com
© 2026 CAM ARCHITECT

Seals:
PRELIMINARY - NOT FOR CONSTRUCTION
THIS DOCUMENT IS FOR REVIEW AND COORDINATION PURPOSES ONLY AND IS NOT INTENDED FOR CONSTRUCTION OR BIDDING. DO NOT START CONSTRUCTION WITHOUT A SEALED SET OF CONSTRUCTION DOCUMENTS FROM THE ARCHITECT.

Revisions | Issues
No: Date:

Phase:
PERMIT/PRICING

Project: Apartment Building
Date: 06/15/2026
Drawn: DP Checked: KJS
Scale: AS NOTED
Sheet:

ELECTRICAL DETAILS
E-15

PLUMBING ABBREVIATIONS

ABV	ABOVE
ABV CLG	ABOVE CEILING
AD	AREA DRAIN
AFF	ABOVE FINISHED FLOOR
AFG	ABOVE FINISHED GRADE
AP	ACCESS PANEL
AV	ACID VENT
AW	ACID WASTE
BLW	BELOW
BF	BELOW FINISHED FLOOR
BFG	BELOW FINISHED GRADE
BFP	BACKFLOW PREVENTER
BOJ	BOTTOM OF JOIST
BOP	BOTTOM OF PIPE
BOS	BOTTOM OF STEEL
BTUB	BATHTUB
BTUH	BRITISH THERMAL UNITS PER HOUR
BWV	BACKWATER VALVE
CB	CATCH BASIN
CD	CONDENSATE DRAIN
CFH	CUBIC FEET PER HOUR
CIP	CAST IRON PIPE
CLG	CEILING
CO	CLEANOUT
CONC	CONCRETE
CONN	CONNECT
CONT	CONTINUATION
CS	COUNTERTOP SINK
CW	DOMESTIC COLD WATER
C	CENTER LINE
DEPT	DEPARTMENT
DIP	DUCTILE IRON PIPE
DF	DRINKING FOUNTAIN
DFU	DRAINAGE FIXTURE UNIT
DIA	DIAMETER
DN	DOWN
EC	ELECTRICAL CONTRACTOR
EL	ELEVATION
EWC	ELECTRICAL WATER COOLER
EX	EXISTING
FCO	FLOOR CLEANOUT
FD	FLOOR DRAIN
FFE	FINISHED FLOOR ELEVATIONS
FHC	FIRE HOSE CABINET
FL	FLOOR
GC	GENERAL CONTRACTOR
GH	GROUND HYDRANT
GI	GREASE INTERCEPTOR LINE
GPM	GALLON PER MINUTE
GW	GRAYWATER
GW-IR	GRAYWATER-IRRIGATION
H	HANDICAPPED
HB	HOSE BIBB
HE	HOSE END
HC	HEATING CONTRACTOR
HP	HORSEPOWER
HW	DOMESTIC HOT WATER
HWH	HOT WATER HEATER
HWR	DOMESTIC HOT WATER RETURN
ID	INSIDE DIAMETER
INV	INVERT
IW	INDIRECT WASTE
KW	KILOWATT
LAV	LAVATORY
LM	LAUNDRY MACHINE
MAX	MAXIMUM
MB	MOP BASIN
MBH	THOUSAND BTU'S PER HOUR
MC	MECHANICAL CONTRACTOR
MH	MANHOLE
MIN	MINIMUM
N/C	NORMALLY CLOSED
NFHB	NON-FREEZE HOSE BIBB
NIC	NOT IN CONTRACT
N/O	NORMALLY OPEN
OD	OVERFLOW DRAIN
OSD	OPEN SITE DRAIN
OS&Y	OUTSIDE STEM AND YOKE
PC	PLUMBING CONTRACTOR
PD	PUMPED DISCHARGE LINE
PRV	PRESSURE REDUCING VALVE
PSI	PER SQUARE INCH
PVC	POLY VINYL CHLORIDE
R	RISER
RD	ROOF DRAIN
RL	RAINWATER LEADER
RPM	REVOLUTION PER MINUTE
RWC	RAINWATER CONDUCTOR
S	SOIL LINE/STACK
SAN	SANITARY
SD	SHOWER DRAIN
SH	SHOWER
SOV	SHUT-OFF VALVE
SP	SPRINKLER
SS	SERVICE SINK
SW	STORM WATER
TEMP	TEMPERATURE
TMV	THERMOSTATIC MIXING VALVE
TYP	TYPICAL
UR	URINAL
V	VENT
VTR	VENT THRU ROOF
W	WASTE
w/	WITH
W/O	WITHOUT
WC	WATER CLOSET
WCO	WALL CLAENOUT
WF	WASH FOUNTAIN
WH	WALL HYDRANT

GRAPHIC CONVENTIONS

XX / X	EQUIPMENT TAG, TOP INDICATES EQUIPMENT DESIGNATION, BOTTOM INDICATES EQUIPMENT NUMBER
XX / XX	PLAN CALLOUT, TOP INDICATES CALLOUT REFERENCE NUMBER, BOTTOM INDICATES SHEET NUMBER
XX / XX	ELEVATION CALLOUT, TOP INDICATES CALLOUT REFERENCE NUMBER, BOTTOM INDICATES SHEET NUMBER
XX / XX	SECTION CALLOUT, TOP INDICATES CALLOUT REFERENCE NUMBER, BOTTOM INDICATES SHEET NUMBER
	REVISION AREA
X	REVISION TAG
X	CONSTRUCTION KEYED NOTE TAG
X	DEMOLITION KEYED NOTE TAG
	POINT OF CONNECTION BETWEEN NEW AND EXISTING
	LIMIT OF DEMOLITION BETWEEN EXISTING TO REMAIN AND TO BE REMOVED

COORDINATION NOTE

THE HVAC, PLUMBING, AND ELECTRICAL CONTRACTORS SHALL BE AWARE THAT THE CEILING HEIGHTS, SOFFITS AND SPACE CONDITIONS ON THIS PROJECT ARE CRITICAL AND SPACE ALLOCATION MUST BE COORDINATED BETWEEN ALL TRADES AND MAINTAINED. EACH CONTRACTOR OR TRADE SHALL REFER TO THE STRUCTURAL AND ARCHITECTURAL DRAWINGS IN ADDITION TO THE HVAC, PLUMBING, AND ELECTRICAL DRAWINGS TO DETERMINE ACCEPTABLE LAYERING OF ALL EQUIPMENT.

PLUMBING GENERAL NOTES

GENERAL PLUMBING NOTES:

1. PROVIDE ALL MATERIALS AND EQUIPMENT AND PERFORM ALL LABOR REQUIRED TO INSTALL COMPLETE AND OPERABLE PLUMBING SYSTEM AS INDICATED ON THE DRAWINGS, AS SPECIFIED AND AS REQUIRED BY CODE.
2. THE DRAWINGS ARE GENERALLY DIAGRAMMATIC AND INDICATIVE OF WORK TO BE PERFORMED. THE DRAWINGS ARE NOT INTENDED TO SHOW EVERY PIPE, FITTING, VALVE OR APPURTENANCE REQUIRED FOR A COMPLETE INSTALLATION. DO NOT SCALE LOCATION DIMENSIONS FROM THESE DRAWINGS. DRAWINGS ARE NOT TO BE SCALED FOR THE ACCURATE CUTTING OF PIPE OR ITS EXACT LOCATION. BEFORE ANY PIPING IS INSTALLED, CONFER WITH ALL OTHER CONTRACTORS IN ORDER TO ESTABLISH THE LOCATION OF THEIR PIPING, CONDUIT, DUCTWORK, GRILLES, FOUNDATIONS, STRUCTURAL STEEL, LIGHTING FIXTURES AND OTHER EQUIPMENT SO AS TO AVOID INTERFERENCE. FAILURE TO COORDINATE SHALL NOT RESULT IN ANY ADDITIONAL EXPENSES TO THE OWNER AND ENGINEER.
3. THE CONTRACTOR IS RESPONSIBLE FOR CHECKING AND VERIFYING ALL CONDITIONS AND DIMENSIONS AND FOR COORDINATION OF THEIR WORK WITH THAT OF ALL OTHER TRADES. PERFORM WORK IN A NEAT, ORDERLY MANNER AND WITH THE LEAST POSSIBLE INTERFERENCES.
4. WORK SHALL CONFORM TO OR MEET THE REQUIREMENTS OF THE MOST CURRENT PENNSYLVANIA EDITION OF:
   - A. INTERNATIONAL PLUMBING CODE; 2018
   - B. INTERNATIONAL ENERGY CONSERVATION CODE; 2018 IECC
   - C. INTERNATIONAL BUILDING CODE; 2018 IBC
   - D. NEC (NFPA 70); 2017
   - E. INTERNATIONAL FUEL GAS CODE; 2018 IFGC
   - F. ALL FEDERAL, STATE AND LOCAL CODES AND ORDINANCES
5. CONTRACTOR SHALL CONFORM TO NSF 61 (605.4, 606.5, 702.1, 702.2, 703.3) FOR THE WATER DISTRIBUTION PIPING AND SANITARY DRAINAGE.
6. VALVES AND FITTINGS UTILIZED IN THE WATER SUPPLY SYSTEM SHALL HAVE A MAXIMUM LEAD CONTENT OF 8% LEAD. LEAD FREE SOLDER THAT CONFORMS ASTM B32 AND FLUX THAT CONFORMS TO ASTM B 828. LEAD FREE SHALL MEAN A CHEMICAL COMPOSITION EQUAL TO OR LESS THAN 0.2% LEAD. PIPE, PIPE FITTINGS, JOINTS, VALVES, FAUCETS AND FIXTURE FITTINGS UTILIZED TO SUPPLY WATER FOR DRINKING OR COOKING PURPOSES SHALL COMPLY WITH NSF 372 AND SHALL HAVE A WEIGHTED AVERAGED LEAD CONTENT OF 0.25 PERCENT OR LESS.
7. CONTRACTOR SHALL PROTECT THE PIPING FROM STRESS AND STRAIN. CONTRACTOR SHALL PROTECT THE IN-SLAB PIPING FORM CORROSION AND STRESS/STRAIN TO CONFORM TO THE INTERNATIONAL PLUMBING CODE. REFER TO PIPING SUPPORT SPACING SCHEDULE OF THE CODE.
8. ALL MATERIALS, EQUIPMENT AND DEVICES SHALL, AS A MINIMUM, MEET THE REQUIREMENTS OF UL WHERE UL REQUIREMENTS ARE ESTABLISHED FOR THOSE ITEMS. ALL ITEMS SHALL BE CLASSIFIED BY UL AS SUITABLE FOR THE PURPOSE OF THE CODE.
9. ALL HOT WATER HEATERS TO CONFORM TO REQUIREMENTS OF INTERNATIONAL ENERGY CONSERVATION CODE - IECC (SECTION C404).
10. WHERE PIPES PENETRATE FIRE RATED OR SMOKE RATED BARRIERS (WALLS, FLOORS AND CEILINGS). SEAL PENETRATIONS IN ACCORDANCE WITH NFPA 90A WITH UL LISTED FIRE STOPPING SYSTEM.
11. REFER TO SCHEMATIC DIAGRAMS FOR ALL PIPE SIZES AND PIPING LOCATIONS NOT SHOWN ON THE PLANS UNLESS NOTED OTHERWISE ON THE DRAWINGS. ALL WASTE PIPING BELOW GRADE SHALL BE A MINIMUM OF 2" IN SIZE.
12. INSTALL CLEANOUTS (TEST TEES) AT THE BASE OF ALL SOIL STACKS AND RAINWATER CONDUCTORS.
13. COORDINATE LOCATION OF PIPING ABOVE CEILING WITH ELECTRICAL PANELS BY ELECTRICAL CONTRACTOR. DO NOT INSTALL PIPING IN DEDICATED SPACE FOR ELECTRIC PANEL.
14. ANY REFERENCE TO "GC" OR "GENERAL CONTRACTOR" SHALL MEAN THE APPROPRIATE GENERAL TRADES CONTRACTOR, AS DEFINED IN DIVISION 1. THIS REFERENCE IS NOT TO OUTLINE WORK AMONG GENERAL TRADES CONTRACTOR, BUT TO NOTE WHAT WORK IS NOT A PART OF THE PLUMBING CONTRACT.
15. ALL EQUIPMENT AND MATERIALS INCORPORATED IN THIS WORK SHALL BE NEW UNLESS NOTED OTHERWISE AND SHALL BE CURRENT PRODUCTS BY MANUFACTURERS REGULARLY ENGAGED IN THE PRODUCTION OF SUCH PRODUCTS.
16. ALL FACTORY APPLIED COATINGS AND FINISHES SHALL BE PROVIDED WITHOUT RUST, SCRATCHES OR DENTS.
17. CONTRACTOR SHALL OBTAIN AND PAY FOR ALL PERMITS, APPROVALS AND INSPECTIONS AS REQUIRED TO COMPLETE INSTALLATIONS INDICATED ON THESE DRAWINGS.
18. PROVIDE OWNER WITH CERTIFICATES OF FINAL INSPECTION AND ACCEPTANCE FROM THE AUTHORITY HAVING JURISDICTION.
19. PROVIDE OWNER WITH TWO (2) SETS OF O&M (OPERATING AND MAINTENANCE) MANUALS WHICH SHALL INCLUDE:
   - A. ALL PRODUCT, EQUIPMENT AND FIXTURE DESCRIPTIONS AND SUBMITTAL DATA INCLUDING PARTS ORDERING INFORMATION.
   - B. INSTALLATION INSTRUCTIONS.
   - C. OPERATING AND MAINTENANCE INSTRUCTIONS.
   - D. WARRANTIES AND GUARANTEES.
   - E. PROVIDE ALL DATA IN A BOUND 8-1/2"x11" 3-RING BINDER FOR TEST AND BALANCE REPORTS.

COORDINATION REQUIREMENTS

1. COORDINATE LOCATIONS AND INSTALLATION OF PLUMBING WORK WITH OTHER TRADES TO AVOID CONFLICTS AND INTERFERENCES, MODIFICATIONS DUE TO FIELD CONDITIONS SHALL BE COMPLETELY RESOLVED BY CONTRACTOR IN ACCORDANCE WITH RECOMMENDATIONS OF THE CONSTRUCTION MANAGER OR GENERAL CONTRACTOR.
2. COORDINATE FINAL LOCATIONS OF PLUMBING EQUIPMENT WITH ARCHITECTURAL PLANS.
3. PROVIDE TO THE CONSTRUCTION MANAGER, GENERAL CONTRACTOR AND ALL OTHER TRADES DIMENSIONED LOCATIONS AND SIZES OF ALL REQUIRED FLOOR, WALL AND ROOF OPENINGS. PROVIDE FOR INSTALLATION OF SLEEVES AND FRAMING AS REQUIRED.

PLUMBING INSTALLATION REQUIREMENTS:

1. INSTALL ALL EQUIPMENT AND MATERIAL IN ACCORDANCE WITH MANUFACTURER PRINTED INSTALLATION INSTRUCTIONS AND RECOMMENDATIONS. MAINTAIN CLEARANCES FOR CLEARANCE ACCESS TO MAINTAIN AND SERVICE EQUIPMENT, VALVES AND CONTROLS.
2. ALL INSTALLATION AND WORK SHALL BE PERFORMED IN A NEAT, WORKMANLIKE MANNER SO AS NOT TO DAMAGE ANY SURFACES, EQUIPMENT OR MATERIALS.
3. ALL EQUIPMENT AND PIPING SHALL BE SUPPORTED IN AN APPROVED MANNER FROM THE BUILDING STRUCTURE AND INCLUDE HANGERS AND RESTRAINTS IN ACCORDANCE WITH ALL APPLICABLE CODES AND SEISMIC RESTRAINT REQUIREMENTS. PLUMBING CONTRACTOR SHALL PROVIDE ALL ROOF OPENINGS, FLASHING, AUXILIARY STEEL, THREADED RODS, ETC., TO SUPPORT EQUIPMENT ON OR FROM THE STRUCTURE.
4. PROVIDE PIPE ESCUTCHEONS AT ALL EXPOSED PENETRATIONS OF FLOORS, WALLS AND CEILINGS.
5. PROVIDE LINK-SEALS OR EQUAL WHEN PIPING PENETRATES AN EXTERIOR WALL OR FLOOR SLAB. INSTALL SLEEVES OR CORE DRILL AT PROPER DIAMETER TO ASSURE WEATHERPROOF/MOISTER PROOF INSTALLATION.
6. THE MANUFACTURERS AND MODEL NUMBERS LISTED ON THE SCHEDULES AND DETAILS ARE THE BASIS OF DESIGN FOR THIS PROJECT. THIS INFORMATION IS PROVIDED FOR REFERENCE PURPOSE ONLY AND IS NOT INTENDED TO PRECLUDE SUBMITTAL OF OTHER MANUFACTURERS OF EQUAL QUALITY SUBJECT TO APPROVAL BY THE CONSTRUCTION MANAGER OR GENERAL CONTRACTOR.
7. PIPE SIZES ARE IN INCHES UNLESS NOTED OTHERWISE.
8. SLOPE SANITARY SEWER PIPING A MINIMUM OF 1/4" PER FOOT FOR PIPE 2" AND SMALLER AND 1/8" PER FOOT FOR PIPE LARGER THAN 2".
9. RUNOUTS TO EQUIPMENT SHALL BE SIZED AS INDICATED AND INCREASED OR REDUCED AT POINT OF FINAL CONNECTION TO EQUIPMENT.
10. ALL SYSTEMS SHALL BE TESTED FOR PROPER OPERATION IN ACCORDANCE WITH APPLICABLE CODE OR REGULATION.
11. PLUMBING CONTRACTOR SHALL SEAL ALL PIPE PENETRATIONS THROUGH WALLS, FLOORS AND ROOF WATERTIGHT. SEAL ALL PIPE PENETRATIONS THROUGH FIRE-RATED PARTITIONS WITH UL RATED FIRE RETARDANT CAULKING COMPOUND.
12. ALL CHANGES IN PIPE DIRECTION MUST COMPLY WITH THE FITTING INDICATED IN THE APPROPIATE SECTION IF THE INTERNATIONAL PLUMBING CODE.

PIPING MATERIALS:

1. REFER TO IPC 2015 FOR ALL APPLICABLE ASTM NUMBER/REQUIREMENTS AS WELL AS PIPING SUPPORT REQUIREMENTS. FOR ALL SYSTEMS AND MATERIALS.
2. ABOVE GROUND DOMESTIC WATER MAY BE TYPE L COPPER WITH SOLDERED JOINTS AND FITTINGS, SCHEDULE 40 CPVC WITH CHEMICAL WELD JOINTS AND FITTINGS OR PEX WITH ASSOCIATED COMPRESSION JOINTS AND FITTINGS. PEX SYSTEMS SHALL BE SUPPORTED IN STRICT COMPLIANCE WITH THE MANUFACTURER'S WRITTEN INSTRUCTIONS AND INTERNATIONAL PLUMBING CODE (IPC). DO NOT INSTALL PLASTIC PIPING SYSTEMS IN RETURN AIR PLENUMS. REFER TO MECHANICAL DRAWINGS FOR MORE INFORMATION.
3. UNDERGROUND DOMESTIC WATER SHALL BE DUCTILE IRON, TYPE K COPPER WITH SOLDERED JOINTS AND FITTINGS OR HDPE WITH FUSION WELDED JOINTS AND FITTINGS. SERVICE PIPING MUST MEET THE UTILITY PROVIDERS REQUIREMENTS.
4. ABOVE GROUND GAS PIPING SHALL BE SCHEDULE 40 STEEL THREADED AND COUPLED, WELDED OR FLANGED. LISTED FLEXIBLE GAS PIPING IS ALLOWABLE FOR FINAL CONNECTIONS TO EQUIPMENT AND APPLIANCES UNLESS OTHERWISE NOTED. DO NOT INSTALL THREADED OR FLANGED FITTINGS IN WALLS, BELOW GROUND OR ANY OTHER NON ACCESSIBLE SPACES.
5. UNDERGROUND GAS PIPING SHALL BE SCHEDULE 40 WELDED, OR HDPE FUSION WELDED. FLEXIBLE GAS PIPING IS ALLOWABLE IN USED IN PVC CONDUIT.
6. ABOVE OR BELOW GROUND SANITARY AND VENT PIPING MAY BE SCHEDULE 40 SOLID CORE PVC OR STANDARD WEIGHT CAST IRON SOIL PIPE. JOINTS AND FITTINGS MAY BE HUBLESS, HUB AND SPIGOT OR CHEMICAL WELDED. DO NOT INSTALL PLASTIC PIPING IN RETURN AIR PLENUMS. REFER TO MECHANICAL DRAWINGS FOR MORE INFORMATION.
7. PRESSURIZED OR PUMPED SANITARY LINES SHALL BE CPVC OR TYPE L COPPER WITH SOLDERED JOINTS AND FITTINGS WHEN PLASTIC IS NOT PERMITTED.

PRIME CONTRACT NOTE

THIS PROJECT IS SELF PRIME CONTRACTS. THE P.C. SHALL BE RESPONSIBLE FOR ALL CUTTING PATCHING, ETC. FOR THEIR WORK. THE P.C. SHALL MEET, REPORT WORK PROGRESS, ALL SHUTDOWNS, ETC. WITH OWNER. P.C. SHALL COORDINATE WITH ALL OTHER TRADES. SEE FRONT END SPECIFICATIONS FOR DETAILS.

PLUMBING LEGEND

NOT ALL SYMBOLS ARE USED ON DRAWINGS

	COLD WATER LINE (CW)
	HOT WATER LINE (HW)
	HOT WATER RETURN LINE (HWR)
140°	140°F HOT WATER LINE (140°)
140°R	140°F HOT WATER RETURN LINE (140°R)
GW	GRAYWATER (GW)
GWR	GRAYWATER RETURN (GWR)
GW-IR	GRAYWATER IRRIGATION
	VENT LINE (V)
SAN	SANITARY LINE (SAN)
SAN	EXISTING SANITARY LINE BELOW SLAB OR FLOOR(SAN)
A	COMPRESSED AIR (A)
CD	CONDENSATE DRAIN LINE MANUAL (CD)
PD	CONDENSATE DRAIN LINE PUMPED (PD)
F	FIRE; SPRINKLE SUPPLY LINE
DW	DEIONIZED OR DISTILLED WATER (DW)
G	NATURAL GAS (G)
LPG	PROPANE OR LIQUEFIED PETROLEUM GAS (LPG)
RWC	RAINWATER LINE (RWC)
ST	STORM WATER LINE OUTSIDE BUILDING (ST)
TPL	TRAP PRIMER LINE (TPL)
TW	TEMPERED WATER LINE (TEMP °F)
V	VACUUM (V)
AV	ACID VENT LINE (AV)
AW	ACID WASTE LINE (AW)
SOLV	SOLVENT WASTE LINE (SOLV)
AC	ACETYLENE LINE (AC)
AR	ARGON LINE (AR)
CO2	CARBON DIOXIDE LINE (CO2)
MA	MEDICAL AIR LINE (MA)
MV	MEDICAL VACUUM LINE (MV)
N2	NITROGEN LINE (N2)
NO	NITROGEN OXIDE (NO)
O2	OXYGEN LINE (O2)
	AUTOMATIC THREE-WAY ATC CONTROL VALVE
	AUTOMATIC THREE-WAY ATC CONTROL VALVE
	BACKFLOW PREVENTER
	BALANCING VALVE
	BALL VALVE
	BALL VALVE IN VERTICAL
	BUTTERFLY VALVE
	CHECK VALVE
	DOUBLE CHECK VALVE
	SOLENOID VALVE
	GATE VALVE IN VERTICAL
	GLOBE VALVE
	PRESSURE REDUCING VALVE
	COMBINATION TEMPERATURE/PRESSURE RELIEF VALVE
	THERMOMETER
	TEMPERATURE GAUGE IN THERMOWELL
	UNION
A	SHOCK ASSORBER/WATER HAMMER ARRESTOR "A" INDICATES SIZE; SEE SCHEDULE
	CIRCULATING OF IN-LINE PUMP (PLAN)
	CIRCULATING OF IN-LINE PUMP (SCHEMATIC)
G	GAS METER
W	WATER METER
M A	AIR VENT; MANUAL & AUTOMATIC
	FLEXIBLE CONNECTOR
	EXPANSION JOINT
	MOMENT GUIDE
	PIPE ANCHOR
	MOMENT GUIDE
	PIPE CAP
	PIPE REDUCER - CONCENTRIC
	PIPE REDUCER - ECCENTRIC
P	PIPE PITCHING DOWNWARD IN DIRECTION OF ARROW
	POINT OF NEW CONNECTION TO EXISTING
	LIMIT OF DEMOLITION
	TEE OUTLET DROP
	TEE OUTLET RISE
	PIPE DROPPING
	PIPE RISING
	RUNNING TRAP
	DIRECTION OF FLOW
	FIXTURE DRAIN WITH TRAP
FD	FLOOR DRAIN WITH TRAP (FD)
FD	FLOOR DRAIN WITHOUT TRAP (FD)
FCO	FLOOR CLEANOUT (FCO)
CO	CLEANOUT FLUSH (FC)
WCO	WALL CLEANOUT (WCO)
RD	ROOF DRAIN (RD)
HB	HOSE BIBB (HB)
NFWH A	NON FREEZE WALL HYDRANT (NFWH)
	FUNNEL DRAIN
	REMOVE EXISTING
	OUTSIDE SCREW AND YOKE VALVE (OS&Y)
	PLUG VALVE; NON-LUBRICATED TYPE
	"Y" STRAINER
	"Y" STRAINER w/BLOWDOWN VALVE AND HOSE BIBB
	GAS SHUT-OFF COCK
	PRESSURE GAUGE w/SHUT-OFF COCK

Client:

16-22 Union Street - Apartment Building

Client: Empire Property Construction
16-22 Union St.
Wilkes-Barre, Pa 18701

Consultants:

DMG
design management group
consulting engineers
570 299 7520
dmgeng.com

CAM architect
CAM architect, LLC
ARCHITECTS | PLANNERS
608 North Main St. Wilkes-Barre, PA 18705
T | 570| 824.3320
F | 570| 606.4966
www.camarchus.com

© 2026 CAM ARCHITECT

Seals:

PRELIMINARY - NOT FOR CONSTRUCTION
THIS DOCUMENT, ALTHOUGH IN PDF FORMAT, IS PROVIDED FOR INFORMATION OR REVIEW PURPOSES ONLY AND IS NOT INTENDED FOR CONSTRUCTION, BIDDING OR PERMIT. DO NOT USE THIS DOCUMENT FOR CONSTRUCTION. SEALED PRINTS OF CONSTRUCTION DOCUMENTS ARE AVAILABLE FROM THE ARCHITECT OF CONSTRUCTION DOCUMENTS PRIOR TO THE ARCHITECT.

Revisions | Issues

No: Date:

Phase:
PERMIT/PRICING

Project:	Apartment Building
Date:	06/15/2026
Drawn:	NW Checked: KJS
Scale:	AS NOTED
Sheet:	

PLUMBING COVER SHEET

P-1

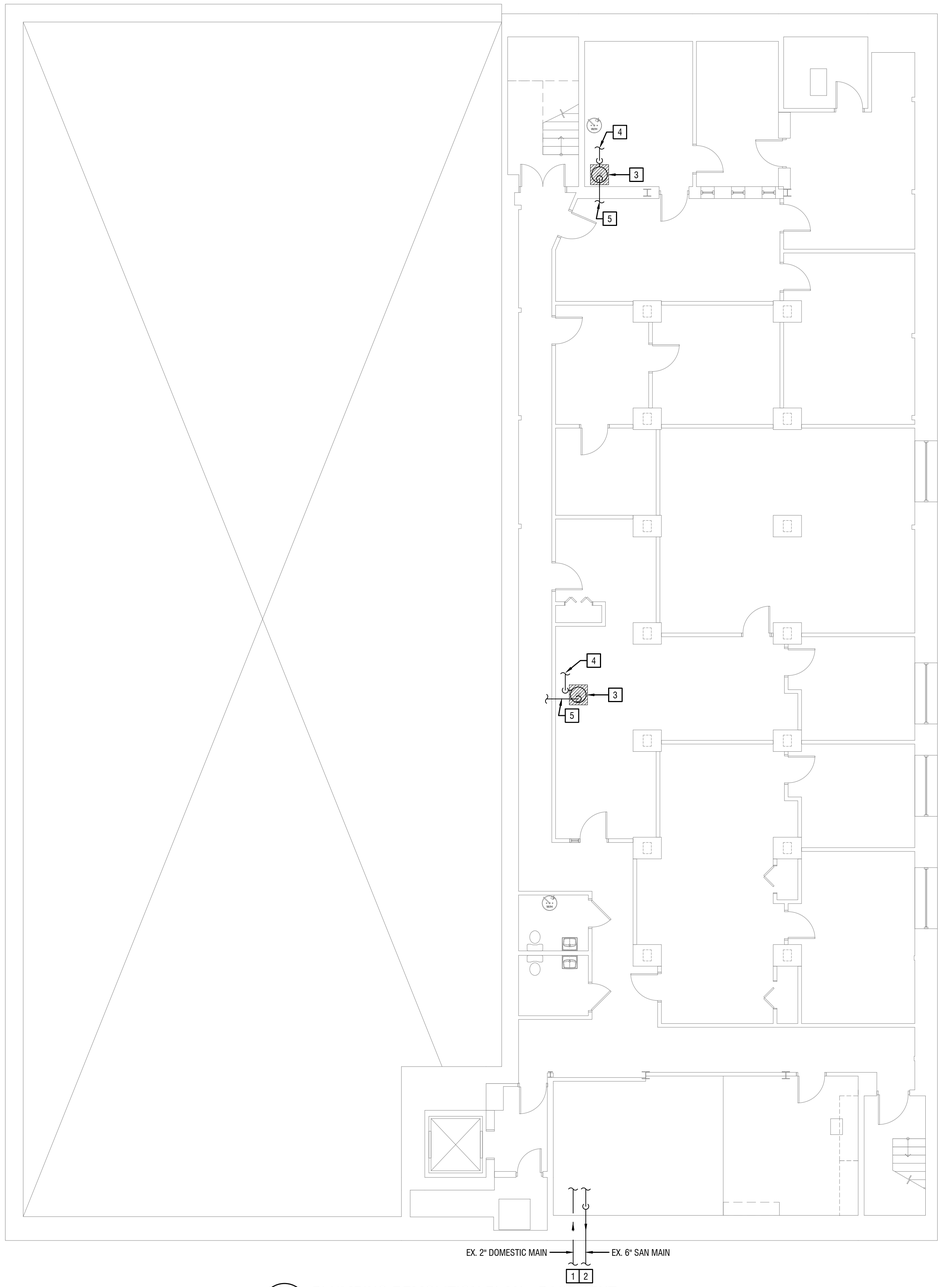

1 P-2 PLUMBING DEMOLITION PLAN - BASEMENT

SCALE: 1/8" = 1'-0"

2 P-2 PLUMBING DEMOLITION PLAN - FIRST FLOOR

SCALE: 1/8" = 1'-0"

KEYED DEMOLITION NOTES

1. APPROXIMATE LOCATION OF EXISTING DOMESTIC WATER SERVICE IN FROM STREET TO REMAIN. FIELD VERIFY EXISTING LOCATION, SIZE, METER/BACKFLOW CONDITION, ETC. PRIOR TO CONSTRUCTION. VERIFY WITH WATER AUTHORITY EXISTING SERVICE AND EQUIPMENT IS ADEQUATELY SIZED TO ACCOMMODATE NEW DOMESTIC WATER DEMAND.
2. APPROXIMATE LOCATION OF EXISTING SANITARY SERVICE IN FROM STREET TO REMAIN. FIELD VERIFY EXISTING LOCATION, SIZE, CONDITION, ETC. PRIOR TO CONSTRUCTION. VERIFY WITH SEWER AUTHORITY EXISTING SERVICE IS ADEQUATELY SIZED TO ACCOMMODATE NEW SANITARY DEMAND.
3. EXISTING GRINDER PUMP AND BASIN SITTING AT BASEMENT FLOOR LEVEL TO BE REMOVED.
4. EXISTING GRAVITY INLET PIPING TO BASEMENT GRINDER PUMP TO BE REDIRECTED TO NEAREST ADEQUATE SIZED EXISTING GRAVITY SANITARY PIPING AT BASEMENT CEILING HEIGHT. FIELD VERIFY EXISTING PIPING SIZES, LOCATIONS, AND BEST POSSIBLE POINT OF NEW CONNECTION.
5. EXISTING FORCED OUTLET PIPING FROM BASEMENT GRINDER PUMP TO BE REMOVED FROM GRINDER PUMP OUTLET TO GRAVITY CONNECTION. FIELD VERIFY EXISTING LOCATION AND ROUTING PRIOR TO CONSTRUCTION.

GENERAL DEMOLITION NOTES

1. HATCHED AREAS INDICATE BRANCH PIPING AND ALL RELATED PLUMBING EQUIPMENT TO BE REMOVED, UNLESS OTHERWISE NOTED.
2. THE INTENT OF THE DEMOLITION DRAWINGS IS TO GIVE THE P.C AN OVERALL SCOPE OF WORK REQUIRED TO COMPLETE THIS PROJECT.
3. IT ALSO THE INTENT OF THE DRAWINGS TO PROVIDE A COMPLETE CLEAN SPACE IN THE AREAS DESIGNATED PRIOR TO CONSTRUCTION.
4. ALL PIPING SHOWN IS EXISTING AND INDICATES APPROXIMATE LOCATIONS AND DIRECTIONS. IT SHALL BE THIS CONTRACTORS RESPONSIBILITY TO FIELD VERIFY EXACT PIPING LOCATIONS AND SIZES DURING DEMOLITION / CONSTRUCTION PHASES OF THIS PROJECT.
5. ALL EXISTING DOMESTIC WATER, SANITARY, VENT, STORMWATER, NATURAL GAS, FIRE PROTECTION, ETC. PIPING OUTSIDE OF WORK AREA SHALL REMAIN AND REMAIN IN SERVICE.
6. THE P.C. IS CAUTIONED THAT WHEN PERFORMING DEMOLITION WORK, PLUMBING AND PROCESS PIPING SERVING AREAS OF THE BUILDING OUTSIDE THE WORK AREA MUST REMAIN IN OPERATION.
7. WHEN DISCONNECTING FIXTURES FOR DEMOLITION, FIXTURES SHALL BE DISCARDED, UNLESS OTHERWISE SPECIFIED, AND ALL RELATED PIPING SHALL BE CAPPED OR PLUGGED IN THE WALLS, ABOVE CEILINGS OR BELOW FLOORS AS CLOSE AS POSSIBLE TO THE SOURCE.
8. THE OWNER RESERVES THE RIGHT TO CLAIM ANY MATERIALS REMOVED DURING DEMOLITION THAT WILL NOT BE REUSED. THE P.C. IS RESPONSIBLE TO REMOVE FROM SITE ANY MATERIALS NOT CLAIMED BY THE OWNER.
9. CONTRACTOR SHALL REMOVE ALL EXISTING DEAD LEGS (ANY BRANCH OR MAIN PIPING WITH NO FLOW) WITHIN THE DOMESTIC WATER SYSTEM DURING DEMOLITION TO PREVENT STAGNATION OF ANY SITTING WATER AND ASSOCIATED BACTERIA GROWTH.

KEYED DEMOLITION NOTES

1. EXISTING PLUMBING FIXTURES, INCLUDING ALL FAUCETS, FITTINGS, VALVES, HANGERS, ACCESSORIES, ETC. AND SUPPLY BRANCH PIPING TO BE DEMOLISHED. CUT AND CAP EXISTING COLD/HOT WATER AND SANITARY/VENT BRANCH PIPING BACK TO MAIN AS CLOSE TO SOURCE AS POSSIBLE.

GENERAL DEMOLITION NOTES

1. HATCHED AREAS INDICATE BRANCH PIPING AND ALL RELATED PLUMBING EQUIPMENT TO BE REMOVED, UNLESS OTHERWISE NOTED.
2. THE INTENT OF THE DEMOLITION DRAWINGS IS TO GIVE THE P.C AN OVERALL SCOPE OF WORK REQUIRED TO COMPLETE THIS PROJECT.
3. IT ALSO THE INTENT OF THE DRAWINGS TO PROVIDE A COMPLETE CLEAN SPACE IN THE AREAS DESIGNATED PRIOR TO CONSTRUCTION.
4. ALL PIPING SHOWN IS EXISTING AND INDICATES APPROXIMATE LOCATIONS AND DIRECTIONS. IT SHALL BE THIS CONTRACTORS RESPONSIBILITY TO FIELD VERIFY EXACT PIPING LOCATIONS AND SIZES DURING DEMOLITION / CONSTRUCTION PHASES OF THIS PROJECT.
5. ALL EXISTING DOMESTIC WATER, SANITARY, VENT, STORMWATER, NATURAL GAS, FIRE PROTECTION, ETC. PIPING OUTSIDE OF WORK AREA SHALL REMAIN AND REMAIN IN SERVICE.
6. THE P.C. IS CAUTIONED THAT WHEN PERFORMING DEMOLITION WORK, PLUMBING AND PROCESS PIPING SERVING AREAS OF THE BUILDING OUTSIDE THE WORK AREA MUST REMAIN IN OPERATION.
7. WHEN DISCONNECTING FIXTURES FOR DEMOLITION, FIXTURES SHALL BE DISCARDED, UNLESS OTHERWISE SPECIFIED, AND ALL RELATED PIPING SHALL BE CAPPED OR PLUGGED IN THE WALLS, ABOVE CEILINGS OR BELOW FLOORS AS CLOSE AS POSSIBLE TO THE SOURCE.
8. THE OWNER RESERVES THE RIGHT TO CLAIM ANY MATERIALS REMOVED DURING DEMOLITION THAT WILL NOT BE REUSED. THE P.C. IS RESPONSIBLE TO REMOVE FROM SITE ANY MATERIALS NOT CLAIMED BY THE OWNER.
9. CONTRACTOR SHALL REMOVE ALL EXISTING DEAD LEGS (ANY BRANCH OR MAIN PIPING WITH NO FLOW) WITHIN THE DOMESTIC WATER SYSTEM DURING DEMOLITION TO PREVENT STAGNATION OF ANY SITTING WATER AND ASSOCIATED BACTERIA GROWTH.

Client:

16-22 Union Street - Apartment Building

Client: Empire Property Construction
16-22 Union St.
Wilkes-Barre, Pa 18701

Consultants:

DMG
design management group
consulting engineers
570 299 7520
dmgeng.com

CAM architect
CAM architect, LLC
ARCHITECTS | PLANNERS
606 North Main St. Wilkes-Barre, PA 18705
T | 570 | 824.3320
F | 570 | 606.4966
www.camarchus.com

© 2026 CAM ARCHITECT

Seals:

PRELIMINARY - NOT FOR CONSTRUCTION
THIS DOCUMENT IS FOR INTERIM REVIEW PURPOSES ONLY AND IS NOT INTENDED FOR CONSTRUCTION OR BIDDING. DO AND START CONSTRUCTION WITHOUT THE SEALED SET OF CONSTRUCTION DOCUMENTS FROM THE ARCHITECT.

Revisions | Issues

No:	Date:

Phase:
PERMIT/PRICING

Project: Apartment Building
Date: 06/15/2026
Drawn: NW
Checked: KJS
Scale: AS NOTED
Sheet:

PLUMBING FLOOR PLANS - DEMOLITION

P-2

1 / P-3 PLUMBING DEMOLITION PLAN - SECOND FLOOR

SCALE: 1/8" = 1'-0"

KEYED DEMOLITION NOTES

1. EXISTING PLUMBING FIXTURES, INCLUDING ALL FAUCETS, FITTINGS, VALVES, HANGERS, ACCESSORIES, ETC. AND SUPPLY BRANCH PIPING TO BE DEMOLISHED. CUT AND CAP EXISTING COLD/HOT WATER AND SANITARY/VENT BRANCH PIPING BACK TO MAIN AS CLOSE TO SOURCE AS POSSIBLE.

GENERAL DEMOLITION NOTES

1. HATCHED AREAS INDICATE BRANCH PIPING AND ALL RELATED PLUMBING EQUIPMENT TO BE REMOVED, UNLESS OTHERWISE NOTED.
2. THE INTENT OF THE DEMOLITION DRAWINGS IS TO GIVE THE P.C AN OVERALL SCOPE OF WORK REQUIRED TO COMPLETE THIS PROJECT.
3. IT ALSO THE INTENT OF THE DRAWINGS TO PROVIDE A COMPLETE CLEAN SPACE IN THE AREAS DESIGNATED PRIOR TO CONSTRUCTION.
4. ALL PIPING SHOWN IS EXISTING AND INDICATES APPROXIMATE LOCATIONS AND DIRECTIONS. IT SHALL BE THIS CONTRACTORS RESPONSIBILITY TO FIELD VERIFY EXACT PIPING LOCATIONS AND SIZES DURING DEMOLITION / CONSTRUCTION PHASES OF THIS PROJECT.
5. ALL EXISTING DOMESTIC WATER, SANITARY, VENT, STORMWATER, NATURAL GAS, FIRE PROTECTION, ETC. PIPING OUTSIDE OF WORK AREA SHALL REMAIN AND REMAIN IN SERVICE.
6. THE P.C. IS CAUTIONED THAT WHEN PERFORMING DEMOLITION WORK, PLUMBING AND PROCESS PIPING SERVING AREAS OF THE BUILDING OUTSIDE THE WORK AREA MUST REMAIN IN OPERATION.
7. WHEN DISCONNECTING FIXTURES FOR DEMOLITION, FIXTURES SHALL BE DISCARDED, UNLESS OTHERWISE SPECIFIED, AND ALL RELATED PIPING SHALL BE CAPPED OR PLUGGED IN THE WALLS, ABOVE CEILINGS OR BELOW FLOORS AS CLOSE AS POSSIBLE TO THE SOURCE.
8. THE OWNER RESERVES THE RIGHT TO CLAIM ANY MATERIALS REMOVED DURING DEMOLITION THAT WILL NOT BE REUSED. THE P.C. IS RESPONSIBLE TO REMOVE FROM SITE ANY MATERIALS NOT CLAIMED BY THE OWNER.
9. CONTRACTOR SHALL REMOVE ALL EXISTING DEAD LEGS (ANY BRANCH OR MAIN PIPING WITH NO FLOW) WITHIN THE DOMESTIC WATER SYSTEM DURING DEMOLITION TO PREVENT STAGNATION OF ANY SITTING WATER AND ASSOCIATED BACTERIA GROWTH.

2 / P-3 PLUMBING DEMOLITION PLAN - THIRD FLOOR

SCALE: 1/8" = 1'-0"

KEYED DEMOLITION NOTES

1. EXISTING PLUMBING FIXTURES, INCLUDING ALL FAUCETS, FITTINGS, VALVES, HANGERS, ACCESSORIES, ETC. AND SUPPLY BRANCH PIPING TO BE DEMOLISHED. CUT AND CAP EXISTING COLD/HOT WATER AND SANITARY/VENT BRANCH PIPING BACK TO MAIN AS CLOSE TO SOURCE AS POSSIBLE.

GENERAL DEMOLITION NOTES

1. HATCHED AREAS INDICATE BRANCH PIPING AND ALL RELATED PLUMBING EQUIPMENT TO BE REMOVED, UNLESS OTHERWISE NOTED.
2. THE INTENT OF THE DEMOLITION DRAWINGS IS TO GIVE THE P.C AN OVERALL SCOPE OF WORK REQUIRED TO COMPLETE THIS PROJECT.
3. IT ALSO THE INTENT OF THE DRAWINGS TO PROVIDE A COMPLETE CLEAN SPACE IN THE AREAS DESIGNATED PRIOR TO CONSTRUCTION.
4. ALL PIPING SHOWN IS EXISTING AND INDICATES APPROXIMATE LOCATIONS AND DIRECTIONS. IT SHALL BE THIS CONTRACTORS RESPONSIBILITY TO FIELD VERIFY EXACT PIPING LOCATIONS AND SIZES DURING DEMOLITION / CONSTRUCTION PHASES OF THIS PROJECT.
5. ALL EXISTING DOMESTIC WATER, SANITARY, VENT, STORMWATER, NATURAL GAS, FIRE PROTECTION, ETC. PIPING OUTSIDE OF WORK AREA SHALL REMAIN AND REMAIN IN SERVICE.
6. THE P.C. IS CAUTIONED THAT WHEN PERFORMING DEMOLITION WORK, PLUMBING AND PROCESS PIPING SERVING AREAS OF THE BUILDING OUTSIDE THE WORK AREA MUST REMAIN IN OPERATION.
7. WHEN DISCONNECTING FIXTURES FOR DEMOLITION, FIXTURES SHALL BE DISCARDED, UNLESS OTHERWISE SPECIFIED, AND ALL RELATED PIPING SHALL BE CAPPED OR PLUGGED IN THE WALLS, ABOVE CEILINGS OR BELOW FLOORS AS CLOSE AS POSSIBLE TO THE SOURCE.
8. THE OWNER RESERVES THE RIGHT TO CLAIM ANY MATERIALS REMOVED DURING DEMOLITION THAT WILL NOT BE REUSED. THE P.C. IS RESPONSIBLE TO REMOVE FROM SITE ANY MATERIALS NOT CLAIMED BY THE OWNER.
9. CONTRACTOR SHALL REMOVE ALL EXISTING DEAD LEGS (ANY BRANCH OR MAIN PIPING WITH NO FLOW) WITHIN THE DOMESTIC WATER SYSTEM DURING DEMOLITION TO PREVENT STAGNATION OF ANY SITTING WATER AND ASSOCIATED BACTERIA GROWTH.

Client:

16-22 Union Street - Apartment Building

Client: Empire Property Construction
16-22 Union St.
Wilkes-Barre, Pa 18701

Consultants:

DMG
design management group
consulting engineers
570 299 7520
dmgeng.com

CAM architect
CAM architect, LLC
ARCHITECTS | PLANNERS
606 North Main St. Wilkes-Barre, PA 18705
T | 570| 824.3320
F | 570| 606.4966
www.camarchus.com

© 2026 CAM ARCHITECT

Seals:

PRELIMINARY - NOT FOR CONSTRUCTION
THIS DOCUMENT, LEGEND, NOTES AND DRAWINGS ARE FOR PRELIMINARY PURPOSES ONLY, AND IS NOT INTENDED FOR CONSTRUCTION OR BIDDING, AND IS NOT OTHERWISE FOR CONSTRUCTION UNTIL SEALED, DATED AND SIGNED BY THE ARCHITECT. ANY CONSTRUCTION WITHOUT A SEALED SET OF CONSTRUCTION DOCUMENTS FROM THE ARCHITECT IS PROHIBITED.

Revisions | Issues

No:	Date:

Phase:
PERMIT/PRICING

Project:	Apartment Building		
Date:	06/15/2026		
Drawn:	NW	Checked:	KJS
Scale:	AS NOTED		
Sheet:	PLUMBING FLOOR PLANS - DEMOLITION		

P-3

1 P-4 PLUMBING DEMOLITION PLAN - FOURTH FLOOR

SCALE: 1/8" = 1'-0"

KEYED CONSTRUCTION NOTES

1. EXISTING PLUMBING FIXTURES, INCLUDING ALL FAUCETS, FITTINGS, VALVES, HANGERS, ACCESSORIES, ETC. AND SUPPLY BRANCH PIPING TO BE DEMOLISHED. CUT AND CAP EXISTING COLD/HOT WATER AND SANITARY/VENT BRANCH PIPING BACK TO MAIN AS CLOSE TO SOURCE AS POSSIBLE.

GENERAL CONSTRUCTION NOTES

1. HATCHED AREAS INDICATE BRANCH PIPING AND ALL RELATED PLUMBING EQUIPMENT TO BE REMOVED, UNLESS OTHERWISE NOTED.
2. THE INTENT OF THE DEMOLITION DRAWINGS IS TO GIVE THE P.C AN OVERALL SCOPE OF WORK REQUIRED TO COMPLETE THIS PROJECT.
3. IT ALSO THE INTENT OF THE DRAWINGS TO PROVIDE A COMPLETE CLEAN SPACE IN THE AREAS DESIGNATED PRIOR TO CONSTRUCTION.
4. ALL PIPING SHOWN IS EXISTING AND INDICATES APPROXIMATE LOCATIONS AND DIRECTIONS. IT SHALL BE THIS CONTRACTORS RESPONSIBILITY TO FIELD VERIFY EXACT PIPING LOCATIONS AND SIZES DURING DEMOLITION / CONSTRUCTION PHASES OF THIS PROJECT.
5. ALL EXISTING DOMESTIC WATER, SANITARY, VENT, STORMWATER, NATURAL GAS, FIRE PROTECTION, ETC. PIPING OUTSIDE OF WORK AREA SHALL REMAIN AND REMAIN IN SERVICE.
6. THE P.C. IS CAUTIONED THAT WHEN PERFORMING DEMOLITION WORK, PLUMBING AND PROCESS PIPING SERVING AREAS OF THE BUILDING OUTSIDE THE WORK AREA MUST REMAIN IN OPERATION.
7. WHEN DISCONNECTING FIXTURES FOR DEMOLITION, FIXTURES SHALL BE DISCARDED, UNLESS OTHERWISE SPECIFIED, AND ALL RELATED PIPING SHALL BE CAPPED OR PLUGGED IN THE WALLS, ABOVE CEILINGS OR BELOW FLOORS AS CLOSE AS POSSIBLE TO THE SOURCE.
8. THE OWNER RESERVES THE RIGHT TO CLAIM ANY MATERIALS REMOVED DURING DEMOLITION THAT WILL NOT BE REUSED. THE P.C. IS RESPONSIBLE TO REMOVE FROM SITE ANY MATERIALS NOT CLAIMED BY THE OWNER.
9. CONTRACTOR SHALL REMOVE ALL EXISTING DEAD LEGS (ANY BRANCH OR MAIN PIPING WITH NO FLOW) WITHIN THE DOMESTIC WATER SYSTEM DURING DEMOLITION TO PREVENT STAGNATION OF ANY SITTING WATER AND ASSOCIATED BACTERIA GROWTH.

Client:

16-22 Union Street - Apartment Building

Client: Empire Property Construction
16-22 Union St.
Wilkes-Barre, Pa 18701

Consultants:

DMG
design management group
consulting engineers
570 299 7520
dmgeng.com

CAM architect
CAM architect, LLC
ARCHITECTS | PLANNERS
606 North Main St. Wilkes-Barre, PA 18705
T | 570 | 824.3320
F | 570 | 606.4966
www.camarchus.com

© 2026 CAM ARCHITECT

Seals:

PRELIMINARY - NOT FOR CONSTRUCTION
THIS DOCUMENT IS PRELIMINARY IN NATURE AND IS NOT FOR BIDDING OR PERMITTING PURPOSES. DO NOT START CONSTRUCTION ON THE BASIS OF THIS DOCUMENT. SEALED SET OF CONSTRUCTION DOCUMENTS FROM THE ARCHITECT OF CONSTRUCTION WORK.

Revisions | Issues

No:	Date:

Phase:

PERMIT/PRICING

Project: Apartment Building
Date: 06/15/2026
Drawn: NW
Checked: KJS
Scale: AS NOTED
Sheet: PLUMBING FLOOR PLANS - DEMOLITION

P-4

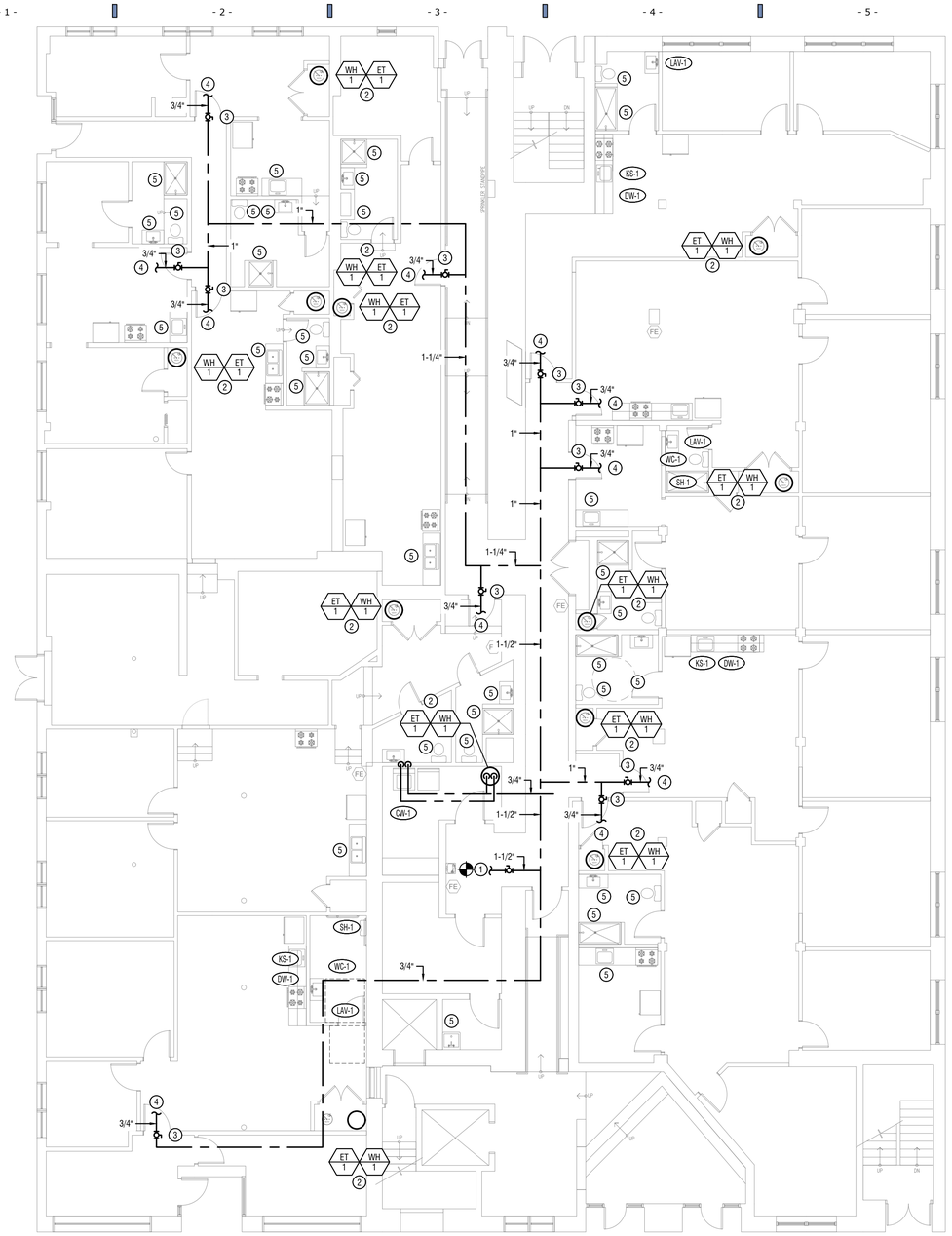

1 P-5 PLUMBING NEW PLAN DOMESTIC WATER - FIRST FLOOR

SCALE: 1/8" = 1'-0"

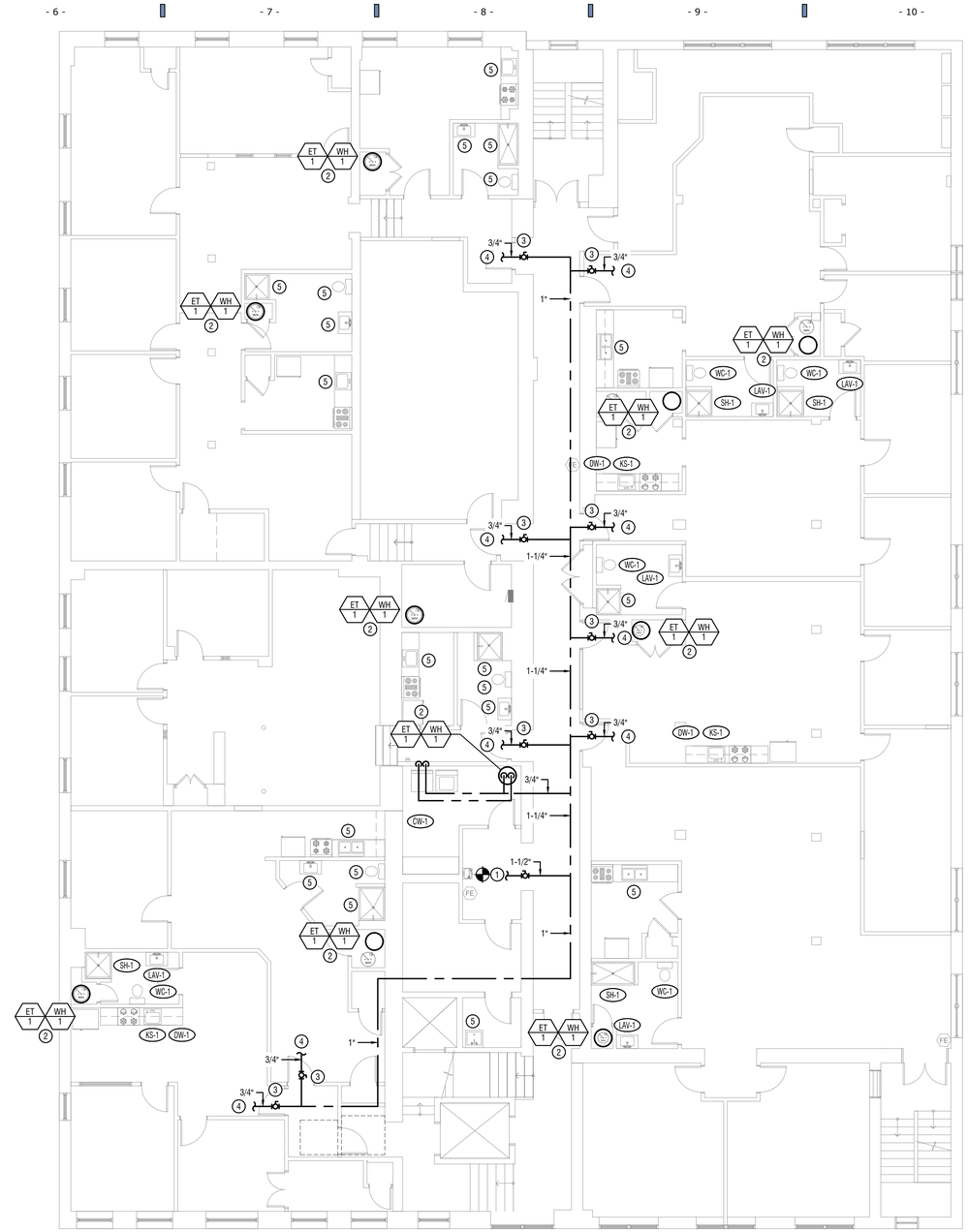

2 P-5 PLUMBING NEW PLAN DOMESTIC WATER - SECOND FLOOR

SCALE: 1/8" = 1'-0"

KEYED CONSTRUCTION NOTES

1. CONNECT NEW DOMESTIC WATER FEED SERVING PLUMBING FIXTURES THIS FLOOR LEVEL TO EXISTING NEAREST ADEQUATELY SIZED WATER MAIN PIPING. FIELD VERIFY EXISTING PIPING LOCATIONS, SIZES, CONDITIONS, ETC. AND BEST POSSIBLE POINT OF NEW CONNECTION. PROVIDE SHUT-OFF VALVE AT POINT OF CONNECTION.
2. WATER HEATER WITH EXPANSION TANK ON CW LINE MOUNTED ON DRAIN PAN. DRAIN PAN TO INDIRECTLY DRAIN TO NEAREST FLOOR DRAIN. REFER TO SCHEDULE AND DETAIL FOR MORE INFORMATION. COORDINATE WATER HEATER LOCATIONS, CLEARANCES WITHIN CLOSET, AND CLOSET SIZES WITH OWNER/ARCHITECT PRIOR TO CONSTRUCTION.
3. PROVIDE ACCESSIBLE SHUTOFF VALVE ON DOMESTIC WATER LINE SERVING INDIVIDUAL APARTMENT.
4. CONNECT NEW APARTMENT DOMESTIC WATER LINE ABOVE CEILING LEVEL TO INDIVIDUAL FIXTURES AND WATER HEATER WITHIN APARTMENT. COORDINATE EXACT DOMESTIC COLD AND HOT WATER CONNECTION SIZES WITH PLUMBING FIXTURE SCHEDULE AND MANUFACTURER'S SPECIFICATIONS.
5. EXISTING DOMESTIC WATER PIPING, VALVES, AND PLUMBING FIXTURES SHALL BE EVALUATED BY THE CONTRACTOR AND OWNER FOR CONDITION AND REUSE. REUSE EXISTING COMPONENTS WHERE ACCEPTABLE TO THE OWNER AND DETERMINED TO BE IN GOOD WORKING CONDITION. COMPONENTS DEEMED UNSUITABLE FOR REUSE SHALL BE REPLACED IN KIND. RECONNECT REUSED OR REPLACEMENT COMPONENTS TO EXISTING DOMESTIC WATER SYSTEMS AS REQUIRED FOR A COMPLETE AND OPERABLE INSTALLATION.

GENERAL CONSTRUCTION NOTES

1. ALL DOMESTIC WATER LINES SHOWN ON THIS FLOOR PLAN TO BE INSTALLED ABOVE CEILING LEVEL, UNLESS OTHERWISE NOTED.
2. ALL DOMESTIC WATER RISE/DROPS SHALL BE CONCEALED, UNLESS OTHERWISE DIRECTED BY THE OWNER/ARCHITECT. COORDINATE ANY REQUIRED NEW WALL FUROUTS, WALL DIMENSIONS, PIPE CHASES, ETC. WITH OWNER, ARCHITECT, AND GC PRIOR TO CONSTRUCTION.
3. CONTRACTOR SHALL VERIFY ADEQUATE HEATING IS PROVIDED IN AREAS INSTALLED WITH WATER PIPING. COORDINATE HEATED AREAS WITH MC AND OWNER PRIOR TO INSTALLATION.
4. CONTRACTOR SHALL FULLY COORDINATE ANY REQUIRED DEMOLITION AND REPAIR OF EXISTING WALLS, CEILINGS, OR FLOORS FOR INSTALLATION OF NEW PLUMBING PIPING OR EQUIPMENT WITH OWNER/ARCHITECT PRIOR TO CONSTRUCTION.
5. PLUMBING CONTRACTOR SHALL THOROUGHLY EXAMINE ALL EXISTING PLUMBING FIXTURES TO BE REUSED PRIOR TO CONSTRUCTION. VERIFY EXISTING FIXTURE AND ASSOCIATED PIPING/ACCESSORIES ARE IN PROPER WORKING ORDER. INSPECT, CLEAN, AND REPAIR/REPLACE ANY CRACKED, LEAKING, DEFECTIVE FIXTURES OR PIPING AS REQUIRED.

DOMESTIC WATER PIPING WITHIN INDIVIDUAL APARTMENT UNITS IS NOT SHOWN IN ITS ENTIRETY. CONTRACTOR SHALL PROVIDE AND COORDINATE ALL REQUIRED HOT, COLD, AND RECIRCULATION PIPING (WHERE APPLICABLE) FROM THE POINTS SHOWN ON THE DRAWINGS TO ALL PLUMBING FIXTURES, WATER HEATERS, AND OTHER DEVICES REQUIRING DOMESTIC WATER SERVICE WITHIN EACH UNIT. DOMESTIC WATER MAINS SERVING INDIVIDUAL APARTMENT UNITS SHALL BE 3/4-INCH MINIMUM UNLESS NOTED OTHERWISE. BRANCH PIPING TO INDIVIDUAL FIXTURES SHALL BE SIZED AND INSTALLED IN ACCORDANCE WITH THE PLUMBING FIXTURE SCHEDULE, MANUFACTURER'S REQUIREMENTS, APPLICABLE CODES, AND PROJECT CONDITIONS. CONTRACTOR SHALL COORDINATE FINAL ROUTING WITH ARCHITECTURAL, STRUCTURAL, AND OTHER TRADES PRIOR TO INSTALLATION.

Client:

16-22 Union Street - Apartment Building

Client: Empire Property Construction
16-22 Union St.
Wilkes-Barre, Pa 18701

Consultants:

DMG
design management group
consulting engineers
570 299 7520
dmgeng.com

CAM architect
CAM architect, LLC
ARCHITECTS | PLANNERS
606 North Main St, Wilkes-Barre, PA 18705
T | 570| 824-3320
F | 570| 606-4966
www.camarchus.com

© 2026 CAM ARCHITECT

Seals:

PRELIMINARY - NOT FOR CONSTRUCTION
THIS DOCUMENT IS LICENSED MERELY FOR INFORMATIONAL PURPOSES, DO, AND IS NOT INTENDED FOR CONSTRUCTION OR BUILDING, AND START CONSTRUCTION WITHOUT THE ARCHITECT OF CONSTRUCTION DOCUMENTS FROM THE

Revisions | Issues

No: Date:

Phase:
PERMIT/PRICING

Project: Apartment Building
Date: 06/15/2026
Drawn: NW Checked: KJS
Scale: AS NOTED
Sheet:
PLUMBING FLOOR PLANS - NEW DOMESTIC WATER

P-5

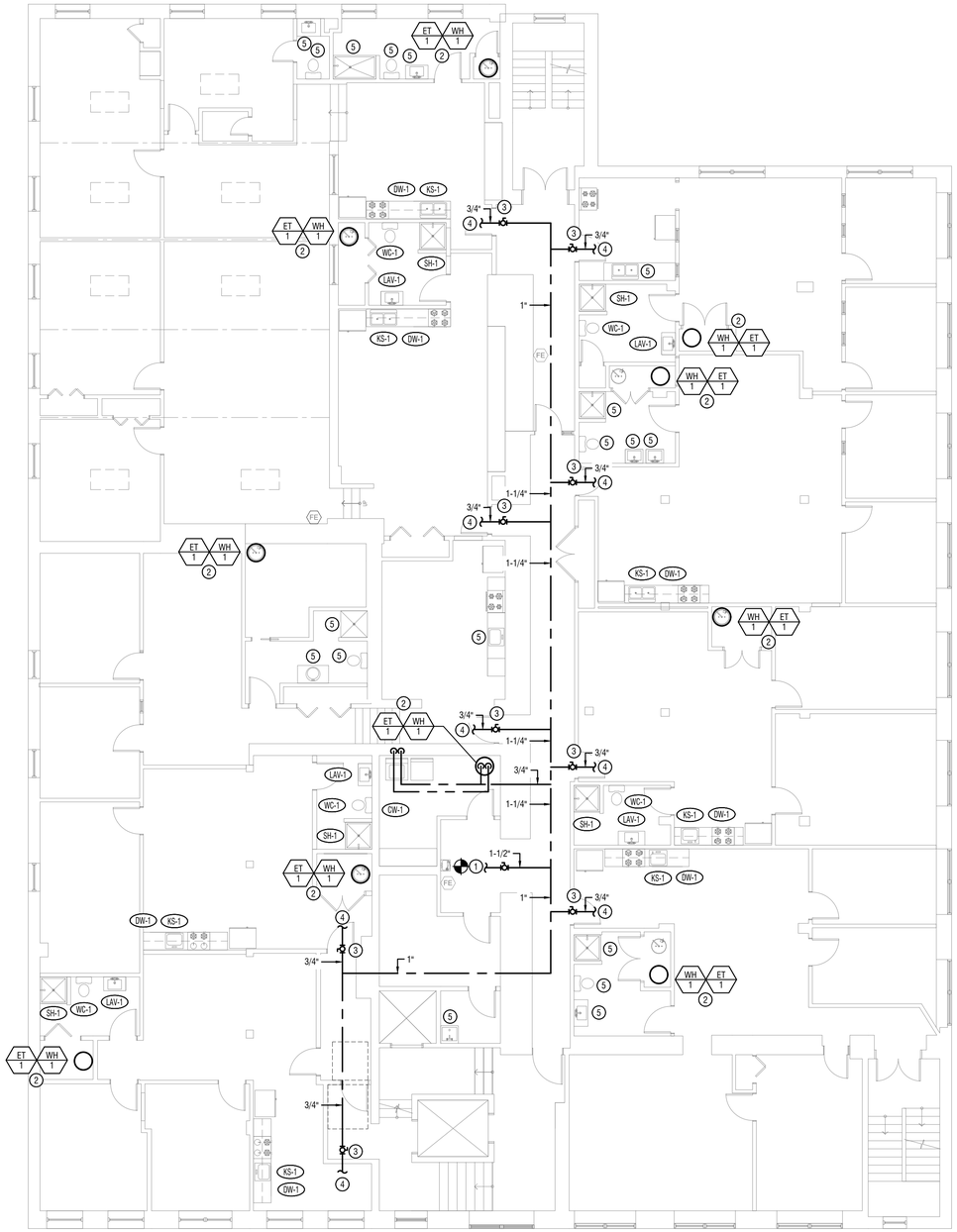

1 P-6 PLUMBING NEW PLAN DOMESTIC WATER - THIRD FLOOR

SCALE: 1/8" = 1'-0"

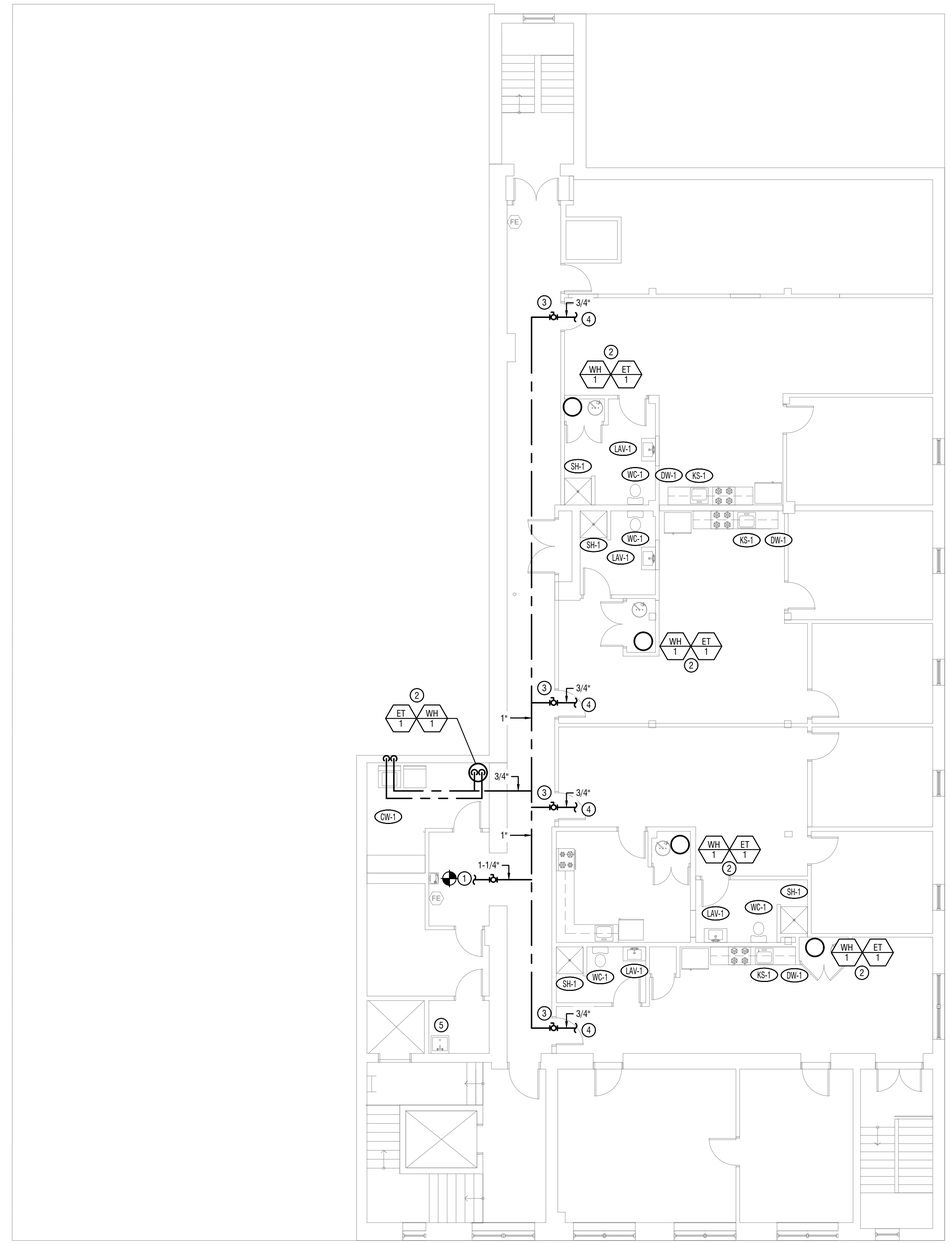

2 P-6 PLUMBING NEW PLAN DOMESTIC WATER - FOURTH FLOOR

SCALE: 1/8" = 1'-0"

KEYED CONSTRUCTION NOTES

1. CONNECT NEW DOMESTIC WATER FEED SERVING PLUMBING FIXTURES THIS FLOOR LEVEL TO EXISTING NEAREST ADEQUATELY SIZED WATER MAIN PIPING. FIELD VERIFY EXISTING PIPING LOCATIONS, SIZES, CONDITIONS, ETC. AND BEST POSSIBLE POINT OF NEW CONNECTION. PROVIDE SHUT-OFF VALVE AT POINT OF CONNECTION.
2. WATER HEATER WITH EXPANSION TANK ON CW LINE MOUNTED ON DRAIN PAN. DRAIN PAN TO INDIRECTLY DRAIN TO NEAREST FLOOR DRAIN. REFER TO SCHEDULE AND DETAIL FOR MORE INFORMATION. COORDINATE WATER HEATER LOCATIONS, CLEARANCES WITHIN CLOSET, AND CLOSET SIZES WITH OWNER/ARCHITECT PRIOR TO CONSTRUCTION.
3. PROVIDE ACCESSIBLE SHUTOFF VALVE ON DOMESTIC WATER LINE SERVING INDIVIDUAL APARTMENT.
4. CONNECT NEW APARTMENT DOMESTIC WATER LINE ABOVE CEILING LEVEL TO INDIVIDUAL FIXTURES AND WATER HEATER WITHIN APARTMENT. COORDINATE EXACT DOMESTIC COLD AND HOT WATER CONNECTION SIZES WITH PLUMBING FIXTURE SCHEDULE AND MANUFACTURER'S SPECIFICATIONS.
5. EXISTING DOMESTIC WATER PIPING, VALVES, AND PLUMBING FIXTURES SHALL BE EVALUATED BY THE CONTRACTOR AND OWNER FOR CONDITION AND REUSE. REUSE EXISTING COMPONENTS WHERE ACCEPTABLE TO THE OWNER AND DETERMINED TO BE IN GOOD WORKING CONDITION. COMPONENTS DEEMED UNSUITABLE FOR REUSE SHALL BE REPLACED IN KIND. RECONNECT REUSED OR REPLACEMENT COMPONENTS TO EXISTING DOMESTIC WATER SYSTEMS AS REQUIRED FOR A COMPLETE AND OPERABLE INSTALLATION.

GENERAL CONSTRUCTION NOTES

1. ALL DOMESTIC WATER LINES SHOWN ON THIS FLOOR PLAN TO BE INSTALLED ABOVE CEILING LEVEL, UNLESS OTHERWISE NOTED.
2. ALL DOMESTIC WATER RISE/DROPS SHALL BE CONCEALED, UNLESS OTHERWISE DIRECTED BY THE OWNER/ARCHITECT. COORDINATE ANY REQUIRED NEW WALL FUROUTS, WALL DIMENSIONS, PIPE CHASES, ETC. WITH OWNER, ARCHITECT, AND GC PRIOR TO CONSTRUCTION.
3. CONTRACTOR SHALL VERIFY ADEQUATE HEATING IS PROVIDED IN AREAS INSTALLED WITH WATER PIPING. COORDINATE HEATED AREAS WITH MC AND OWNER PRIOR TO INSTALLATION.
4. CONTRACTOR SHALL FULLY COORDINATE ANY REQUIRED DEMOLITION AND REPAIR OF EXISTING WALLS, CEILINGS, OR FLOORS FOR INSTALLATION OF NEW PLUMBING PIPING OR EQUIPMENT WITH OWNER/ARCHITECT PRIOR TO CONSTRUCTION.
5. PLUMBING CONTRACTOR SHALL THOROUGHLY EXAMINE ALL EXISTING PLUMBING FIXTURES TO BE REUSED PRIOR TO CONSTRUCTION. VERIFY EXISTING FIXTURE AND ASSOCIATED PIPING/ACCESSORIES ARE IN PROPER WORKING ORDER. INSPECT, CLEAN, AND REPAIR/REPLACE ANY CRACKED, LEAKING, DEFECTIVE FIXTURES OR PIPING AS REQUIRED.

DOMESTIC WATER PIPING WITHIN INDIVIDUAL APARTMENT UNITS IS NOT SHOWN IN ITS ENTIRETY. CONTRACTOR SHALL PROVIDE AND COORDINATE ALL REQUIRED HOT, COLD, AND RECIRCULATION PIPING (WHERE APPLICABLE) FROM THE POINTS SHOWN ON THE DRAWINGS TO ALL PLUMBING FIXTURES, WATER HEATERS, AND OTHER DEVICES REQUIRING DOMESTIC WATER SERVICE WITHIN EACH UNIT. DOMESTIC WATER MAINS SERVING INDIVIDUAL APARTMENT UNITS SHALL BE 3/4-INCH MINIMUM UNLESS NOTED OTHERWISE. BRANCH PIPING TO INDIVIDUAL FIXTURES SHALL BE SIZED AND INSTALLED IN ACCORDANCE WITH THE PLUMBING FIXTURE SCHEDULE, MANUFACTURER'S REQUIREMENTS, APPLICABLE CODES, AND PROJECT CONDITIONS. CONTRACTOR SHALL COORDINATE FINAL ROUTING WITH ARCHITECTURAL, STRUCTURAL, AND OTHER TRADES PRIOR TO INSTALLATION.

Client:

16-22 Union Street - Apartment Building

Client: Empire Property Construction
16-22 Union St.
Wilkes-Barre, Pa 18701

Consultants:

DMG
design management group
consulting engineers
570 299 7520
dmgeng.com

CAM architect
CAM architect LLC
ARCHITECTS | PLANNERS
606 North Main St. Wilkes-Barre, PA 18705
T | 570| 824.3320
F | 570| 606.4966
www.camarchus.com

© 2026 CAM ARCHITECT

Seals:

PRELIMINARY - NOT FOR CONSTRUCTION
THIS COPY WAS PREPARED BY AN ARCHITECT FOR INFORMATION PURPOSES ONLY AND IS NOT INTENDED FOR CONSTRUCTION OR BIDDING. DO NOT START CONSTRUCTION PRIOR TO THE ISSUANCE OF A SEALED SET OF CONSTRUCTION DOCUMENTS FROM THE ARCHITECT.

Revisions | Issues

No:	Date:

Phase:
PERMIT/PRICING

Project: Apartment Building
Date: 06/15/2026
Drawn: NW
Checked: KJS
Scale: AS NOTED
Sheet: PLUMBING FLOOR PLANS - NEW DOMESTIC WATER

P-6

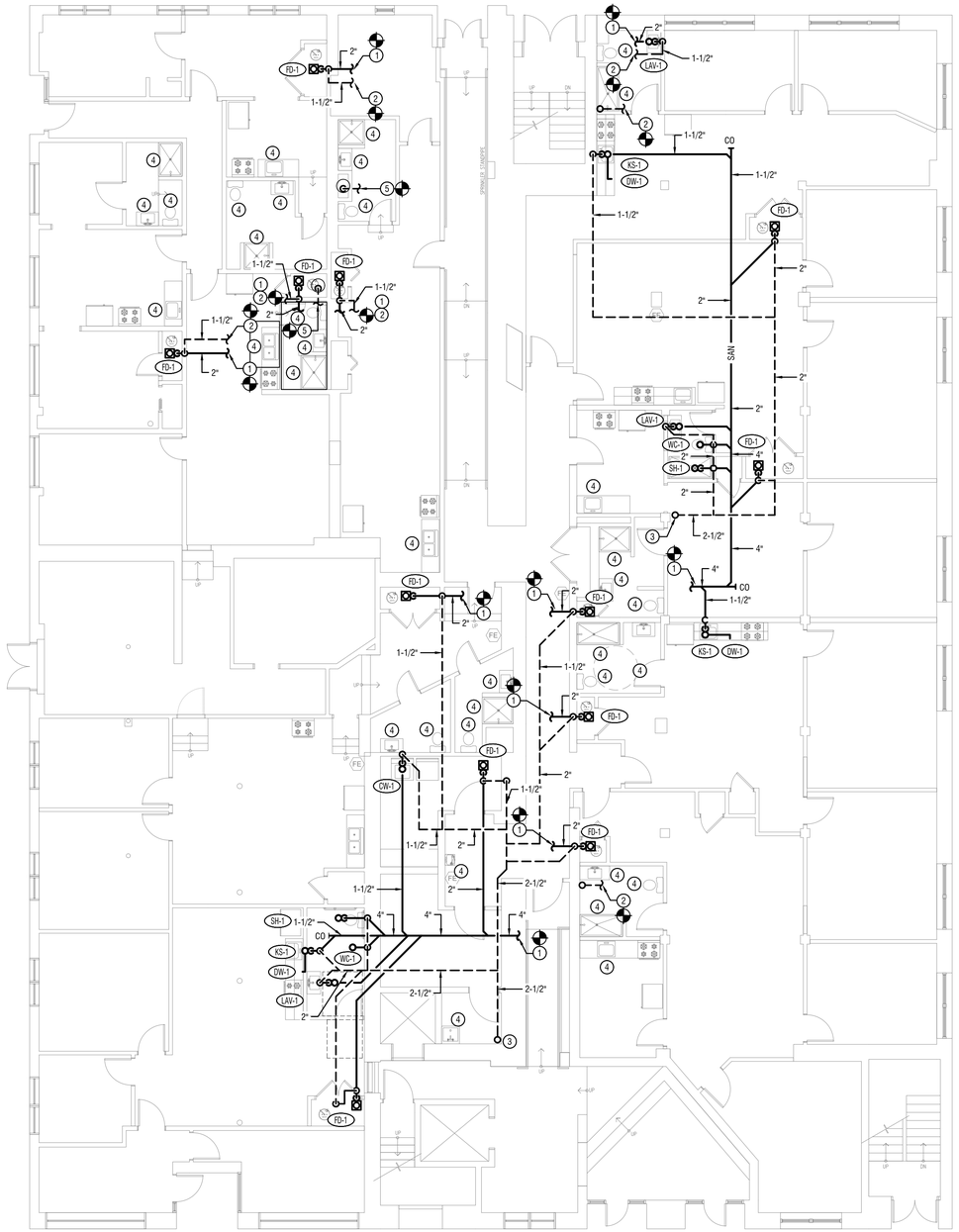

1 P-7 PLUMBING NEW PLAN SANITARY AND VENT - FIRST FLOOR
SCALE: 1/8" = 1'-0"

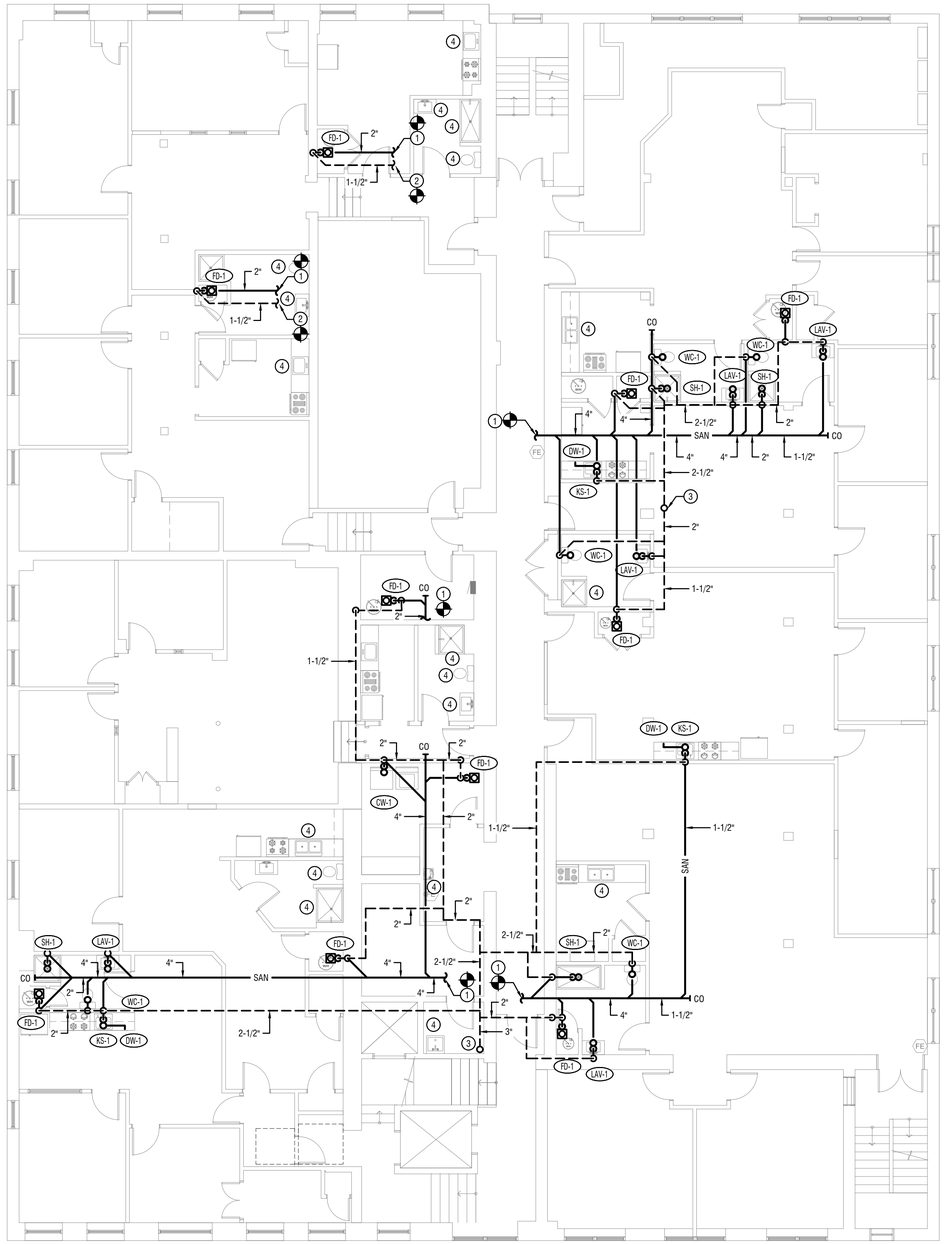

2 P-7 PLUMBING NEW PLAN SANITARY AND VENT - SECOND FLOOR
SCALE: 1/8" = 1'-0"

KEYED CONSTRUCTION NOTES

1. CONNECT NEW SANITARY PIPING BELOW FLOOR LEVEL TO NEAREST ADEQUATELY SIZED EXISTING SANITARY PIPING. FIELD VERIFY EXISTING SANITARY PIPING LOCATIONS, SIZES, CONDITIONS, INVERTS, ETC. PRIOR TO CONSTRUCTION.
2. CONNECT NEW VENT PIPING ABOVE CEILING LEVEL TO NEAREST ADEQUATELY SIZED EXISTING VENT PIPING. FIELD VERIFY EXISTING VENT PIPING LOCATIONS, SIZES, CONDITIONS, INVERTS, ETC. PRIOR TO CONSTRUCTION.
3. 3 INCH VENT RISE UP. COORDINATE FINAL ROUTING LOCATION AND CONCEALING REQUIREMENTS WITH OWNER/ARCHITECT PRIOR TO CONSTRUCTION.
4. EXISTING SANITARY, WASTE, VENT PIPING, AND PLUMBING FIXTURES SHALL BE EVALUATED BY THE CONTRACTOR AND OWNER FOR CONDITION AND REUSE. REUSE EXISTING COMPONENTS WHERE ACCEPTABLE TO THE OWNER AND DETERMINED TO BE IN SERVICEABLE CONDITION. COMPONENTS DEEMED UNSUITABLE FOR REUSE SHALL BE REPLACED IN KIND. RECONNECT REUSED OR REPLACEMENT COMPONENTS TO EXISTING SANITARY AND VENT SYSTEMS AS REQUIRED FOR A COMPLETE AND OPERABLE INSTALLATION.
5. APPROXIMATE LOCATION OF EXISTING GRINDER PUMP AND BASIN FLUSH WITH FIRST FLOOR LEVEL. EXISTING AIR ADMITTANCE VALVE USED FOR BASIN VENTING TO BE REMOVED. EXTEND EXISTING VENT PIPING TO NEAREST ADEQUATELY SIZED VENT PIPING. FIELD VERIFY EXISTING VENT PIPING SIZE, LOCATION, CONDITIONS, ETC. PRIOR TO CONSTRUCTION.

GENERAL CONSTRUCTION NOTES

1. ALL DRAINAGE PIPING 2-1/2" DIAMETER AND SMALLER TO BE PITCHED AT MINIMUM OF 1/4" PER FOOT, 3" TO 6" DIAMETER AT 1/8" PER FOOT, AND 8" AND LARGER AT 1/16" PER FOOT.
2. COORDINATE ANY REQUIRED SAW CUTTING, FLOOR REMOVAL, TRENCHING, PAINTING, PATCHING, FINISHING OF FLOOR, ETC. FOR INSTALLATION OF SANITARY LINES BELOW FLOOR LEVEL WITH OWNER, ARCHITECT, AND G.C. PRIOR TO CONSTRUCTION.
3. ALL VENT PIPING TO BE INSTALLED ABOVE CEILING LEVEL, UNLESS OTHERWISE NOTED. ALL SANITARY PIPING TO BE INSTALLED BELOW FLOOR LEVEL, UNLESS OTHERWISE NOTED.
4. ALL PLUMBING PIPE RISE/DROPS SHALL BE CONCEALED, UNLESS OTHERWISE DIRECTED BY THE OWNER/ARCHITECT. COORDINATE ANY REQUIRED DEMOLITION/REPAIR OF EXISTING WALLS, NEW WALL FUROUTS, PIPE CHASES, ETC. WITH OWNER, ARCHITECT, AND GC PRIOR TO CONSTRUCTION.
5. CONTRACTOR SHALL VERIFY EXISTING SANITARY LINES LOCATION, SIZE, INVERT, CONDITION, ETC. PRIOR TO CONSTRUCTION. REPAIR/REPLACE ANY PIPING DEEMED IN NEED OF REPAIR AS REQUIRED.
6. ALL EXISTING SANITARY PIPING TO BE REUSED SHALL BE VIDEO SCOPED TO ENSURE ADEQUATE CONDITION FOR PROPER OPERATION WITH NEW CONNECTED FIXTURES PRIOR TO CONSTRUCTION. CONTRACTOR SHALL VERIFY EXISTING SANITARY PIPING LOCATIONS, SIZES, CONDITIONS, INVERT, ETC. AND INSPECT PIPING FOR ANY CLOGS, SAGS, CRACKS, DEFECTS, ETC. PRIOR TO CONSTRUCTION.
7. ALL EXISTING PLUMBING FIXTURES AND SANITARY WASTE/VENT PIPING TO BE REUSED SHALL BE FIELD VERIFIED TO BE IN SOUND CONDITION, PROPERLY SLOPED, VENTED, SEALED AND FREE FROM LEAKS, AND INSTALLED IN STRICT ACCORDANCE WITH THE CURRENT IPC.

SANITARY WASTE AND VENT PIPING IS SHOWN SCHEMATICALLY AND IS NOT INDICATED IN ITS ENTIRETY. BREAK LINES ARE PROVIDED FOR CLARITY ONLY. CONTRACTOR SHALL FIELD VERIFY ALL EXISTING SANITARY, WASTE, AND VENT PIPING SIZES, ELEVATIONS, ROUTING, CAPACITIES, CONNECTION POINTS, AND CONDITIONS PRIOR TO COMMENCEMENT OF WORK. CONTRACTOR SHALL PROVIDE ALL PIPING, FITTINGS, OFFSETS, TRANSITIONS, AND CONNECTIONS REQUIRED FOR A COMPLETE AND OPERABLE SYSTEM. FINAL ROUTING AND EXACT POINTS OF CONNECTION TO EXISTING SYSTEMS SHALL BE FIELD COORDINATED. EXISTING PIPING ACCEPTABLE FOR REUSE SHALL REMAIN AND BE REUSED WHERE POSSIBLE. PIPING DETERMINED TO BE DAMAGED, DETERIORATED, OR UNSUITABLE FOR REUSE SHALL BE REPLACED IN KIND AND CONNECTED TO THE EXISTING SYSTEM AS REQUIRED.

Client:
16-22 Union Street - Apartment Building
Client: Empire Property Construction
16-22 Union St.
Wilkes-Barre, Pa 18701

Consultants:
DMG
design management group
consulting engineers
570 299 7520
dmgeng.com

CAM architect
CAM architect, LLC
ARCHITECTS | PLANNERS
606 North Main St. Wilkes-Barre, PA 18705
T | 570| 824.3320
F | 570| 606.4966
www.camarchus.com

© 2026 CAM ARCHITECT

Seals:
PRELIMINARY - NOT FOR CONSTRUCTION
THIS COPY IS FOR PRELIMINARY REVIEW ONLY. DRAWINGS ARE NOT SEALED FOR CONSTRUCTION OR PERMITTING, AND IS NOT INTENDED FOR CONSTRUCTION. SEALED SET OF NOT START CONSTRUCTION WITHOUT THE ARCHITECT OF CONSTRUCTION DOCUMENTS FROM THE ARCHITECT.

Revisions | Issues
No: Date:

Phase:
PERMIT/PRICING

Project: Apartment Building
Date: 06/15/2026
Drawn: NW
Checked: KJS
Scale: AS NOTED
Sheet: PLUMBING FLOOR PLANS - NEW SANITARY AND VENT
P-7

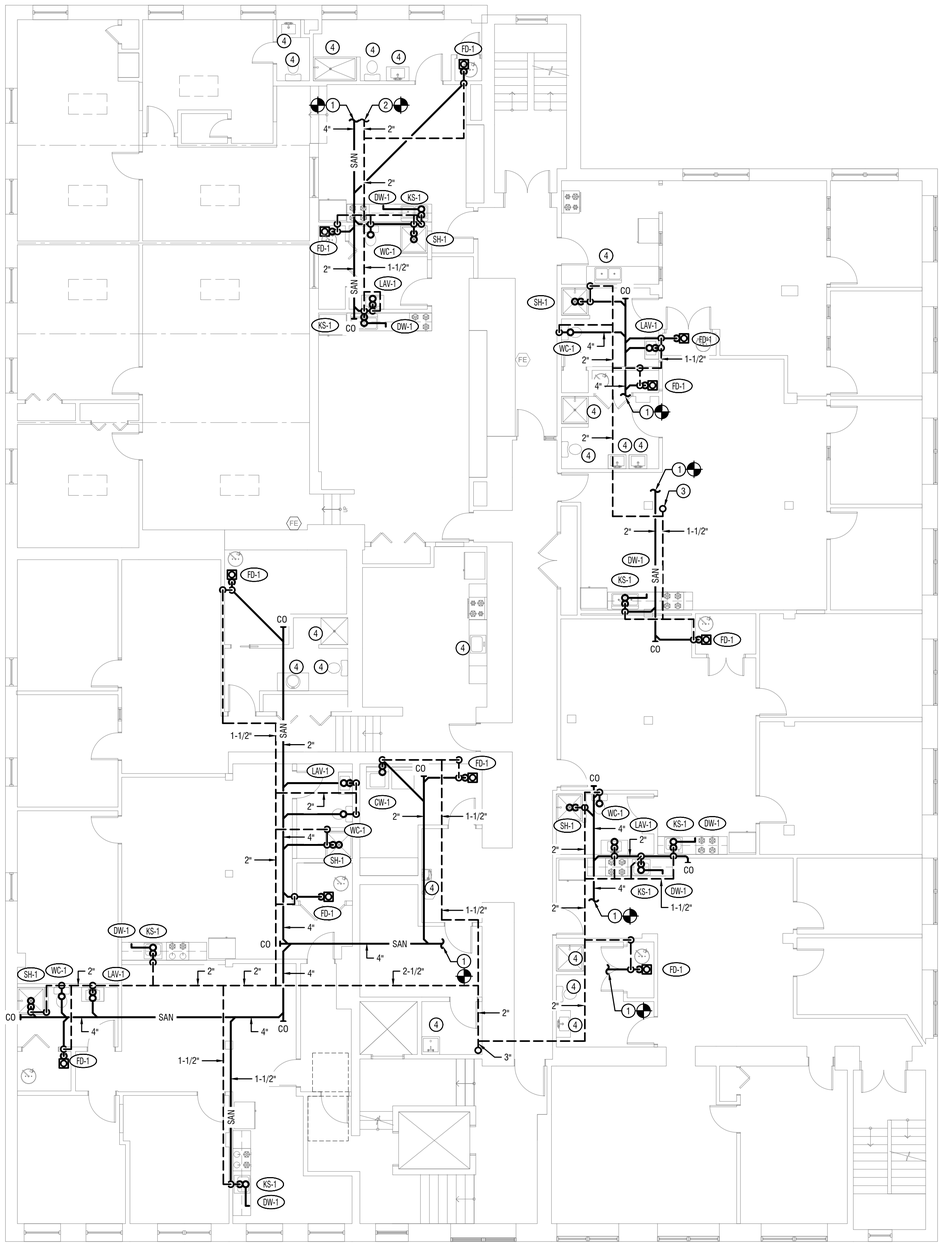

1 P-8 PLUMBING NEW PLAN SANITARY AND VENT - THIRD FLOOR

SCALE: 1/8" = 1'-0"

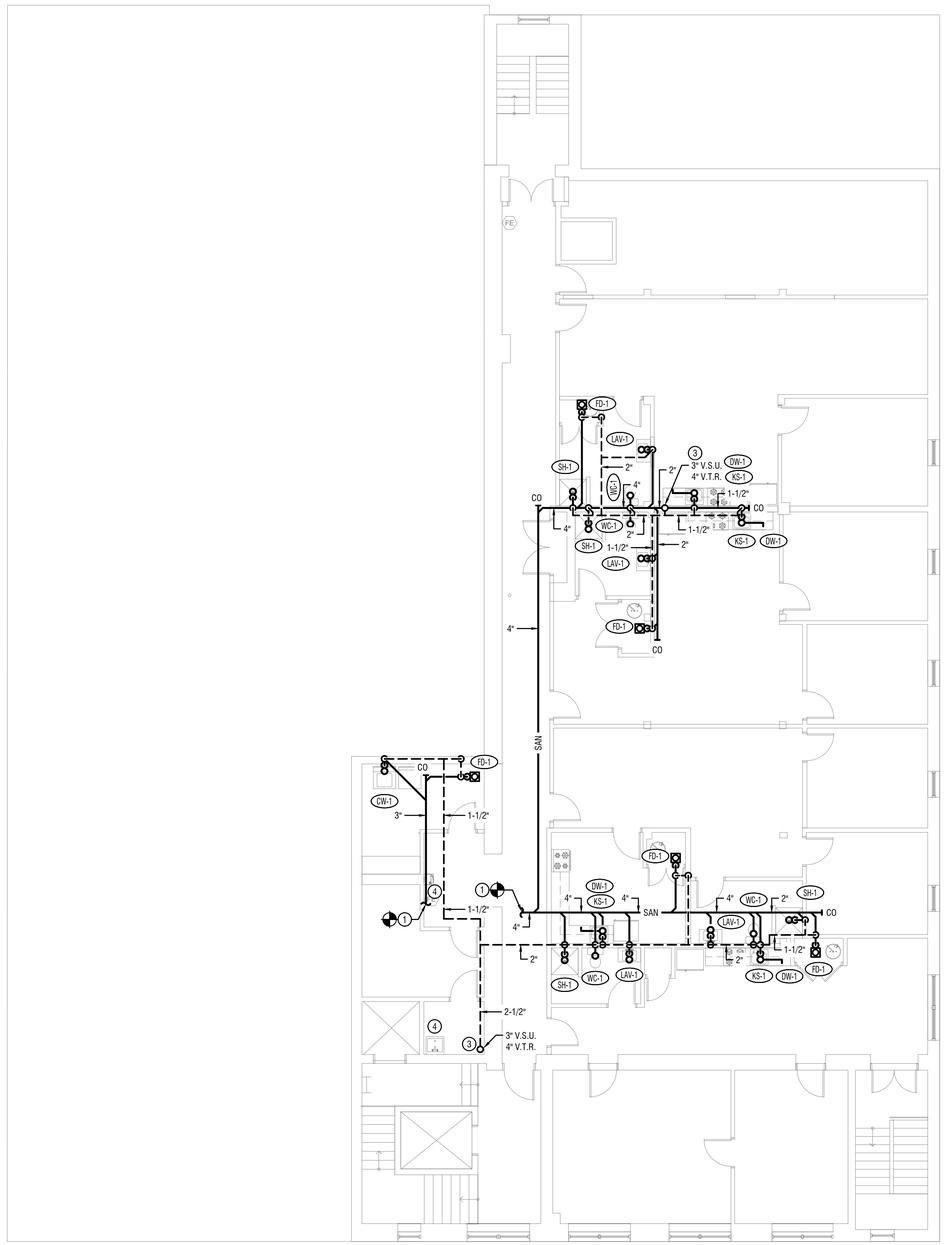

2 P-8 PLUMBING NEW PLAN SANITARY AND VENT - FOURTH FLOOR

SCALE: 1/8" = 1'-0"

KEYED CONSTRUCTION NOTES

1. CONNECT NEW SANITARY PIPING BELOW FLOOR LEVEL TO NEAREST ADEQUATELY SIZED EXISTING SANITARY PIPING. FIELD VERIFY EXISTING SANITARY PIPING LOCATIONS, SIZES, CONDITIONS, INVERTS, ETC. PRIOR TO CONSTRUCTION.
2. CONNECT NEW VENT PIPING ABOVE CEILING LEVEL TO NEAREST ADEQUATELY SIZED EXISTING VENT PIPING. FIELD VERIFY EXISTING VENT PIPING LOCATIONS, SIZES, CONDITIONS, INVERTS, ETC. PRIOR TO CONSTRUCTION.
3. VENT RISE UP FROM FLOOR BELOW. COORDINATE FINAL ROUTING LOCATION AND CONCEALING REQUIREMENTS WITH OWNER/ARCHITECT PRIOR TO CONSTRUCTION.
4. EXISTING SANITARY, WASTE, VENT PIPING, AND PLUMBING FIXTURES SHALL BE EVALUATED BY THE CONTRACTOR AND OWNER FOR CONDITION AND REUSE. REUSE EXISTING COMPONENTS WHERE ACCEPTABLE TO THE OWNER AND DETERMINED TO BE IN SERVICEABLE CONDITION. COMPONENTS DEEMED UNSUITABLE FOR REUSE SHALL BE REPLACED IN KIND. RECONNECT REUSED OR REPLACEMENT COMPONENTS TO EXISTING SANITARY AND VENT SYSTEMS AS REQUIRED FOR A COMPLETE AND OPERABLE INSTALLATION.

GENERAL CONSTRUCTION NOTES

1. ALL DRAINAGE PIPING 2-1/2" DIAMETER AND SMALLER TO BE PITCHED AT MINIMUM OF 1/4" PER FOOT, 3" TO 6" DIAMETER AT 1/8" PER FOOT, AND 8" AND LARGER AT 1/16" PER FOOT.
2. COORDINATE ANY REQUIRED SAW CUTTING, FLOOR REMOVAL, TRENCHING, PAINTING, PATCHING, FINISHING OF FLOOR, ETC. FOR INSTALLATION OF SANITARY LINES BELOW FLOOR LEVEL WITH OWNER, ARCHITECT, AND G.C. PRIOR TO CONSTRUCTION.
3. ALL VENT PIPING TO BE INSTALLED ABOVE CEILING LEVEL, UNLESS OTHERWISE NOTED. ALL SANITARY PIPING TO BE INSTALLED BELOW FLOOR LEVEL, UNLESS OTHERWISE NOTED.
4. ALL PLUMBING PIPE RISE/DROPS SHALL BE CONCEALED, UNLESS OTHERWISE DIRECTED BY THE OWNER/ARCHITECT. COORDINATE ANY REQUIRED DEMOLITION/REPAIR OF EXISTING WALLS, NEW WALL FUROUTS, PIPE CHASES, ETC. WITH OWNER, ARCHITECT, AND GC PRIOR TO CONSTRUCTION.
5. CONTRACTOR SHALL VERIFY EXISTING SANITARY LINES LOCATION, SIZE, INVERT, CONDITION, ETC. PRIOR TO CONSTRUCTION. REPAIR/REPLACE ANY PIPING DEEMED IN NEED OF REPAIR AS REQUIRED.
6. ALL EXISTING SANITARY PIPING TO BE REUSED SHALL BE VIDEO SCOPED TO ENSURE ADEQUATE CONDITION FOR PROPER OPERATION WITH NEW CONNECTED FIXTURES PRIOR TO CONSTRUCTION. CONTRACTOR SHALL VERIFY EXISTING SANITARY PIPING LOCATIONS, SIZES, CONDITIONS, INVERT, ETC. AND INSPECT PIPING FOR ANY CLOGS, SAGS, CRACKS, DEFECTS, ETC. PRIOR TO CONSTRUCTION.
7. ALL EXISTING PLUMBING FIXTURES AND SANITARY WASTE/VENT PIPING TO BE REUSED SHALL BE FIELD VERIFIED TO BE IN SOUND CONDITION, PROPERLY SLOPED, VENTED, SEALED AND FREE FROM LEAKS, AND INSTALLED IN STRICT ACCORDANCE WITH THE CURRENT IPC.

SANITARY WASTE AND VENT PIPING IS SHOWN SCHEMATICALLY AND IS NOT INDICATED IN ITS ENTIRETY. BREAK LINES ARE PROVIDED FOR CLARITY ONLY. CONTRACTOR SHALL FIELD VERIFY ALL EXISTING SANITARY, WASTE, AND VENT PIPING SIZES, ELEVATIONS, ROUTING, CAPACITIES, CONNECTION POINTS, AND CONDITIONS PRIOR TO COMMENCEMENT OF WORK. CONTRACTOR SHALL PROVIDE ALL PIPING, FITTINGS, OFFSETS, TRANSITIONS, AND CONNECTIONS REQUIRED FOR A COMPLETE AND OPERABLE SYSTEM. FINAL ROUTING AND EXACT POINTS OF CONNECTION TO EXISTING SYSTEMS SHALL BE FIELD COORDINATED. EXISTING PIPING ACCEPTABLE FOR REUSE SHALL REMAIN AND BE REUSED WHERE POSSIBLE. PIPING DETERMINED TO BE DAMAGED, DETERIORATED, OR UNSUITABLE FOR REUSE SHALL BE REPLACED IN KIND AND CONNECTED TO THE EXISTING SYSTEM AS REQUIRED.

Client:

16-22 Union Street - Apartment Building

Client: Empire Property Construction
16-22 Union St.
Wilkes-Barre, Pa 18701

Consultants:

DMG
design management group
consulting engineers
570 299 7520
dmgeng.com

CAM architect
CAM architect, LLC
ARCHITECTS | PLANNERS
606 North Main St. Wilkes-Barre, PA 18705
T | 570| 824.3320
F | 570| 606.4966
www.comarchus.com

© 2026 CAM ARCHITECT

Seals:

PRELIMINARY - NOT FOR CONSTRUCTION
THIS DOCUMENT IS LICENSED FOR INFORMATIONAL PURPOSES ONLY AND IS NOT EXTENDED FOR CONSTRUCTION OR RECORDING. DO NOT START CONSTRUCTION WITHOUT A SEALED SET OF CONSTRUCTION DOCUMENTS FROM THE ARCHITECT.

Revisions | Issues

No:	Date:

Phase:
PERMIT/PRICING

Project: Apartment Building
Date: 06/15/2026
Drawn: NW Checked: KJS
Scale: AS NOTED
Sheet: PLUMBING FLOOR PLANS - NEW SANITARY AND VENT

P-8

MAXIMUM HANGER SPACING PER IPC

ITEM	MAXIMUM HORIZONTAL SPACING (FT.)	MAXIMUM VERTICAL SPACING (FT.)
ABS PIPE	4	10
ALUMINUM TUBING	10	15
BRASS PIPE	10	10
CAST IRON	5	15
COPPER OR COPPER-ALLOY PIPE	12	15
COPPER OR COPPER-ALLOY TUBING 1 1/4" DIAMETER OR SMALLER	6	10
COPPER OR COPPER-ALLOY TUBING 1 1/2" DIAMETER OR LARGER	10	10
CROSS-LINKED POLYETHYLENE (PEX) PIPE	2.67 (32 INCHES)	10
CROSS-LINKED POLYETHYLENE/ALUMINU,M/CORSS-LINKED POLYETHYLENE (PEX-AL-PEX) PIPE (PEX) PIPE	2.67 (32 INCHES)	4
CPVC PIPE OR TUBING, 1" OR SMALLER	3	10
CPVC PIPE OR TUBING, 1 1/4" OR LARGER	4	10
STEEL PIPE	12	15
PB PIPE OR TUBING	2.67	4
POLYETHYLENE/ALUMINUM/POLYETHYKENE (PE-AL-PE) PIPE	2.67	4
POLYPROPYLENE (PP) PIPE OR TUBING 1" OR SMALLER	2.67	10
POLYPROPYLENE (PP) PIPE OR TUBING 1 1/4" OR LARGER	4	10
PVC PIPE	4	10
STAINLESS STEEL DRAINAGE SYSTEMS	10	10

NOTES:

1. PIPE HANGERS SHALL ENCIRCLE PIPE INSULATION.
2. PROVIDE MAXIMUM HANGER SPACING AS PER THE SCHEDULE ABOVE OF PER SPECIFICATIONS WHICH EVER IS MORE STRINGENT.

PLUMBING FIXTURE INSULATION SCHEDULE

PIPING	INSULATION TYPE	INSULATION THICKNESS		NOTES
		LESS THAN 1 1/2" DIA.	1 1/2" DIA. AND LARGER	
DOMESTIC COLD WATER	FIBERGLASS	1/2"	1"	1, 2, 3, 4, & 5
DOMESTIC HOT WATER	FIBERGLASS	1"	1 1/2"	1, 2, 3, 4, & 5
DOMESTIC HOT WATER RETURN	FIBERGLASS	1"	1 1/2"	1, 2, 3, 4, & 5

NOTES:

1. INSULATE PIPING PER SECTION OF THE INTERNATIONAL ENERGY CONSERVATION CODE (IECC). CONDUCTIVITY NOT TO EXCEED 0.27 BTU PER/IN*FT2*F°.
2. INSULATION SHALL BE APPLIED BY AN EXPERIENCED PERSONNEL IN ACCORDANCE WITH BEST TRADE PRACTICE GUIDED BY MANUFACTURER'S PRINTED INSTALLATION INSTRUCTION/DIRECTIONS
3. INSULATION SHALL BE MANVILLE MICRO-LOK FIBERGLASS PIPE INSULATION TYPE AP-T OR APPROVED EQUAL.
4. ALL INSULATION JACKETS, FACING AND ADHESIVES USED TO ADHERE JACKET OR FACING TO THE INSULATION, INCLUDING FITTING AND BUTT STRIPS SHALL HAVE NON-COMBUSTIBLE FIRE AND SMOKE HAZARD RATING AND LABEL AS TESTED BY ASTM-84-91A, NFPA 255 AND UL 723 NOT EXCEEDING FLAME SPREAD OF 25 AND SMOKE DEVELOPED OF 50.
5. FITTING AND VALVES SHALL BE INSULATED WITH MANVILLE FACTORY PERCUT HI-LO TEMP FIBERGLASS INSULATION AND ZESTON 25/50 RATED OVC INSULATION FITTING COVERS. EPOLUX 670 WHITE VAPOR BARRIER COATING, OR APPROVED EQUAL, SHALL BE APPLIED AROUND THE EDGES OF THE ADJOINING PIPE INSULATION AND ON THE FITTING COVER THROAT OVERLAP SEAM. THE FITTING COVER SHALL BE SECURED WITH PRESSURE SENSITIVE PEARL GRAY Z-TAPE ALONG THE CIRCUMFERENTIAL EDGES. THE TAPE SHALL EXTEND ALL OVER THE ADJACENT PIPE INSULATION WITH AN OVERLAP ON ITSELF OF 2". ALL INSULATION MATERIAL SHALL COMPLY WITH THE NEW WORK BUILDING CODE REQUIREMENTS.

PLUMBING FIXTURE SCHEDULE

TAG	FIXTURE	FIXTURE		C.W.	H.W.	W.	TRAP	V.	TRIM	TRIM		SPECIFICATION
		MODEL	MODEL							MANUFACTURER	MODEL	
WC-1	WATER CLOSET ADA (FLUSH TANK)	AMERICAN STD.	270AA.001	1/2"	-	4"	-	2"	SEAT	AMERICAN STD.	5905.100SS	FLUSH TANK ELONGATED VITREOUS CHINA TOILET. LOW CONSUMPTION (1.6 GPF), CADET FLUSHING SYSTEM, EVERCLEAN SURFACE, CHROME FINISH TRIP LEVER. ELONGATED HEAVY DUTY BOWL OPEN FRONT SEAT LESS COVER WITH SELF SUSTAINING HINGE. MOUNTED AT ADA COMPLAINT HEIGHT.
LAV-1	COUNTERTOP LAVATORY ADA	AMERICAN STD.	0476.028	1/2"	1/2"	1 1/2"	1 1/2"	1 1/2"	FAUCET	AMERICAN STD.	7508201.002	COUNTERTOP VITREOUS CHINA SINK, SELF-RIMMING WITH CUTOUT TEMPLATE SUPPLIED. FRONT OVERFLOW, FAUCET LEDGE. NOMINAL DIMENSIONS 20-3/8" X 17-3/8". MANUAL CONTROL CENTERSET LAVATORY FAUCET ON 4" CENTERS. METAL LEVER HANDLES, POP-UP DRAIN, POLISHED CHROME FINISH. 1.2 GPM MAXIMUM FLOW RATE.
SH-1	SHOWER UNIT	-	-	1/2"	1/2"	1 1/2"	1 1/2"	1 1/2"	-	-	-	COORDINATE PURCHASE/SPECIFICATION OF FIXTURE AND TRIM WITH OWNER AND ARCHITECT. PLUMBING SUPPLIES TO BE INSTALLED BY PC.
KS-1	KITCHEN SINK	AMERICAN STD.	18SB6231800S.075	1/2"	1/2"	1 1/2"	1 1/2"	1 1/2"	FAUCET	AMERICAN STD.	4332.350.F15	23" X 18" ADA SINGLE BOWL 18 GAUGE STAINLESS STEEL KITCHEN SINK, 6" DEP'TH WITH OFFSET DRAIN, UNDERMOUNT INSTALLATION, LIMITED LIFETIME WARRANTY. FAUCET SHALL BE SINGLE CONTROL KITCHEN FAUCET, SEMI-PROFESSIONAL. FORGED BRASS BODY WITH BRASS SWIVEL SPOUT (150° ROTATION) AND SWING ARM. METAL LEVER HANDLE. PULL-DOWN SPRAY WITH ADJUSTABLE SPRAY PATTERN AND PUSH BUTTON ACTIVATION. METAL REINFORCED HOSE WITH STAINLESS STEEL PROTECTOR COIL. WASHERLESS 40MM CERAMIC DISC VALVE CARTRIDGE. BRASS MOUNTING SHANK WITH BRASS FIXATION RING. COMPLETE WITH TWO INTEGRAL CHECK VALVES. BRAIDED FLEXIBLE SUPPLY HOSES WITH 3/8" COMPRESSION CONNECTORS
MS-1	JANITORS SINK/MOP BASIN	ACORN	TDF-24	3/4"	3/4"	3"	3"	2"	FAUCET	AMERICAN STANDARD	8351.076	MOP SINK SHALL BE MADE OF PRECAST TERAZZO TO PRODUCE A COMPRESSIVE STRENGTH OF AT LEAST 3000 PSI SEVEN DAYS AFTER CASTING. ALL EXPOSED SURFACES SHALL BE GROUND SMOOTH AND SEALED. NO AIR HOLES OR PITS SHALL BE ALLOWED ON THE FINISHED SURFACE. SINK SHALL HAVE COVED CORNERS AND BE PITCHED TO THE DRAIN OUTLET FOR POSITIVE DRAINAGE. INTEGRAL DRAIN SHALL HAVE A STAINLESS STEEL STRAINER AND PROVIDE FOR AN INSIDE CAULKED CONNECTION TO A 3" PIPE. 3" CAST BRASS SPOUT, EXPOSED YOKE WALL-MOUNT UTILITY FAUCET SHALL FEATURE A CAST BRASS BODY WITH INTEGRAL STOPS. CAST BRASS SPOUT WITH BUCKET HOOK AND VANDAL-RESISTANT METAL LEVER HANDLES. SHALL ALSO FEATURE A 1/4 TURN WASHERLESS CERAMIC DISC VALVE CARTRIDGES.
DW-1	DISHWASHER	-	-	-	1/2"	1 1/2"	1 1/2"	1 1/2"	-	-	-	COORDINATE SPECIFICATION AND PURCHASE OF FIXTURE WITH OWNER AND ARCHITECT. PLUMBING SUPPLIES TO BE INSTALLED BY PC.
CW-1	CLOTHES WASHER	-	-	1/2"	1/2"	2"	2"	1 1/2"	OUTLET BOX	SIOUX CHIEF	696	COORDINATE SPECIFICATION AND PURCHASE OF FIXTURE WITH OWNER AND ARCHITECT. PLUMBING SUPPLIES TO BE INSTALLED BY PC. PROVIDE WASHING MACHINE BOX MOUNTED WITHIN WALL BEHIND FIXTURE. UNIT SHALL ALLOW FOR MOUNTING WITH SUPPLY LINES FROM TOP OR BOTTOM, ON-STUD OR BETWEEN-STUDS. SUPPLY AND DRAIN BOXES CAN BE CONNECTED USING PROVIDED GALVANIZED U-CLIP OR SEPARATED AS DESIRED. SUPPLY BOX CAN BE INVERTED. ARRESTER VARIATIONS CAN BE INSTALLED WITH ARRESTERS AT ANY ANGLE. UNIT SHALL BE AVAILABLE WITH ¼-TURN VALVES. METAL SUPPORT BRACKET SHALL INSTALL INTO TOP/BOTTOM TRACKS OF BOX.
FD-1	FLOOR DRAIN (GENERAL USE, SHOWER)	JAY R. SMITH	2005	-	-	2"	2"	1 1/2"	-	-	-	GENERAL SERVICE FLOOR DRAIN FOR USE IN SHOWERS, TOILETS, KITCHENS AND OTHER FINISHED AREAS WHERE FOOT TRAFFIC IS EXPECTED. THE ROUND TOP STRAINER HEAD IS USED FOR ALL TYPES OF POURED FINISHED FLOORS. THE SQUARE TOP IS PARTICULARLY ADAPTABLE TO FLOORS THAT ARE FINISHED IN MATERIAL OF SQUARE OR STRAIGHT LINE PATTERN. REVERSIBLE FLASHING COLLAR PERMITS ADJUSTMENT OF THE STRAINER TO MEET FINISHED FLOOR LEVEL.
FCO	FLOOR CLEANOUT	JAY R. SMITH	4020	-	-	VARIES	VARIES	-	-	-	-	DUCO CAST IRON CLEANOUT WITH ROUND ADJUSTABLE SCORIATED SECURED NICKEL BRONZE TOP WITH BRONZE CLOSURE PLUG.

NOTES:

1. ALL FIXTURES SHALL BE PROVIDED WITH SUPPLIES AND STOPS. PROVIDE DRAINS, STRAINERS, TRAPS AND TAIL PIECES AS REQUIRED. WHERE ADA ACCESSIBILITY IS INDICATED, PROVIDE OFFSET TAIL PIECES. ALL EXPOSED TRAP AND DRAIN PIPING SHALL BE INSULATED OR PROVIDED WITH AN INSUALATED SHROUDING SYSTEM AS MANUFACTURED BY TRUBERO OR EQUAL.
2. WATER CLOSETS SHALL BE PROVIDED WITH MATCHING SEATS WITH SELF SUSTAINING CHECK HINGES AND ANTI-MICROBIAL COATINGS
3. FLOOR DRAINS SHALL BE PROVIDED WITH TRAPS AND TRAP SEALS UNLESS A PRIMING SYSTEM IS EXPLICITLY INDICATED ON THE DRAWINGS.
4. ALL WALL HUNG FIXTURES SHALL BE PROVIDED WITH THE APPROPRIATE CARRYING DEVICE AS MANUFACTURED BY JAY R. SMITH OR EQUAL.
5. PROVIDE ACORN ST70 ASSE ANTI-SCALD VALVES (TEMPERED WATER/ MAX 110 °F) ON ALL HOT WATER FIXTURES EXCEPT FOR KITCHEN EQUIPMENT, MOP AND SERVICE SINKS, SPECIAL CLEANING DEVICES (HOT WATER HOSE BIBS OR HYDRANTS), OR LAUNDRY EQUIPMENT.
6. COORDINATE FINAL SELECTIONS AND FINISHES OF ALL PLUMBING FIXTURES WITH OWNER AND ARCHITECT PRIOR TO PURCHASE.

THERMAL EXPANSION TANK SCHEDULE

TAG	BASIS OF DESIGN		SERVICE ZONE	ACCEPTABLE VOLUME	CONNECTION SIZE	SIZE DIA." x H"	NOTES
	MANUFACTURER	MODEL					
ET-1	AMTROL	ST-12	WH-1, WH-2	3.2 GAL	3/4"	12x8	1,2,3,4

NOTES:

1. CONSTRUCTION SHALL BE FACTORY FABRICATED STEEL, WELDED TO TANK BEFORE TESTING AND LABELING. INCLUDING ASME B1.20.1, PIPE THREAD.
2. COMPLY WITH NSF 61 BARRIER MATERIALS FOR POTABLE-WATER TANK LININGS, INCLUDING EXTENDING FINISH INTO AND THROUGH TANK FITTINGS.
3. FACTORY INSTALLED AIR CHARGING VALVE.
4. WORKING PRESSURE RATING 150 PSIG, AIR PRECHARGE PRESSURE: 55 PSIG

ELECTRIC WATER HEATER SCHEDULE

TAG	BASIS OF DESIGN		TYPE	TANK CAPACITY	TOTAL WATTAGE INPUT (KW)	RECOVERY GPH @ TEMP RISE °F	CONNECTIONS		VOLTS/PH/Hz	NOTES
	MANUFACTURER	MODEL					INLET	OUTLET		
WH-1	AO SMITH	DEN-52	STORAGE	55	4.5	18 GPH @ 100 °F	3/4"	3/4"	208/1/60	1,2,3,4,5

NOTES:

1. FURNISHED WITH ALL STANDARD EQUIPMENT INCLUDING TEMPERATURE AND PRESSURE (T&P) RELIEF VALVE.
2. THE HEATER WILL BE FACTORY ASSEMBLED AND TESTED REQUIRING ONLY CONNECTIONS TO THE ELECTRIC AND PLUMBING SYSTEM.
3. THE HEATER WILL HAVE (2) IMMERSION HEATING ELEMENTS. WATER HEATERS WH-1 AND WH-2 HEATING ELEMENTS SHALL BE WIRED TO OPERATE NON SIMULTANEOUSLY, WHILE WH-3 SHALL BE WIRED TO OPERATE SIMULTANEOUSLY. COORDINATE WIRING WITH MANUFACTURER AND E.C. PRIOR TO PURCHASE.
4. PROVIDE ACORN MV-17-1 (TMV-1) MASTER MIXING VALVE ROUGH BRONZE WITH ALL STANDARD EQUIPMENT INCLUDING PARAFFIN COPPER ACTUATOR, HEAVY DUTY COMBINATION STRAINER, CHECKSTOPS AND TAMPER RESISTANT TEMPERATURE ADJUSTABLE CONTROL.
5. VERIFY TEMPERATURE SETTING WITH OWNER (SET TO DELIVER 110°F WATER TEMPERATURE).

Client:
16-22 Union Street - Apartment Building
Client: Empire Property Construction
16-22 Union St.
Wilkes-Barre, Pa 18701

Consultants:
DMG
design management group
consulting engineers
570 299 7520
dmgeng.com

CAM architect
CAM architect LLC
ARCHITECTS | PLANNERS
606 North Main St. Wilkes-Barre, PA 18705
T | 570| 824.3320
F | 570| 606.4966
www.camarchus.com
© 2026 CAM ARCHITECT

Seals:
PRELIMINARY - NOT FOR CONSTRUCTION
THE CONTRACTOR IS PERMITTED TO USE THIS DOCUMENT FOR PRICING PURPOSES ONLY AND IS NOT INTENDED FOR CONSTRUCTION OR BIDDING. DO NOT START CONSTRUCTION WITHOUT A SEALED SET OF CONSTRUCTION DOCUMENTS FROM THE ARCHITECT

Revisions | Issues
No: Date:

Phase:
PERMIT/PRICING

Project: Apartment Building
Date: 06/15/2026
Drawn: NW Checked: KJS
Scale: AS NOTED
Sheet:
PLUMBING SCHEDULES
P-9

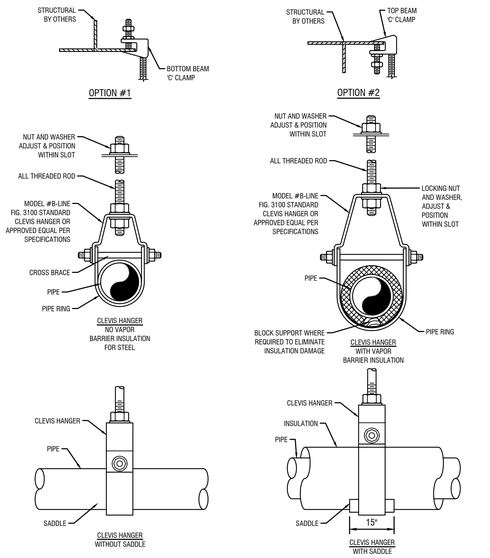

NOTES:
1. PIPE HANGER AND ROD SHALL BE GALVANIZED STEEL EXCEPT HANGERS FOR COPPER PIPING SHALL BE COPPER COATED.
2. FOR COPPER TUBING USE PLASTIC COATED B3100C OR APPROVED EQUAL
3. COORDINATE SLOT LOCATIONS WITH HANGERS

1 / P-10 TYPICAL SUSPENDED PIPE HANGER DETAIL (JOIST/BEAM)
SCALE: NOT TO SCALE

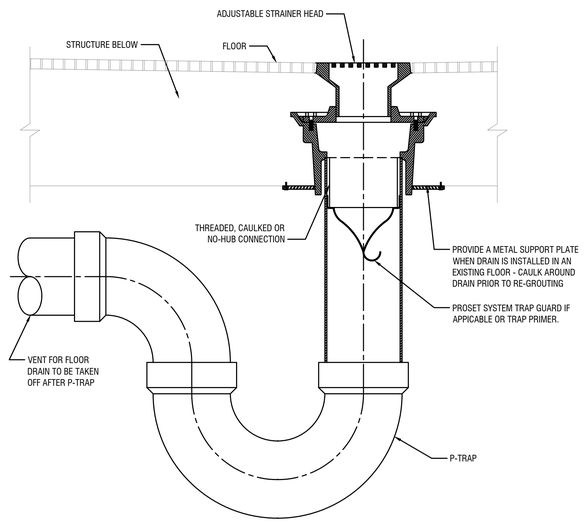

2 / P-10 TYPICAL FLOOR DRAIN DETAIL
SCALE: NOT TO SCALE

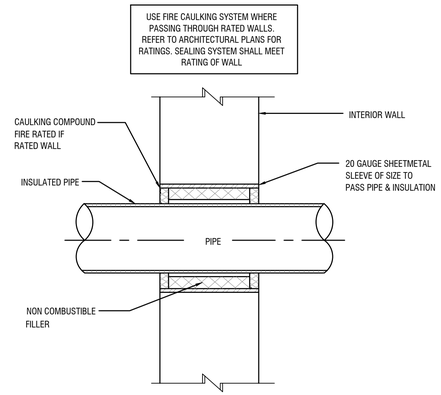

3 / P-10 PIPING THROUGH INTERIOR WALL DETAIL
SCALE: NOT TO SCALE

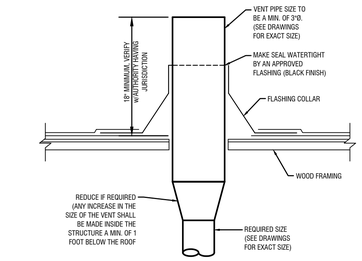

NOTES:
1. AN OPEN VENT TERMINAL FROM A DRAINAGE SYSTEM SHALL NOT BE LOCATED DIRECTLY BENEATH ANY DOOR, OPERABLE WINDOW, OR OTHER INTAKE OPENING OF THE BUILDING OR OF AN ADJACENT BUILDING, AND ANY SUCH VENT TERMINAL SHALL NOT BE WITHIN 10 FEET HORIZONTALLY OF SUCH AN OPENING UNLESS IT IS AT LEAST 2 FEET ABOVE THE TOP OF SUCH OPENING
2. FOLLOW ROOF MANUFACTURER'S FLASHING INSTRUCTIONS WHERE REQUIRED MANUFACTURER'S WARRANTY

4 / P-10 VENT PIPE THROUGH ROOF DETAIL
SCALE: NOT TO SCALE

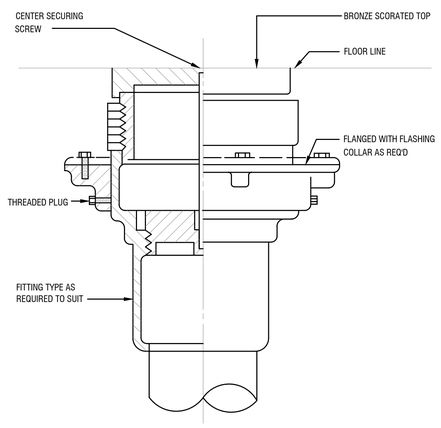

5 / P-10 FINISHED FLOOR CLEANOUT DETAIL
SCALE: NOT TO SCALE

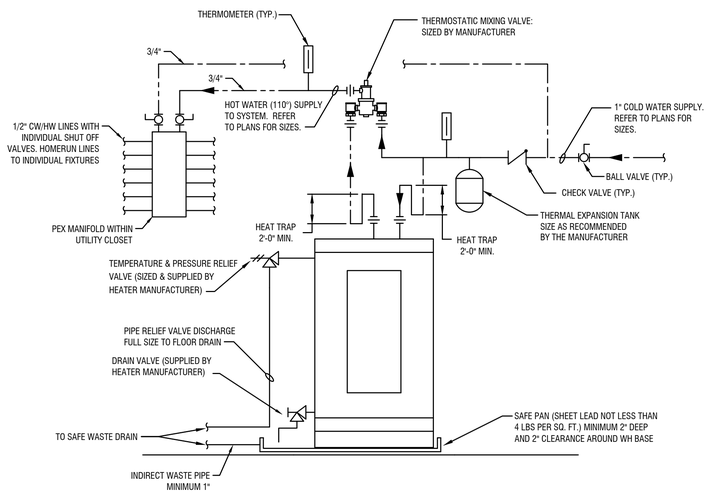

6 / P-10 ELECTRIC HOT WATER HEATER DETAIL
SCALE: NOT TO SCALE

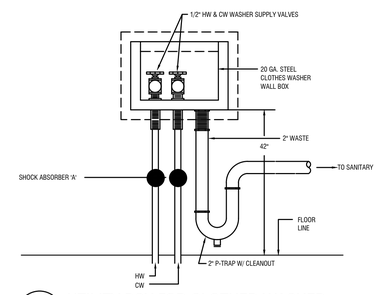

7 / P-10 UTILITY BOX FOR CLOTHER WASHER
SCALE: NOT TO SCALE

Client:
16-22 Union Street - Apartment Building
Client: Empire Property Construction
16-22 Union St.
Wilkes-Barre, Pa 18701

Consultants:
DMG
design management group
consulting engineers
570 299 7520
dmgeng.com

CAM architect
CAM architect, LLC
ARCHITECTS | PLANNERS
606 North Main St. Wilkes-Barre, PA 18705
T | 570| 824.3320
F | 570| 606.4966
www.camarchus.com

© 2026 CAM ARCHITECT

Seals:
PRELIMINARY - NOT FOR CONSTRUCTION
THIS DOCUMENT IS PRELIMINARY IN NATURE AND IS INTENDED FOR REVIEW PURPOSES ONLY. IT IS NOT INTENDED FOR CONSTRUCTION, BIDDING OR PERMITTING. ANY USE OF THIS DOCUMENT FOR CONSTRUCTION WITHOUT THE SEAL OF A REGISTERED ARCHITECT IS STRICTLY PROHIBITED.

Revisions | Issues
No: Date:

Phase:
PERMIT/PRICING

Project: Apartment Building
Date: 06/15/2026
Drawn: NW
Checked: KJS
Scale: AS NOTED
Sheet:
PLUMBING DETAILS

P-10

Pennsylvania American Water
2699 Stafford Ave., Scranton, PA 18505

REPORT ON FLOW TEST

12" MAIN ON E. Union St (Street/Ave./Rd./Ln.), W/B (Municipality)

DATE: 3-4-26
TIME: 6:00 PM

FLOW HYDRANT NO. H4BC-518
HYDRANT LOCATION:
N. Washington & E. Union St.

RESIDUAL HYDRANT NO. H4BC-222
HYDRANT LOCATION:
46 N Washington St.

FLOW:
STATIC PRESSURE 80 PSI
1. PITOT PRESSURE ____ PSI 1250 GPM
2. PITOT PRESSURE ____ PSI ____ GPM

RESIDUAL:
STATIC PRESSURE 90 PSI
1.RESIDUAL PRESSURE 75 PSI
2.RESIDUAL PRESSURE ____ PSI

COMMENTS:

TEST TEAM: Dicton

SUPERVISOR: Vital

The results are representative of the distribution system flow capabilities and fire flow capacity at the time of the test and do not take into account normal fluctuations within the distribution system that may occur in the future.

APPX. EXISTING BUILDING OUTLINE (FINISHED FLOOR ELEVATION APPX. 552.0')

RESIDUAL HYDRANT (ELEVATION APPX. 551.0')

FLOW HYDRANT (ELEVATION APPX. 549.0')

FIRE PROTECTION LEGEND

NOT ALL SYMBOLS ARE USED ON DRAWINGS

- FSP — FIRE STANDPIPE SUPPLY LINE
- SP — SPRINKLER LINE
- PENDANT DRY PIPE SPRINKLER HEAD
- R — R = RELOCATED/REUSED
- SEMI-RECESSED WET PIPE SPRINKLER HEAD
- CONCEALED WET PIPE SPRINKLER HEAD
- UPRIGHT WET PIPE SPRINKLER HEAD
- SIDEWALL WET PIPE SPRINKLER HEAD
- D — SIDEWALL DRY PIPE SPRINKLER HEAD
- EC — EC = EXTENDED COVERAGE SIDEWALL HEAD
- BACKFLOW PREVENTER
- FLOW ALARM SWITCH
- OS&Y VALVE
- PRESSURE REDUCING VALVE
- RISER CONTROL VALVE w/MONITOR SWITCH
- FIRE DEPARTMENT CONNECTION
- FIRE DEPARTMENT SIAMESE CONNECTION
- FIRE DEPARTMENT CONNECTION
- WATER MOTOR ALARM
- FIRE DEPARTMENT VALVE
- FIRE DEPARTMENT VALVE CABINET
- DELUGE VALVE
- ALARM CHECK VALVE
- EXISTING TO BE REMOVED
- TS — TAMPER SWITCH
- FS — FLOW SWITCH

COORDINATION NOTE

THE HVAC, PLUMBING, AND ELECTRICAL CONTRACTORS SHALL BE AWARE THAT THE CEILING HEIGHTS, SOFFITS AND SPACE CONDITIONS ON THIS PROJECT ARE CRITICAL AND SPACE ALLOCATION MUST BE COORDINATED BETWEEN ALL TRADES AND MAINTAINED. EACH CONTRACTOR OR TRADE SHALL REFER TO THE STRUCTURAL AND ARCHITECTURAL DRAWINGS IN ADDITION TO THE HVAC, PLUMBING, AND ELECTRICAL DRAWINGS TO DETERMINE ACCEPTABLE LAYERING OF ALL EQUIPMENT.

PRIME CONTRACT NOTE

THIS PROJECT IS SELF PRIME CONTRACTS. THE F.P.C. SHALL BE RESPONSIBLE FOR ALL CUTTING PATCHING, ETC. FOR THEIR WORK. THE F.P.C. SHALL MEET, REPORT WORK PROGRESS, ALL SHUTDOWNS, ETC. WITH OWNER. F.P.C. SHALL COORDINATE WITH ALL OTHER TRADES. SEE FRONT END SPECIFICATIONS FOR DETAILS.

HAZARD OCCUPANCY LEGEND

LH	NFPA-13 LIGHT HAZARD - 0.10 GPM/SF DESIGN DENSITY, 225 SF MAX SPRINKLER PROTECTION AREA, 15 FT MAX SPRINKLER SPACING.
OH1	NFPA-13 ORDINARY HAZARD GROUP 1 - 0.15 GPM/SF DESIGN DENSITY, 130 SF MAX SPRINKLER PROTECTION AREA, 15 FT MAX SPRINKLER SPACING.
OH2	NFPA-13 ORDINARY HAZARD GROUP 2 - 0.20 GPM/SF DESIGN DENSITY, 130 SF MAX SPRINKLER PROTECTION AREA, 15 FT MAX SPRINKLER SPACING.
EH1	NFPA-13 EXTRA HAZARD GROUP 1 - 0.30 GPM/SF DESIGN DENSITY, 100 SF MAX SPRINKLER PROTECTION AREA, 12 FT MAX SPRINKLER SPACING.
EH2	NFPA-13 EXTRA HAZARD GROUP 2 - 0.40 GPM/SF DESIGN DENSITY, 100 SF MAX SPRINKLER PROTECTION AREA, 12 FT MAX SPRINKLER SPACING.
RES	RESIDENTIAL SPRINKLER HEADS - FLOW CHARACTERISTICS, AREAS OF COVERAGE, MAXIMUM DISTANCES BETWEEN SPRINKLERS, ETC. INSTALLED IN CONFORMANCE WITH THEIR MANUFACTURER'S LISTING.

SPRINKLER DESIGN CRITERIA AND NOTES

1. ALL AREAS OF THE RENOVATION SHALL BE FULLY SPRINKLERED BY MODIFYING EXISTING HEAD LOCATIONS AND/OR ADDING HEADS AS NECESSARY.
2. ALL FIRE PROTECTION WORK SHALL MEET THE REQUIREMENTS OF NFPA 13 AND ALL LOCAL ORDINANCES.
3. SPRINKLER PROTECTION: TO DETERMINE SPACING, DENSITY, AND HOSE STREAM ALLOWANCE, APPLY THE FOLLOWING COVERAGE CLASSIFICATIONS.
   A. LIGHT HAZARDS OCCUPANCIES: CLASSROOMS OFFICES, LOBBIES, WAITING ROOMS, TOILET ROOMS, CORRIDORS, AND CUSTOMARY ACCESS AREAS.
   B. ORDINARY HAZARD GROUP 1 OCCUPANCIES: MECHANICAL EQUIPMENT ROOMS, TRANSFORMER ROOMS, ELECTRICAL ROOMS, ELECTRIC CLOSETS, ELEVATOR SHAFTS, ELEVATOR MACHINE ROOMS AND FILE STORAGE.
   C. ORDINARY HAZARD GROUP 2 OCCUPANCIES: STORAGE ROOMS, TRASH ROOMS, CLEAN AND SOILED LINEN ROOMS STORAGE AREAS, CLEAN AND SOILED UTILITY ROOMS, JANITOR CLOSETS, BUILDING MANAGEMENT STORAGE, FILE STORAGE AREAS FOR THE ENTIRE AREA OF THE SPACE UP TO 140 SQUARE METERS (1500 SQUARE FEET).
4. HYDRAULICALLY CALCULATED WET PIPE SYSTEMS: AUTOMATIC SPRINKLERS THROUGHOUT ENTIRE AREA(S) SHALL BE INSTALLED AS HYDRAULICALLY CALCULATED SYSTEMS TO PROVIDE THE MINIMUM REQUIRED DENSITY TO THE HYDRAULICALLY MOST REMOTE AREA BASED ON OCCUPANCY CLASSIFICATION. THE HEAD COVERAGE SHALL EXCEED NFPA-13 LIMITATIONS.
5. HYDRAULICALLY CALCULATED WET SPRINKLER SYSTEMS SHALL INCLUDE AN INTERIOR AND EXTERIOR HOSE ALLOWANCE BASED ON OCCUPANCY CLASSIFICATION AS REQUIRED BY NFPA 13.
6. COORDINATE ALL FIRE PROTECTION WORK WITH ARCHITECTURAL REFLECTED CEILING PLANS, HVAC DUCTWORK AND DIFFUSER LOCATIONS AND ELECTRICAL LIGHTING LOCATIONS. RELOCATE EXISTING PIPING SHOWN TO REMAIN AS NECESSARY.
7. THE SPRINKLER TRADE SHALL COORDINATE SPRINKLER HEAD AND PIPING LAYOUT WITH LIGHTING, DIFFUSER AND DUCTWORK LAYOUTS. LIGHTING, DIFFUSERS AND DUCTWORK SHALL TAKE PRECEDENCE OVER THE SPRINKLER SYSTEM.
8. SPRINKLER HEADS SHALL HAVE A 1/2" NOMINAL ORIFICE AND A TEMPERATURE RATING OF 165°F. SPRINKLER HEADS LOCATED NEAR HEAT PRODUCING EQUIPMENT IN AREAS SUBJECT TO HIGH TEMPERATURES, THE SPRINKLER HEADS SHALL HAVE A TEMPERATURE RATING OF 212°F. ALL SPRINKLER HEADS SHALL BE QUICK RESPONSE TYPE.
9. SPRINKLERS SHALL BE PROVIDED IN THE FOLLOWING AREAS WHETHER OR NOT REQUIRED BY THE CODES:
   - MECHANICAL ROOM
   - CLOSET
   - VESTIBULES
   - STAIRWELLS - TOP, BOTTOM AND INTERMEDIATE LANDING AND IN ENCLOSED SPACES UNDER STAIRS AND UNDER WALKWAYS.
   - UNDER WIDE (48" AND WIDER) DUCTS AND AC EQUIPMENT.
   - ENCLOSED COMBUSTIBLE SPACES.
   - ALL LOCATIONS COVERED BY NFPA CODE 13, CHAPTER 4
   - ABOVE AND BELOW PLATFORMS FOR HVAC EQUIPMENT
   - ABOVE AND BELOW CEILING CLOUDS PER NFPA CODE (SEE ARCHITECTURAL CEILING PLAN FOR LOCATIONS)
11. THE CONTRACTOR SHALL TEST THE ENTIRE SYSTEM(S) IN ACCORDANCE WITH NFPA-13, STATE AND LOCAL CODE REGULATIONS. CONTRACTOR SHALL MAKE ALL ARRANGEMENTS FOR A FINAL INSPECTION AND APPROVAL BY ALL REQUIRED GOVERNING AGENCIES. APPOINTMENTS MUST BE MADE IN ADVANCE FOR THESE INSPECTIONS. TEST REPORTS SHALL BE FURNISHED TO THE OWNER.
12. ALL SPRINKLER HEADS SHALL BE LOCATED IN ACCORDANCE WITH THE SPRINKLER DESIGN CRITERIA NOTES ON THIS DRAWING AND NFPA.
13. VERIFY ALL CEILING HEIGHTS PRIOR TO INSTALLATION OF SPRINKLER DROPS.
14. SPRINKLER HEAD LOCATIONS SHALL BE COORDINATED IN FIELD WITH ALL OTHER TRADES BEFORE INSTALLATION.
15. THE ABOVE CEILING CONSTRUCTION IS CONGESTED, THIS CONTRACTOR SHALL CAREFULLY REVIEW ALL DRAWINGS TO COORDINATE ALL NECESSARY PIPE RUNS. MULTIPLE OFFSETS IN PIPING WILL BE NECESSARY TO ACCOMMODATE PIPE RUNS THROUGH CEILINGS AND TO AVOID CONFLICTS WITH ALL OTHER TRADES.
16. NO PIPING SHALL BE RUN IN SPACES SUBJECT TO FREEZING. THIS CONTRACTOR MUST COORDINATE WITH THE G.C. AS TO LOCATION OF PIPE RUNS TO ENSURE ALL PIPING WILL BE PROTECTED AGAINST FREEZING.
17. THIS CONTRACTOR SHALL COORDINATE WITH G.C. AND MAKE G.C. AWARE OF ALL NECESSARY CUTTING AND PATCHING. G.C. WILL BE RESPONSIBLE FOR ALL CUTTING AND PATCHING.
18. THESE DRAWINGS INDICATE THE SIZE AND GENERAL LOCATION OF WORK. SCALED DIMENSIONS SHALL NOT BE USED. ANY DIMENSIONS NOT SHOWN SHALL BE OBTAINED FROM THE ARCHITECTURAL DRAWINGS. FOR EXACT LOCATIONS, HEIGHT, DOOR SWINGS, MOUNTING HEIGHTS, ETC. REFER TO ARCHITECTURAL DRAWING AND DETAILS.
19. PRIOR TO STARTING ANY WORK, PURCHASE OF EQUIPMENT, ETC. COORDINATE THE WORK WITH OTHER TRADES. CONFER WITH OTHER CONTRACTORS WHOSE WORK MIGHT AFFECT THIS INSTALLATION AND ARRANGE ALL PARTS OF THIS WORK AND EQUIPMENT OF OTHERS, WITH THE BUILDING CONSTRUCTION AND WITH ARCHITECTURAL FINISH SO THAT IT WILL HARMONIZE IN SERVICE AND APPEARANCE. IN THE EVENT THERE IS A CONFLICT IN COORDINATION BETWEEN TRADES, THE OWNER WILL RESOLVE IT.
20. BIDDERS, BEFORE SUBMITTING A PROPOSAL, SHALL VISIT AND EXAMINE CAREFULLY THE AREAS AFFECTED BY THIS WORK TO BECOME FAMILIAR WITH EXISTING CONDITIONS AND WITH THE DIFFICULTIES THAT WILL EFFECT THE EXECUTION OF THIS WORK. SUBMISSION OF A PROPOSAL WILL BE CONSTRUED AS EVIDENCE THAT SUCH AN EXAMINATION HAS BEEN MADE AND LATER CLAIMS WILL NOT BE RECOGNIZED FOR EXTRA LABOR, EQUIPMENT OR MATERIALS REQUIRED BECAUSE OF DIFFICULTIES ENCOUNTERED WHICH COULD HAVE BEEN FORESEEN HAD SUCH EXAMINATION BEEN MADE.
21. SUBMIT SHOP DRAWINGS AND HYDRAULIC CALCULATIONS TO THE ENGINEER FOR REVIEW AND COMMENTS BEFORE FABRICATION OF THE WORK IS STARTED.
22. ALL PARTS OF THE WORK AND ASSOCIATED EQUIPMENT SHALL BE TESTED AND ADJUSTED TO WORK PROPERLY AND BE LEFT IN PERFECT OPERATING CONDITION.
23. PROVIDE ALL LABOR AND MATERIALS NEEDED FOR A COMPLETE AND PROPERLY OPERATIONAL SYSTEM. THE SPRINKLER SYSTEM SHALL BE HYDRAULICALLY CALCULATED, DESIGNED AND INSTALLED BY THIS CONTRACTOR. THE CONTRACTOR SHALL SUBMIT CALCULATIONS AND SHOP DRAWINGS TO ALL AGENCIES HAVING JURISDICTION. NO WORK SHALL COMMENCE ON THE SYSTEM UNTIL THESE DOCUMENTS ARE FULLY APPROVED. SHOP DRAWINGS SHALL BEAR THE SEAL OF A PROFESSIONAL ENGINEER REGISTERED IN PENNSYLVANIA.
24. THE DRAWINGS ARE GENERALLY DIAGRAMMATIC AND INDICATIVE OF WORK TO BE PERFORMED; THE DRAWINGS ARE NOT INTENDED TO SHOW EXACT LOCATIONS OR TO SHOW EVERY PIPE, SPRINKLER HEADS, FITTING, VALVE OR APPURTENANCE REQUIRED FOR A COMPLETE INSTALLATION. IT IS THE INTENT OF THESE DOCUMENTS TO PROVIDE A COMPLETELY SPRINKLED BUILDING IN ACCORDANCE WITH NFPA AND THE LOCAL JURISDICTION HAVING AUTHORITY. DO NOT SCALE LOCATION, DIMENSIONS, OR QUANTITY OF SPRINKLER HEADS FROM THESE DRAWINGS. NO ADDITIONAL COMPENSATION WILL BE ALLOWED FOR INCREASED QUANTITIES.
25. THE CONTRACTOR IS RESPONSIBLE FOR CHECKING AND VERIFYING ALL EXISTING CONDITIONS AND DIMENSIONS AND FOR COORDINATION OF HIS WORK WITH THAT OF OTHER TRADES. PERFORM WORK IN AN ORDERLY MANNER AND WITH THE LEAST POSSIBLE INTERFERENCE.
26. SPRINKLER HEADS ARE TO BE LOCATED IN THE CENTER OF CEILING TILES, UNLESS SHOWN OTHERWISE. SPRINKLER HEADS LOCATED IN 2'-0"x2'-0" CEILING SHALL BE LOCATED IN THE CENTER OF THE 2'-0"x2'-0" AREA OF THE TILE.
27. CONTRACTOR SHALL INSTALL ALL SPRINKLER PIPE AND FITTINGS SO THE SYSTEM CAN BE DRAINED.
28. WORK SHALL CONFORM TO OR MEET THE REQUIREMENTS OF THE MOST CURRENT PENNSYLVANIA EDITION OF:
   A. STANDARD FOR THE INSTALLATION OF SPRINKLER SYSTEMS; 2019 NFPA 13
   B. STANDARD FOR THE INSTALLATION OF STANDPIPE AND HOSE SYSTEM; 2019 NFPA 14
   C. STANDARD FOR THE INSTALLATION OF STATIONARY PUMPS FOR FIRE PROTECTION; 2019 NFPA 20
   D. INTERNATIONAL BUILDING CODE; 2021 IBC
   E. NATIONAL ELECTRIC CODE (NFPA 70); 2020 NEC
   F. NATIONAL FIRE ALARM AND SIGNALING CODE; 2019 NFPA 72
   G. ALL FEDERAL, STATE AND LOCAL CODES AND ORDINANCES

TEST AND INSPECTION:

1. THE CONTRACTOR SHALL TEST THE ENTIRE SYSTEM IN ACCORDANCE WITH NFPA STANDARDS AND REGULATIONS. CONTRACTOR SHALL COORDINATE ALL ARRANGEMENTS FOR A FINAL INSPECTION & APPROVAL BY THE AUTHORITY HAVING JURISDICTION. APPOINTMENTS MUST BE MADE IN ADVANCE FOR THESE INSPECTIONS. TEST REPORTS SHALL BE FURNISHED TO THE OWNER.
2. PROVIDE INSTRUMENTS, EQUIPMENT: PAY EXPENSES INCURRED IN MAKING TESTS, OBTAIN APPROVALS & CERTIFICATES.
3. THIS CONTRACTOR SHALL BE HELD RESPONSIBLE FOR ANY DAMAGE CAUSED TO HIS OWN OR OTHER CONTRACTORS' WORK AS A RESULT OF TESTS AND WILL BE CALLED UPON TO PAY FOR ALL REPAIRS WITHOUT ADDITIONAL COST TO OWNER.

Client:
16-22 Union Street - Apartment Building
Client: Empire Property Construction
16-22 Union St.
Wilkes-Barre, Pa 18701

Consultants:
DMG
design management group
consulting engineers
570 299 7520
dmgeng.com

CAM architect
CAM architect, LLC
ARCHITECTS | PLANNERS
606 North Main St. Wilkes-Barre, PA 18705
T | 570| 824.3320
F | 570| 606.4966
www.camarchus.com
© 2026 CAM ARCHITECT

Seals:
PRELIMINARY - NOT FOR CONSTRUCTION
THIS COMPUTER ELECTRONIC FILE/DRAWING IS FOR INFORMATIONAL PURPOSES ONLY AND IS NOT INTENDED FOR CONSTRUCTION OR BIDDING. DO NOT SCALE FROM THIS DOCUMENT. USE ONLY SEALED, OFFICIAL CONSTRUCTION DOCUMENTS FROM THE ARCHITECT.

Revisions | Issues
No: Date:

Phase:
PERMIT/PRICING

Project: Apartment Building
Date: 06/15/2026
Drawn: NW Checked: KJS
Scale: AS NOTED
Sheet:

FIRE PROTECTION COVER SHEET

FP-1

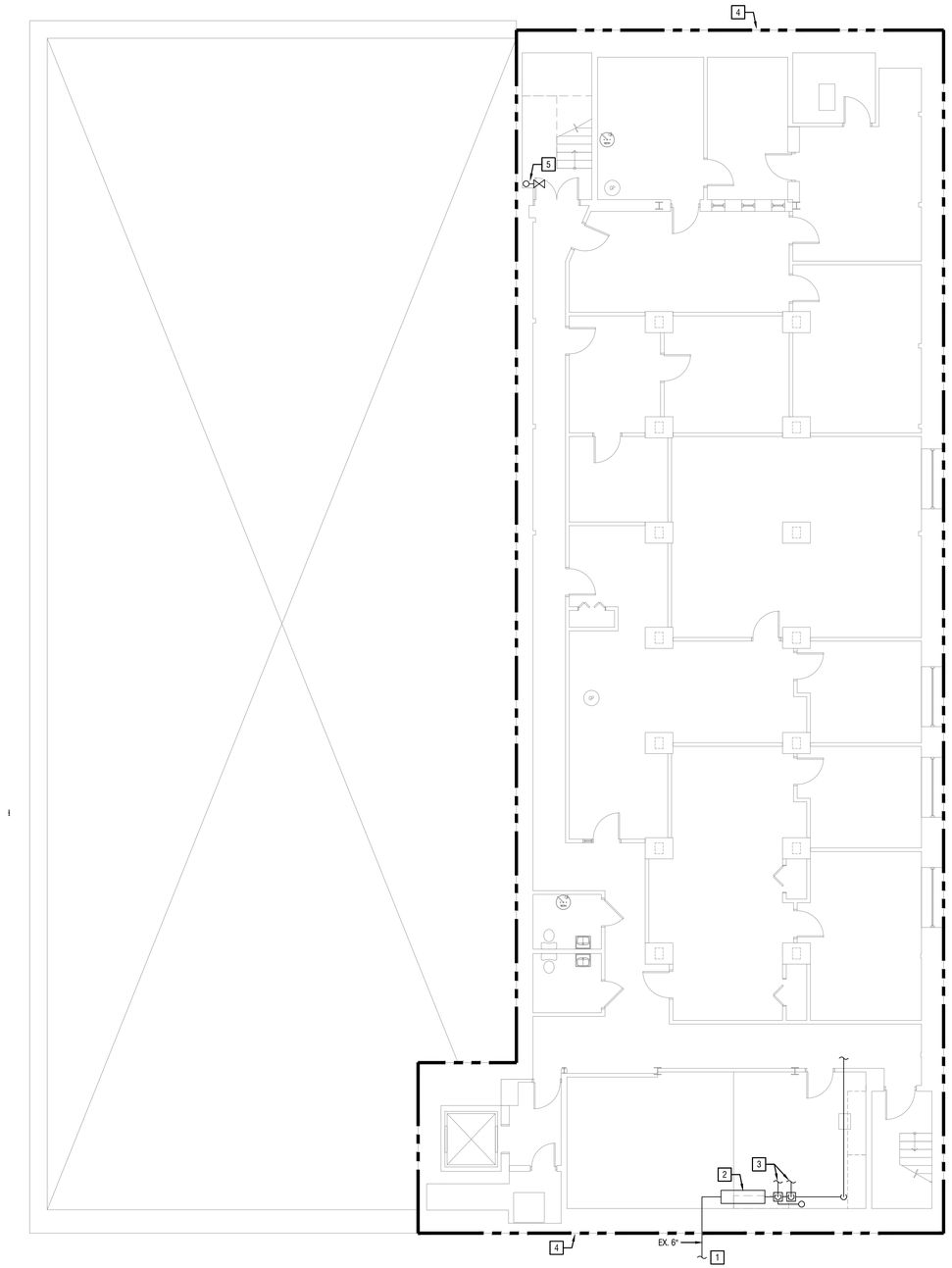

1 FP-2 FIRE PROTECTION DEMOLITION PLAN - BASEMENT

SCALE: 1/8" = 1'-0"

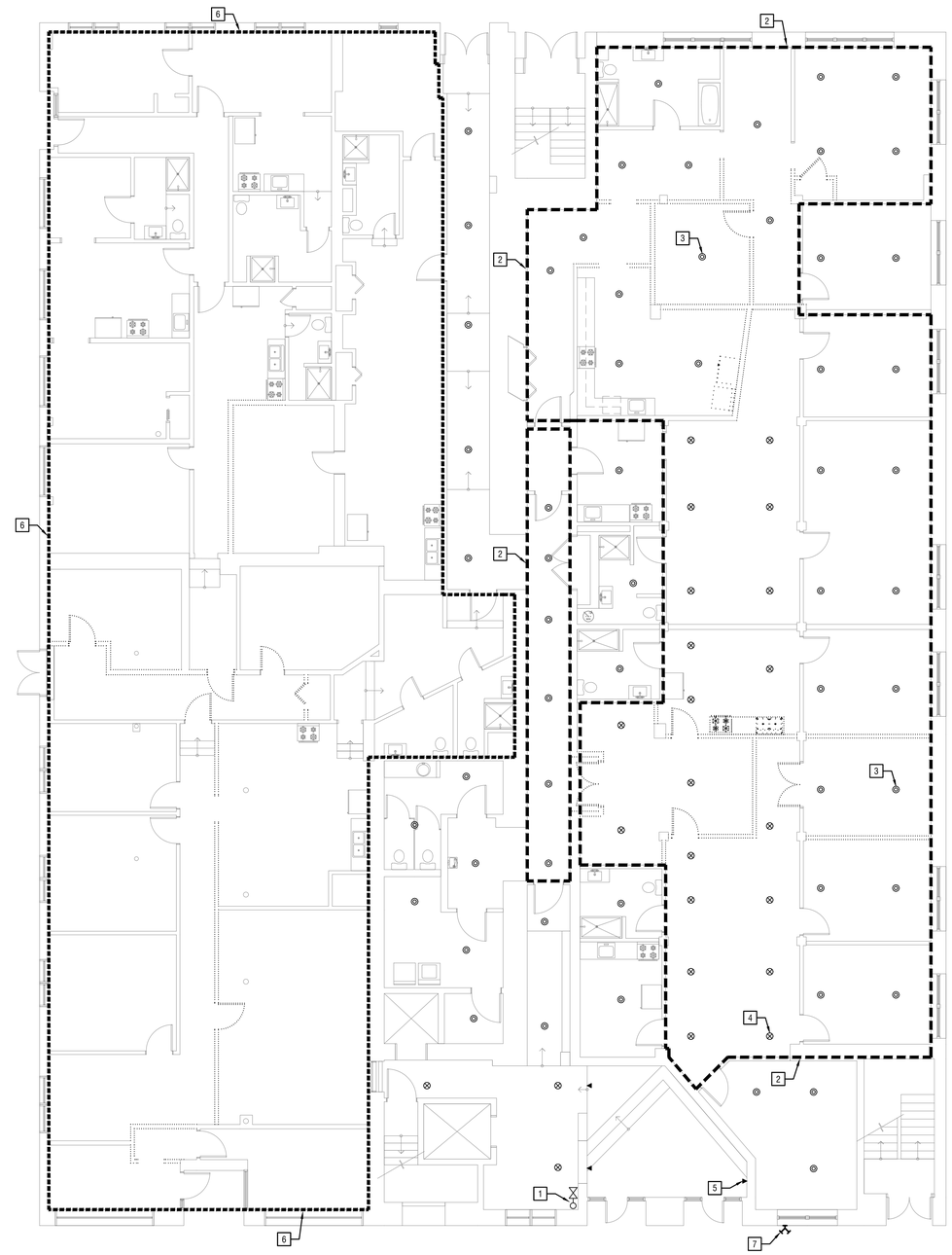

2 FP-2 FIRE PROTECTION DEMOLITION PLAN - FIRST FLOOR

SCALE: 1/8" = 1'-0"

KEYED CONSTRUCTION NOTES

1. APPROXIMATE LOCATION OF EXISTING FIRE SERVICE ENTRANCE FROM STREET.
2. APPROXIMATE LOCATION OF EXISTING FIRE PROTECTION BACKFLOW PREVENTER LOW NEAR BASEMENT FLOOR LEVEL. BACKFLOW PREVENTER TO BE TESTED TO ENSURE PROPER OPERATION PRIOR TO CONSTRUCTION. VERIFY TAMPER SWITCHES ARE PRESENT ON SHUTOFF VALVES AND WIRED TO FIRE ALARM SYSTEM.
3. APPROXIMATE LOCATION OF EXISTING WET PIPE FIRE ALARM VALVE RISERS TO REMAIN. VERIFY TAMPER SWITCHES ARE PRESENT ON SHUTOFF VALVES, A FLOW SWITCH IS PRESENT DOWNSTREAM OF CHECK VALVE, AND THAT BOTH SWITCHES ARE WIRED TO FIRE ALARM SYSTEM.
4. EXISTING SPRINKLER COVERAGE AT BASEMENT CEILING HEIGHT TO REMAIN. FIELD VERIFY EXISTING SPRINKLER TYPES, LOCATIONS, CONDITIONS, ETC. PRIOR TO CONSTRUCTION. PROVIDE ADDITIONAL SPRINKLER COVERAGE IF EXISTING SPRINKLER COVERAGE IS NOT PRESENT OR NOT INSTALLED IN ACCORDANCE WITH NFPA-13 REQUIREMENTS.
5. EXISTING STANDPIPE AND HOSE CONNECTION WITHIN STAIRWELL TO REMAIN. CONTRACTOR SHALL FIELD VERIFY ALL EXISTING STANDPIPE AND HOSE CONNECTION LOCATIONS TO ENSURE NFPA-14 REQUIREMENTS ARE MET.

GENERAL CONSTRUCTION NOTES

1. AREAS INDICATED AS DEMOLITION SHALL HAVE ALL WET BRANCH PIPING AND ALL RELATED FIRE PROTECTION EQUIPMENT, PIPING, VALVES, ETC. TO BE REMOVED, UNLESS OTHERWISE NOTED.
2. THE INTENT OF THE DEMOLITION DRAWINGS IS TO GIVE THE CONTRACTOR AN OVERALL SCOPE OF WORK REQUIRED TO COMPLETE THIS PROJECT.
3. IT ALSO THE INTENT OF THE DRAWINGS TO PROVIDE A COMPLETE CLEAN SPACE IN THE AREAS DESIGNATED PRIOR TO CONSTRUCTION.
4. ALL PIPING AND SPRINKLERS SHOWN ARE EXISTING AND INDICATES APPROXIMATE LOCATIONS AND DIRECTIONS. IT SHALL BE THIS CONTRACTORS RESPONSIBILITY TO FIELD VERIFY EXACT SPRINKLER HEAD AND PIPING LOCATIONS / SIZES DURING DEMOLITION / CONSTRUCTION PHASES OF THIS PROJECT.
5. ALL EXISTING FIRE PROTECTION, DOMESTIC WATER, SANITARY/VENT, GAS, ETC. PIPING OUTSIDE OF WORK AREA SHALL REMAIN AND REMAIN IN SERVICE.
6. THE CONTRACTOR IS CAUTIONED THAT WHEN PERFORMING DEMOLITION WORK, FIRE PROTECTION AND PLUMBING PIPING SERVING AREAS OF THE BUILDING OUTSIDE THE WORK AREA MUST REMAIN IN OPERATION.
7. THE OWNER RESERVES THE RIGHT TO CLAIM ANY MATERIALS REMOVED DURING DEMOLITION THAT WILL NOT BE REUSED. THE CONTRACTOR IS RESPONSIBLE TO REMOVE FROM SITE ANY MATERIALS NOT CLAIMED BY THE OWNER.
8. ALL EXISTING SPRINKLERS AND PIPING SHOWN ARE BASED ON FIELD OBSERVATION WHERE POSSIBLE. CONTRACTOR SHALL FIELD VERIFY ALL EXISTING SPRINKLER AND PIPING LOCATIONS IN RELATION TO RENOVATED AREAS AS REQUIRED.
9. CONTRACTOR TO COORDINATE ANY REMOVAL OR REPLACEMENT OF EXISTING CEILINGS WITH OWNER/ARHCITECT PRIOR TO CONSTRUCTION. IF EXISTING CEILINGS ARE TO BE REMOVED OR REPLACED, THE EXISTING CEILING LEVEL SPRINKLERS SHALL BE REMOVED AS WELL. CUT AND CAP BRANCH PIPING AS CLOSE TO MAIN AS POSSIBLE AND PREPARE PIPING FOR NEW SPRINKLER CONNECTION.

KEYED CONSTRUCTION NOTES

1. EXISTING STANDPIPE AND HOSE CONNECTION WITHIN STAIRWELL TO REMAIN. CONTRACTOR SHALL FIELD VERIFY ALL EXISTING STANDPIPE AND HOSE CONNECTION LOCATIONS TO ENSURE NFPA-14 REQUIREMENTS ARE MET.
2. APPROXIMATE OUTLINE OF AREA IN WHICH EXISTING SPRINKLER COVERAGE AT CEILING LEVEL IS TO BE REMOVED TO MAKE A CLEAN SPACE FOR NEW RENOVATION AREA. CONTRACTOR TO COORDINATE EXTENTS OF RENOVATION AREA, ANY CEILING REMOVAL, AND EXISTING SPRINKLER LOCATIONS PRIOR TO CONSTRUCTION.
3. APPROXIMATE LOCATION OF EXISTING SEMI RECESSED PENDENT SPRINKLER AT CEILING LEVEL (TYPICAL).
4. APPROXIMATE LOCATION OF EXISTING UPRIGHT SPRINKLER AT CEILING LEVEL (TYPICAL).
5. APPROXIMATE LOCATION OF EXISTING SIDEWALL SPRINKLER AT CEILING LEVEL (TYPICAL).
6. APPROXIMATE OUTLINE OF EXISTING AREA NOT PROVIDED WITH EXISTING SPRINKLER COVERAGE AT CEILING LEVEL. SPRINKLER COVERAGE TO BE PROVIDED WITHIN NEW RENOVATION PROJECT SERVED FROM EXISTING WET PIPE SPRINKLER SYSTEM.
7. APPROXIMATE LOCATION OF EXISTING FIRE DEPARTMENT CONNECTION ON EXISTING EXTERIOR WALL REMAIN.

GENERAL CONSTRUCTION NOTES

1. AREAS INDICATED AS DEMOLITION SHALL HAVE ALL WET BRANCH PIPING AND ALL RELATED FIRE PROTECTION EQUIPMENT, PIPING, VALVES, ETC. TO BE REMOVED, UNLESS OTHERWISE NOTED.
2. THE INTENT OF THE DEMOLITION DRAWINGS IS TO GIVE THE CONTRACTOR AN OVERALL SCOPE OF WORK REQUIRED TO COMPLETE THIS PROJECT.
3. IT ALSO THE INTENT OF THE DRAWINGS TO PROVIDE A COMPLETE CLEAN SPACE IN THE AREAS DESIGNATED PRIOR TO CONSTRUCTION.
4. ALL PIPING AND SPRINKLERS SHOWN ARE EXISTING AND INDICATES APPROXIMATE LOCATIONS AND DIRECTIONS. IT SHALL BE THIS CONTRACTORS RESPONSIBILITY TO FIELD VERIFY EXACT SPRINKLER HEAD AND PIPING LOCATIONS / SIZES DURING DEMOLITION / CONSTRUCTION PHASES OF THIS PROJECT.
5. ALL EXISTING FIRE PROTECTION, DOMESTIC WATER, SANITARY/VENT, GAS, ETC. PIPING OUTSIDE OF WORK AREA SHALL REMAIN AND REMAIN IN SERVICE.
6. THE CONTRACTOR IS CAUTIONED THAT WHEN PERFORMING DEMOLITION WORK, FIRE PROTECTION AND PLUMBING PIPING SERVING AREAS OF THE BUILDING OUTSIDE THE WORK AREA MUST REMAIN IN OPERATION.
7. THE OWNER RESERVES THE RIGHT TO CLAIM ANY MATERIALS REMOVED DURING DEMOLITION THAT WILL NOT BE REUSED. THE CONTRACTOR IS RESPONSIBLE TO REMOVE FROM SITE ANY MATERIALS NOT CLAIMED BY THE OWNER.
8. ALL EXISTING SPRINKLERS AND PIPING SHOWN ARE BASED ON FIELD OBSERVATION WHERE POSSIBLE. CONTRACTOR SHALL FIELD VERIFY ALL EXISTING SPRINKLER AND PIPING LOCATIONS IN RELATION TO RENOVATED AREAS AS REQUIRED.
9. CONTRACTOR TO COORDINATE ANY REMOVAL OR REPLACEMENT OF EXISTING CEILINGS WITH OWNER/ARHCITECT PRIOR TO CONSTRUCTION. IF EXISTING CEILINGS ARE TO BE REMOVED OR REPLACED, THE EXISTING CEILING LEVEL SPRINKLERS SHALL BE REMOVED AS WELL. CUT AND CAP BRANCH PIPING AS CLOSE TO MAIN AS POSSIBLE AND PREPARE PIPING FOR NEW SPRINKLER CONNECTION.

Client:

16-22 Union Street - Apartment Building

Client: Empire Property Construction
16-22 Union St.
Wilkes-Barre, Pa 18701

Consultants:

DMG
design management group
consulting engineers
570 299 7520
dmgeng.com

CAM architect
CAM architect, LLC
ARCHITECTS | PLANNERS
606 North Main St. Wilkes-Barre, PA 18705
T | 570| 824.3320
F | 570| 606.4966
www.camarchus.com

© 2026 CAM ARCHITECT

Seals:

PRELIMINARY - NOT FOR CONSTRUCTION
THIS DOCUMENT IS INTENDED TO BE FOR INFORMATIONAL PURPOSES ONLY AND IS NOT INTENDED FOR CONSTRUCTION OR BIDDING. DO NOT SCALE DRAWINGS. DIMENSIONS SHALL BE VERIFIED IN FIELD BY A LICENSED ARCHITECT. DO NOT START CONSTRUCTION WITHOUT A LICENSED ARCHITECT OF CONSTRUCTION DOCUMENTS FROM CAM.

Revisions | Issues

No:	Date:

Phase:
PERMIT/PRICING

Project: Apartment Building
Date: 06/15/2026
Drawn: NW Checked: KJS
Scale: AS NOTED
Sheet:

FIRE PROTECTION FLOOR PLANS - DEMOLITION

FP-2

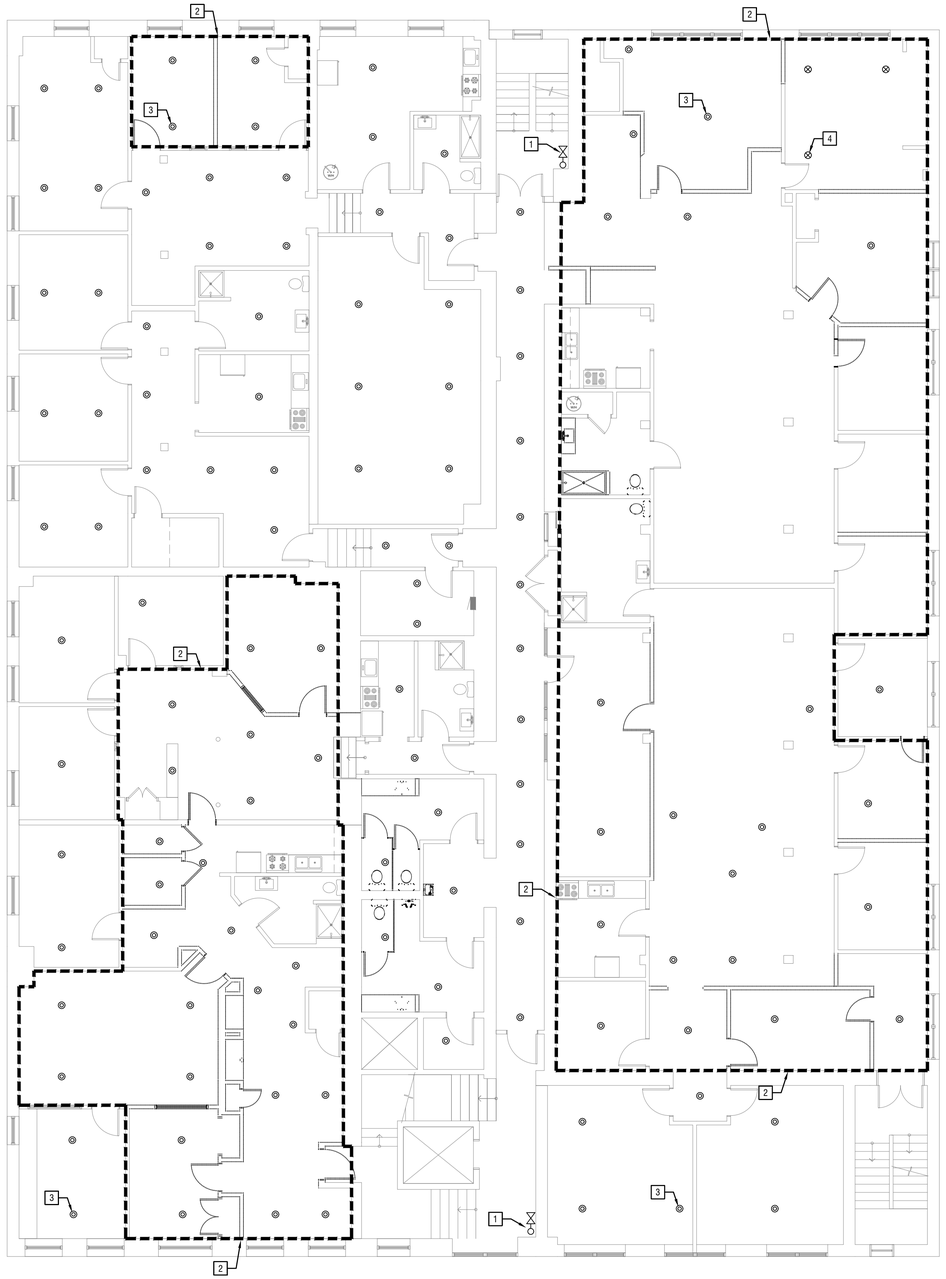

1 FP-3 FIRE PROTECTION DEMOLITION PLAN - SECOND FLOOR

SCALE: 1/8" = 1'-0"

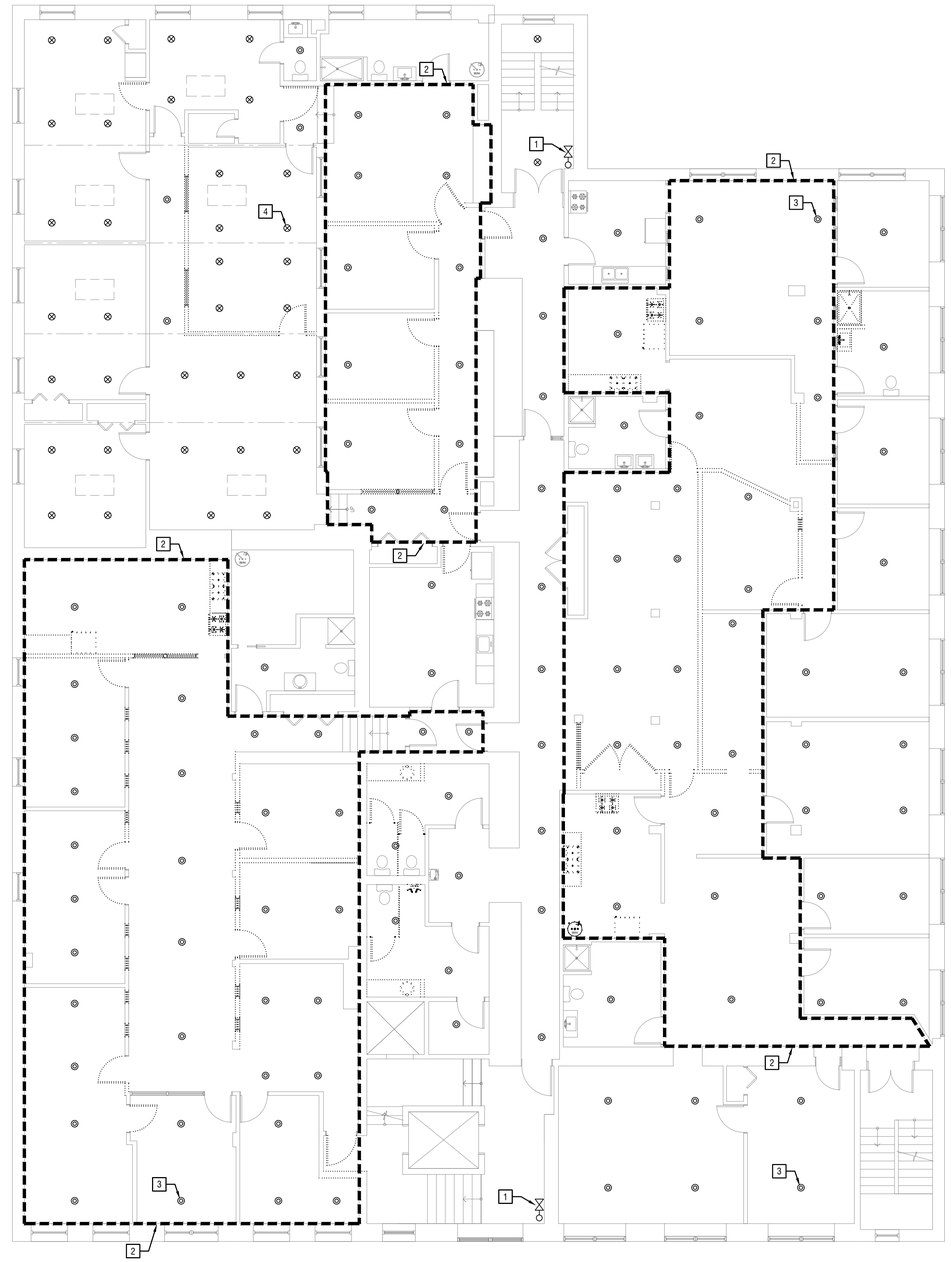

2 FP-3 FIRE PROTECTION DEMOLITION PLAN - THIRD FLOOR

SCALE: 1/8" = 1'-0"

KEYED CONSTRUCTION NOTES

1. EXISTING STANDPIPE AND HOSE CONNECTION WITHIN STAIRWELL TO REMAIN. CONTRACTOR SHALL FIELD VERIFY ALL EXISTING STANDPIPE AND HOSE CONNECTION LOCATIONS TO ENSURE NFPA-14 REQUIREMENTS ARE MET.
2. APPROXIMATE OUTLINE OF AREA IN WHICH EXISTING SPRINKLER COVERAGE AT CEILING LEVEL IS TO BE REMOVED TO MAKE A CLEAN SPACE FOR NEW RENOVATION AREA. CONTRACTOR TO COORDINATE EXTENTS OF RENOVATION AREA, ANY CEILING REMOVAL, AND EXISTING SPRINKLER LOCATIONS PRIOR TO CONSTRUCTION.
3. APPROXIMATE LOCATION OF EXISTING SEMI RECESSED PENDENT SPRINKLER AT CEILING LEVEL (TYPICAL).
4. APPROXIMATE LOCATION OF EXISTING UPRIGHT SPRINKLER AT CEILING LEVEL (TYPICAL).

GENERAL CONSTRUCTION NOTES

1. AREAS INDICATED AS DEMOLITION SHALL HAVE ALL WET BRANCH PIPING AND ALL RELATED FIRE PROTECTION EQUIPMENT, PIPING, VALVES, ETC. TO BE REMOVED, UNLESS OTHERWISE NOTED.
2. THE INTENT OF THE DEMOLITION DRAWINGS IS TO GIVE THE CONTRACTOR AN OVERALL SCOPE OF WORK REQUIRED TO COMPLETE THIS PROJECT.
3. IT ALSO THE INTENT OF THE DRAWINGS TO PROVIDE A COMPLETE CLEAN SPACE IN THE AREAS DESIGNATED PRIOR TO CONSTRUCTION.
4. ALL PIPING AND SPRINKLERS SHOWN ARE EXISTING AND INDICATES APPROXIMATE LOCATIONS AND DIRECTIONS. IT SHALL BE THIS CONTRACTORS RESPONSIBILITY TO FIELD VERIFY EXACT SPRINKLER HEAD AND PIPING LOCATIONS / SIZES DURING DEMOLITION / CONSTRUCTION PHASES OF THIS PROJECT.
5. ALL EXISTING FIRE PROTECTION, DOMESTIC WATER, SANITARY/VENT, GAS, ETC. PIPING OUTSIDE OF WORK AREA SHALL REMAIN AND REMAIN IN SERVICE.
6. THE CONTRACTOR IS CAUTIONED THAT WHEN PERFORMING DEMOLITION WORK, FIRE PROTECTION AND PLUMBING PIPING SERVING AREAS OF THE BUILDING OUTSIDE THE WORK AREA MUST REMAIN IN OPERATION.
7. THE OWNER RESERVES THE RIGHT TO CLAIM ANY MATERIALS REMOVED DURING DEMOLITION THAT WILL NOT BE REUSED. THE CONTRACTOR IS RESPONSIBLE TO REMOVE FROM SITE ANY MATERIALS NOT CLAIMED BY THE OWNER.
8. ALL EXISTING SPRINKLERS AND PIPING SHOWN ARE BASED ON FIELD OBSERVATION WHERE POSSIBLE. CONTRACTOR SHALL FIELD VERIFY ALL EXISTING SPRINKLER AND PIPING LOCATIONS IN RELATION TO RENOVATED AREAS AS REQUIRED.
9. CONTRACTOR TO COORDINATE ANY REMOVAL OR REPLACEMENT OF EXISTING CEILINGS WITH OWNER/ARHCITECT PRIOR TO CONSTRUCTION. IF EXISTING CEILINGS ARE TO BE REMOVED OR REPLACED, THE EXISTING CEILING LEVEL SPRINKLERS SHALL BE REMOVED AS WELL. CUT AND CAP BRANCH PIPING AS CLOSE TO MAIN AS POSSIBLE AND PREPARE PIPING FOR NEW SPRINKLER CONNECTION.

KEYED CONSTRUCTION NOTES

1. EXISTING STANDPIPE AND HOSE CONNECTION WITHIN STAIRWELL TO REMAIN. CONTRACTOR SHALL FIELD VERIFY ALL EXISTING STANDPIPE AND HOSE CONNECTION LOCATIONS TO ENSURE NFPA-14 REQUIREMENTS ARE MET.
2. APPROXIMATE OUTLINE OF AREA IN WHICH EXISTING SPRINKLER COVERAGE AT CEILING LEVEL IS TO BE REMOVED TO MAKE A CLEAN SPACE FOR NEW RENOVATION AREA. CONTRACTOR TO COORDINATE EXTENTS OF RENOVATION AREA, ANY CEILING REMOVAL, AND EXISTING SPRINKLER LOCATIONS PRIOR TO CONSTRUCTION.
3. APPROXIMATE LOCATION OF EXISTING SEMI RECESSED PENDENT SPRINKLER AT CEILING LEVEL (TYPICAL).
4. APPROXIMATE LOCATION OF EXISTING UPRIGHT SPRINKLER AT CEILING LEVEL (TYPICAL).

GENERAL CONSTRUCTION NOTES

1. AREAS INDICATED AS DEMOLITION SHALL HAVE ALL WET BRANCH PIPING AND ALL RELATED FIRE PROTECTION EQUIPMENT, PIPING, VALVES, ETC. TO BE REMOVED, UNLESS OTHERWISE NOTED.
2. THE INTENT OF THE DEMOLITION DRAWINGS IS TO GIVE THE CONTRACTOR AN OVERALL SCOPE OF WORK REQUIRED TO COMPLETE THIS PROJECT.
3. IT ALSO THE INTENT OF THE DRAWINGS TO PROVIDE A COMPLETE CLEAN SPACE IN THE AREAS DESIGNATED PRIOR TO CONSTRUCTION.
4. ALL PIPING AND SPRINKLERS SHOWN ARE EXISTING AND INDICATES APPROXIMATE LOCATIONS AND DIRECTIONS. IT SHALL BE THIS CONTRACTORS RESPONSIBILITY TO FIELD VERIFY EXACT SPRINKLER HEAD AND PIPING LOCATIONS / SIZES DURING DEMOLITION / CONSTRUCTION PHASES OF THIS PROJECT.
5. ALL EXISTING FIRE PROTECTION, DOMESTIC WATER, SANITARY/VENT, GAS, ETC. PIPING OUTSIDE OF WORK AREA SHALL REMAIN AND REMAIN IN SERVICE.
6. THE CONTRACTOR IS CAUTIONED THAT WHEN PERFORMING DEMOLITION WORK, FIRE PROTECTION AND PLUMBING PIPING SERVING AREAS OF THE BUILDING OUTSIDE THE WORK AREA MUST REMAIN IN OPERATION.
7. THE OWNER RESERVES THE RIGHT TO CLAIM ANY MATERIALS REMOVED DURING DEMOLITION THAT WILL NOT BE REUSED. THE CONTRACTOR IS RESPONSIBLE TO REMOVE FROM SITE ANY MATERIALS NOT CLAIMED BY THE OWNER.
8. ALL EXISTING SPRINKLERS AND PIPING SHOWN ARE BASED ON FIELD OBSERVATION WHERE POSSIBLE. CONTRACTOR SHALL FIELD VERIFY ALL EXISTING SPRINKLER AND PIPING LOCATIONS IN RELATION TO RENOVATED AREAS AS REQUIRED.
9. CONTRACTOR TO COORDINATE ANY REMOVAL OR REPLACEMENT OF EXISTING CEILINGS WITH OWNER/ARHCITECT PRIOR TO CONSTRUCTION. IF EXISTING CEILINGS ARE TO BE REMOVED OR REPLACED, THE EXISTING CEILING LEVEL SPRINKLERS SHALL BE REMOVED AS WELL. CUT AND CAP BRANCH PIPING AS CLOSE TO MAIN AS POSSIBLE AND PREPARE PIPING FOR NEW SPRINKLER CONNECTION.

Client:

16-22 Union Street - Apartment Building

Client: Empire Property Construction
16-22 Union St.
Wilkes-Barre, Pa 18701

Consultants:

DMG
design management group
consulting engineers
570 299 7520
dmgeng.com

CAM architect
architect

CAM architect, LLC
ARCHITECTS | PLANNERS
606 North Main St. Wilkes-Barre, PA 18705
T | 570| 824.3320
F | 570| 606.4966
www.camarchus.com

© 2026 CAM ARCHITECT

Seals:

PRELIMINARY - NOT FOR CONSTRUCTION
THIS COMPUTER FILE/DRAWING IS FOR INFORMATIONAL PURPOSES ONLY AND IS NOT INTENDED FOR CONSTRUCTION OR BIDDING. DO NOT SCALE FROM DRAWING. SEALED SET OF CONSTRUCTION DRAWINGS MAY BE OBTAINED FROM THE ARCHITECT.

Revisions | Issues

No:	Date:

Phase:
PERMIT/PRICING

Project: Apartment Building
Date: 06/15/2026
Drawn: NW Checked: KJS
Scale: AS NOTED
Sheet:

FIRE PROTECTION FLOOR PLANS - DEMOLITION

FP-3

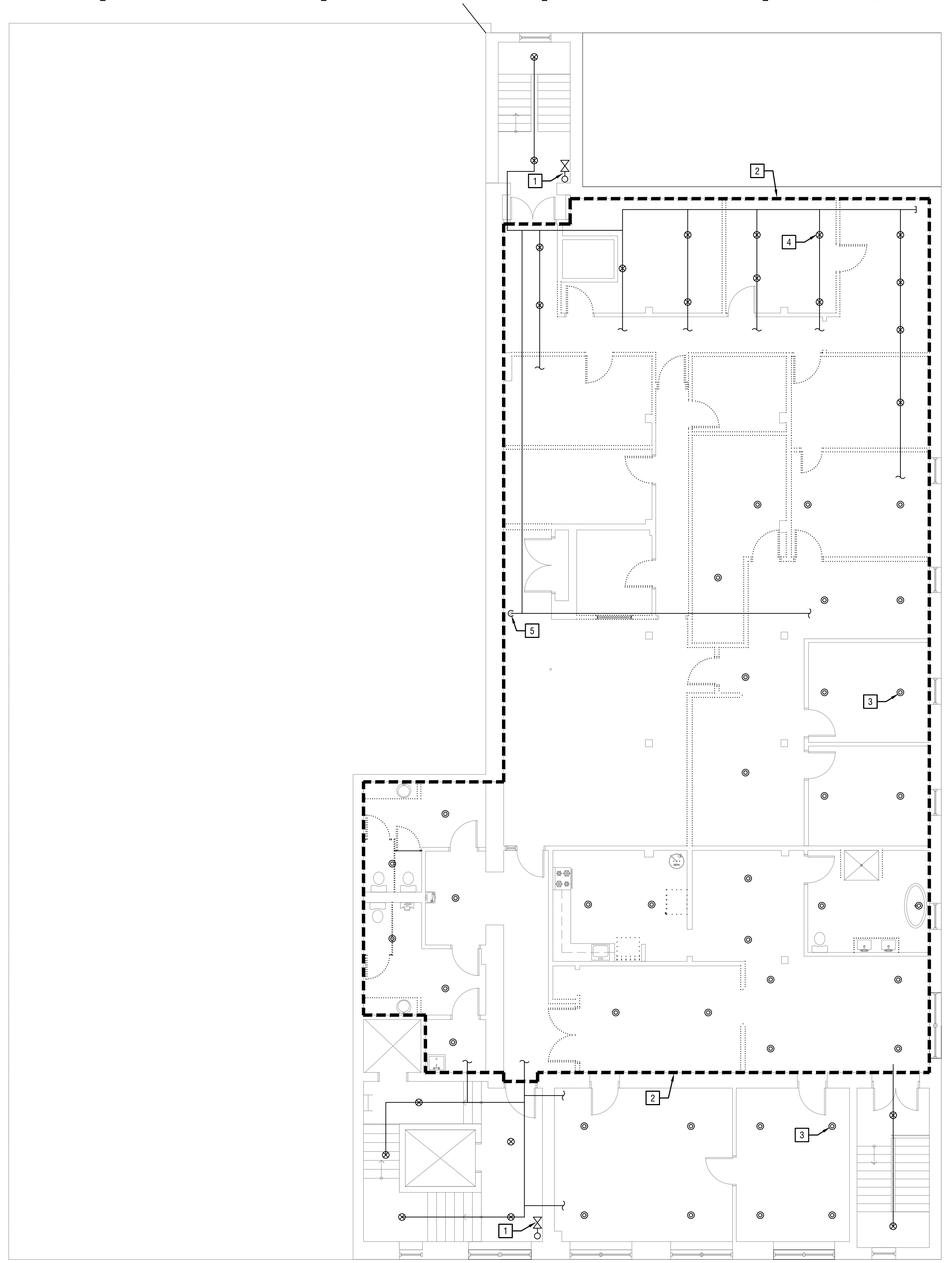

1 / FP-4 FIRE PROTECTION DEMOLITION PLAN - FOURTH FLOOR

SCALE: 1/8" = 1'-0"

KEYED CONSTRUCTION NOTES

1. EXISTING STANDPIPE AND HOSE CONNECTION WITHIN STAIRWELL TO REMAIN. CONTRACTOR SHALL FIELD VERIFY ALL EXISTING STANDPIPE AND HOSE CONNECTION LOCATIONS TO ENSURE NFPA-14 REQUIREMENTS ARE MET.
2. APPROXIMATE OUTLINE OF AREA IN WHICH EXISTING SPRINKLER COVERAGE AT CEILING LEVEL IS TO BE REMOVED TO MAKE A CLEAN SPACE FOR NEW RENOVATION AREA. CONTRACTOR TO COORDINATE EXTENTS OF RENOVATION AREA, ANY CEILING REMOVAL, AND EXISTING SPRINKLER LOCATIONS PRIOR TO CONSTRUCTION.
3. APPROXIMATE LOCATION OF EXISTING SEMI RECESSED PENDENT SPRINKLER AT CEILING LEVEL (TYPICAL).
4. APPROXIMATE LOCATION OF EXISTING UPRIGHT SPRINKLER AT CEILING LEVEL (TYPICAL).
5. APPROXIMATE LOCATION OF SPRINKLER RISE UP FROM FLOOR BELOW. FIELD VERIFY EXISTING SIZE AND LOCATION. VERIFY EXISTING LOCATION IN RELATION TO MINIMUM EGRESS HALLWAY WIDTH REQUIREMENTS. IF SPRINKLER RISE OBSTRUCTS HALLWAY WIDTH REQUIREMENTS, SPRINKLER RISE TO BE RELOCATED AND RECONNECTED TO EXISTING ABOVE CEILING PIPING.

GENERAL CONSTRUCTION NOTES

1. AREAS INDICATED AS DEMOLITION SHALL HAVE ALL WET BRANCH PIPING AND ALL RELATED FIRE PROTECTION EQUIPMENT, PIPING, VALVES, ETC. TO BE REMOVED, UNLESS OTHERWISE NOTED.
2. THE INTENT OF THE DEMOLITION DRAWINGS IS TO GIVE THE CONTRACTOR AN OVERALL SCOPE OF WORK REQUIRED TO COMPLETE THIS PROJECT.
3. IT ALSO THE INTENT OF THE DRAWINGS TO PROVIDE A COMPLETE CLEAN SPACE IN THE AREAS DESIGNATED PRIOR TO CONSTRUCTION.
4. ALL PIPING AND SPRINKLERS SHOWN ARE EXISTING AND INDICATES APPROXIMATE LOCATIONS AND DIRECTIONS. IT SHALL BE THIS CONTRACTORS RESPONSIBILITY TO FIELD VERIFY EXACT SPRINKLER HEAD AND PIPING LOCATIONS / SIZES DURING DEMOLITION / CONSTRUCTION PHASES OF THIS PROJECT.
5. ALL EXISTING FIRE PROTECTION, DOMESTIC WATER, SANITARY/VENT, GAS, ETC. PIPING OUTSIDE OF WORK AREA SHALL REMAIN AND REMAIN IN SERVICE.
6. THE CONTRACTOR IS CAUTIONED THAT WHEN PERFORMING DEMOLITION WORK, FIRE PROTECTION AND PLUMBING PIPING SERVING AREAS OF THE BUILDING OUTSIDE THE WORK AREA MUST REMAIN IN OPERATION.
7. THE OWNER RESERVES THE RIGHT TO CLAIM ANY MATERIALS REMOVED DURING DEMOLITION THAT WILL NOT BE REUSED. THE CONTRACTOR IS RESPONSIBLE TO REMOVE FROM SITE ANY MATERIALS NOT CLAIMED BY THE OWNER.
8. ALL EXISTING SPRINKLERS AND PIPING SHOWN ARE BASED ON FIELD OBSERVATION WHERE POSSIBLE. CONTRACTOR SHALL FIELD VERIFY ALL EXISTING SPRINKLER AND PIPING LOCATIONS IN RELATION TO RENOVATED AREAS AS REQUIRED.
9. CONTRACTOR TO COORDINATE ANY REMOVAL OR REPLACEMENT OF EXISTING CEILINGS WITH OWNER/ARHCITECT PRIOR TO CONSTRUCTION. IF EXISTING CEILINGS ARE TO BE REMOVED OR REPLACED, THE EXISTING CEILING LEVEL SPRINKLERS SHALL BE REMOVED AS WELL. CUT AND CAP BRANCH PIPING AS CLOSE TO MAIN AS POSSIBLE AND PREPARE PIPING FOR NEW SPRINKLER CONNECTION.

Client:

16-22 Union Street - Apartment Building

Client: Empire Property Construction
16-22 Union St.
Wilkes-Barre, Pa 18701

Consultants:

DMG
design management group
consulting engineers
570 299 7520
dmgeng.com

CAM architect
CAM architect, LLC
ARCHITECTS | PLANNERS
606 North Main St. Wilkes-Barre, PA 18705
T | 570| 824.3320
F | 570| 606.4966
www.camarchus.com

© 2026 CAM ARCHITECT

Seals:

PRELIMINARY - NOT FOR CONSTRUCTION
THE INFORMATION PROVIDED IS FOR INFORMATIONAL PURPOSES ONLY AND MAY NOT BE REPRODUCED OR SCALED. DO NOT START CONSTRUCTION WITHOUT A SEALED SET OF CONSTRUCTION DOCUMENTS FROM THE ARCHITECT.

Revisions | Issues

No: Date:

Phase:
PERMIT/PRICING

Project: Apartment Building
Date: 06/15/2026
Drawn: NW Checked: KJS
Scale: AS NOTED
Sheet:

FIRE PROTECTION FLOOR PLANS - DEMOLITION

FP-4

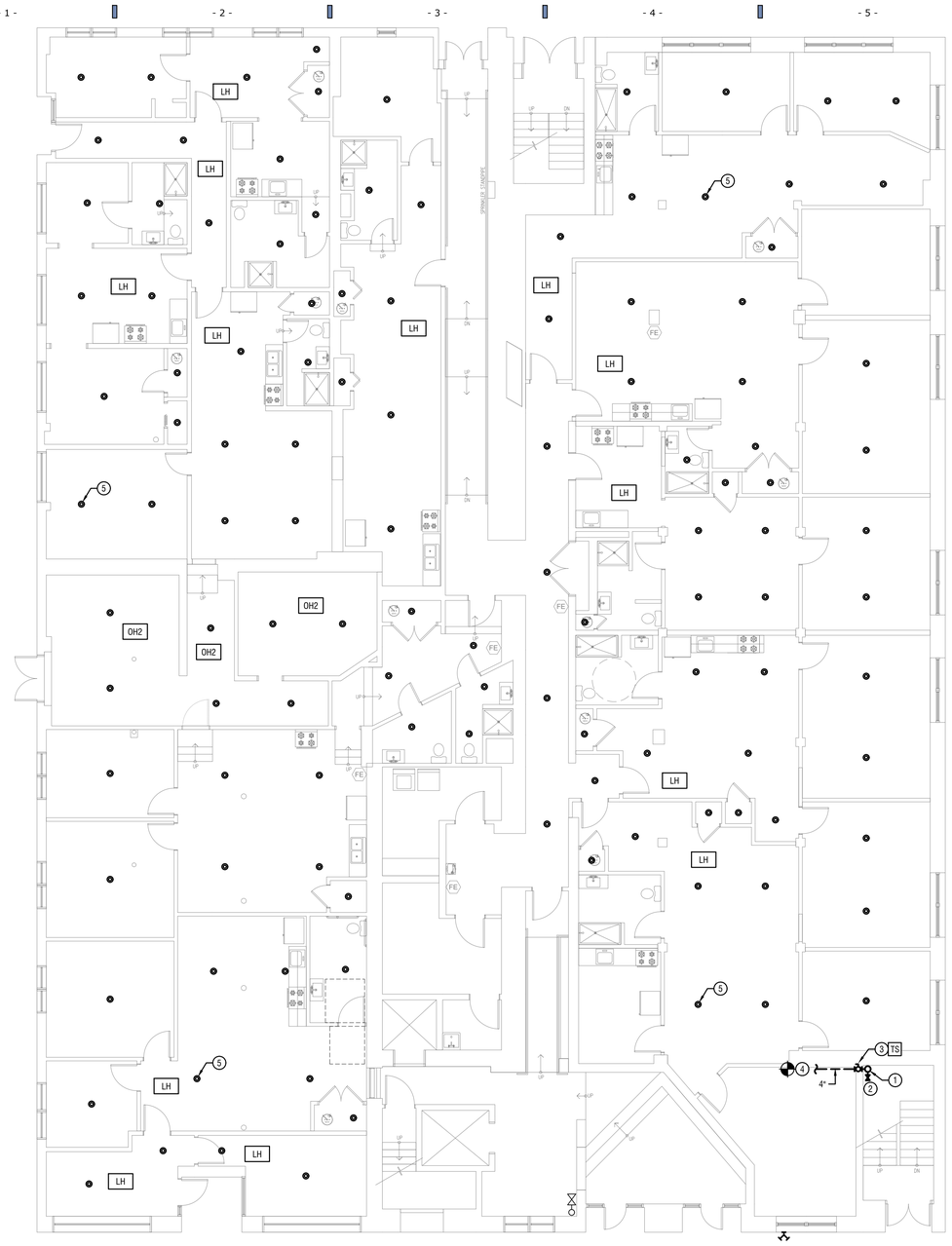

1 FP-5 FIRE PROTECTION NEW PLAN - FIRST FLOOR
SCALE: 1/8" = 1'-0"

BRANCH PIPING AND SPRINKLERS NOT ALL SHOWN. THE FIRE PROTECTION CONTRACTOR SHALL PROVIDE ALL BRANCH PIPING BY HYDRAULIC CALCULATIONS AND SPRINKLER LOCATIONS AS REQUIRED TO MEET NFPA 13 COVERAGE

KEYED CONSTRUCTION NOTES

1. NEW 4" CLASS I MANUAL WET STANDPIPE WITHIN STAIRWELL. COORDINATE FINAL LOCATION OF VERTICAL STANDPIPE WITHIN STAIRWELL WITH ALL STRUCTURAL ELEMENTS AND REQUIRED STAIRWELL EGRESS CLEARANCES PRIOR TO INSTALLATION.
2. PROVIDE 2-1/2" HOSE CONNECTIONS WITH APPROVED FIRE DEPARTMENT THREADS ON EACH INDIVIDUAL FLOOR LEVEL. SEE STANDPIPE DETAIL FOR MORE INFORMATION. COORDINATE FINAL HOSE CONNECTION LOCATIONS AND DETAILS (HOSE CONNECTION SIZE, TYPE, THREADS, ETC.) WITH LOCAL FIRE DEPARTMENT PRIOR TO INSTALLATION.
3. LISTED INDICATING STANDPIPE ISOLATION VALVE TO ALLOW ISOLATING OF STANDPIPE WITHOUT INTERRUPTING THE SUPPLY TO OTHER STANDPIPES FROM THE SAME SOURCE OF SUPPLY. COORDINATE FINAL ACCESSIBLE INSTALLATION LOCATION WITHIN BASEMENT LEVEL BELOW WITH OWNER/ARCHITECT PRIOR TO CONSTRUCTION.
4. CONNECT NEW STANDPIPE FEED MAIN TO EXISTING PIPING AT BASEMENT CEILING HEIGHT NEAR SPRINKLER SERVICE ENTRANCE LOCATION. PROVIDE HOSE CONNECTION AT BASEMENT LEVEL WITHIN STAIRWELL. FIELD VERIFY EXISTING MAIN PIPING LOCATIONS AND BEST POSSIBLE POINT OF NEW CONNECTION.
5. PROVIDE NEW CONCEALED TYPE PENDENT SPRINKLERS AT CEILING LEVEL (TYPICAL) WITHIN ALL NEW RENOVATION AREAS. COORDINATE FINAL LOCATIONS WITH NFPA-13 REQUIREMENTS, CEILING OBSTRUCTIONS, LIGHTS, FANS, DIFFUSERS, AND REFLECTED CEILING PLAN. CONNECT BRANCH PIPING TO NEAREST ADEQUATELY SIZED PIPING. PROVIDE ADDITIONAL UPRIGHT HEADS WITHIN CONCEALED COMBUSTIBLE SPACES ABOVE CEILING IF REQUIRED BY NFPA-13 AND NO EXISTING SPRINKLER COVERAGE IS ADEQUATELY PROVIDED. SEE DETAIL FOR MORE INFORMATION.

GENERAL CONSTRUCTION NOTES

1. THIS DRAWING IS FOR REFERENCES PURPOSE ONLY. THE FIRE SPRINKLER CONTRACTOR SHALL BE RESPONSIBLE FOR THE FULL DESIGN OF THE SPRINKLER SYSTEM AND ITS CONFORMANCE TO NFPA 13, LOCAL CODE, AND OWNERS INSURANCE AGENCY REQUIREMENTS. THE FIRE PROTECTION CONTRACTOR SHALL INCLUDE ALL NEEDED OFFSETS, CHANGES IN DIRECTION, TRANSITIONS, ETC. NEEDED FOR COMPLETE AND OPERATIONAL SYSTEMS.
2. SPRINKLER HEAD LOCATIONS TO BE DETERMINED BY HYDRAULIC CALCULATIONS AND NFPA-13 REQUIREMENTS (TYPICAL FOR ALL SPRINKLER HEADS).
3. PIPE SIZES AND LOCATIONS TO BE DETERMINED BY HYDRAULIC CALCULATIONS AND NFPA-13 REQUIREMENTS (TYPICAL FOR ALL PIPE SIZES AND LOCATIONS).
4. COORDINATE FINAL SPRINKLER LOCATIONS WITH REFLECTED CEILING PLAN, DIFFUSERS, LIGHTS, KITCHEN HOODS, STRUCURAL ELEMENTS, CEILING OBSTRUCTIONS, ETC. AND NFPA-13 REQUIREMENTS.
5. SPRINKLER HEADS SHALL BE CONCEALED TYPE PENDANT HEADS IN AREAS WITH HARD OR DROP CEILINGS, OR UPRIGHT HEADS IN OPEN AREAS EXPOSED TO STRUCTURE ABOVE. SEE ARCHITECTURAL RCP PLANS FOR MORE INFORMATION.
6. ALL PIPE SIZES, ROUTING, LOCATIONS, ETC. SHOWN ON THIS DRAWING ARE FOR REFERENCE ONLY. CONTRACTOR MAY RESIZE AND LOCATE PIPING PER HYDRAULIC CALCULATIONS TO PROVIDE MORE ECONOMICAL SYSTEM WHILE STILL MEETING ALL NFPA-13 REQUIREMENTS.
7. SPRINKLER HEAD LOCATIONS AND QUANTITIES ARE SHOWN FOR REFERENCE ONLY. FINAL LOCATIONS, QUANTITIES, TYPES, ETC. MAY VARY BASED ON ACTUAL FIELD CONDITIONS, CEILING OBSTRUCTIONS, HYDRAULIC REQUIREMENTS, ROOM DIMENSIONS/USES, ETC. SPRINKLER CONTRACTOR SHALL INSTALL ALL HEADS IN ACCORDANCE WITH NFPA-13 AND/OR MANUFACTURER'S REQUIREMENTS.

2 FP-3 FIRE PROTECTION NEW PLAN - SECOND FLOOR
SCALE: 1/8" = 1'-0"

BRANCH PIPING AND SPRINKLERS NOT ALL SHOWN. THE FIRE PROTECTION CONTRACTOR SHALL PROVIDE ALL BRANCH PIPING BY HYDRAULIC CALCULATIONS AND SPRINKLER LOCATIONS AS REQUIRED TO MEET NFPA 13 COVERAGE

KEYED CONSTRUCTION NOTES

1. NEW 4" CLASS I MANUAL WET STANDPIPE WITHIN STAIRWELL. COORDINATE FINAL LOCATION OF VERTICAL STANDPIPE WITHIN STAIRWELL WITH ALL STRUCTURAL ELEMENTS AND REQUIRED STAIRWELL EGRESS CLEARANCES PRIOR TO INSTALLATION.
2. PROVIDE 2-1/2" HOSE CONNECTIONS WITH APPROVED FIRE DEPARTMENT THREADS ON EACH INDIVIDUAL FLOOR LEVEL. SEE STANDPIPE DETAIL FOR MORE INFORMATION. COORDINATE FINAL HOSE CONNECTION LOCATIONS AND DETAILS (HOSE CONNECTION SIZE, TYPE, THREADS, ETC.) WITH LOCAL FIRE DEPARTMENT PRIOR TO INSTALLATION.
3. PROVIDE NEW CONCEALED TYPE PENDENT SPRINKLERS AT CEILING LEVEL (TYPICAL) WITHIN ALL NEW RENOVATION AREAS. COORDINATE FINAL LOCATIONS WITH NFPA-13 REQUIREMENTS, CEILING OBSTRUCTIONS, LIGHTS, FANS, DIFFUSERS, AND REFLECTED CEILING PLAN. CONNECT BRANCH PIPING TO NEAREST ADEQUATELY SIZED PIPING. PROVIDE ADDITIONAL UPRIGHT HEADS WITHIN CONCEALED COMBUSTIBLE SPACES ABOVE CEILING IF REQUIRED BY NFPA-13 AND NO EXISTING SPRINKLER COVERAGE IS ADEQUATELY PROVIDED. SEE DETAIL FOR MORE INFORMATION.

GENERAL CONSTRUCTION NOTES

1. THIS DRAWING IS FOR REFERENCES PURPOSE ONLY. THE FIRE SPRINKLER CONTRACTOR SHALL BE RESPONSIBLE FOR THE FULL DESIGN OF THE SPRINKLER SYSTEM AND ITS CONFORMANCE TO NFPA 13, LOCAL CODE, AND OWNERS INSURANCE AGENCY REQUIREMENTS. THE FIRE PROTECTION CONTRACTOR SHALL INCLUDE ALL NEEDED OFFSETS, CHANGES IN DIRECTION, TRANSITIONS, ETC. NEEDED FOR COMPLETE AND OPERATIONAL SYSTEMS.
2. SPRINKLER HEAD LOCATIONS TO BE DETERMINED BY HYDRAULIC CALCULATIONS AND NFPA-13 REQUIREMENTS (TYPICAL FOR ALL SPRINKLER HEADS).
3. PIPE SIZES AND LOCATIONS TO BE DETERMINED BY HYDRAULIC CALCULATIONS AND NFPA-13 REQUIREMENTS (TYPICAL FOR ALL PIPE SIZES AND LOCATIONS).
4. COORDINATE FINAL SPRINKLER LOCATIONS WITH REFLECTED CEILING PLAN, DIFFUSERS, LIGHTS, KITCHEN HOODS, STRUCURAL ELEMENTS, CEILING OBSTRUCTIONS, ETC. AND NFPA-13 REQUIREMENTS.
5. SPRINKLER HEADS SHALL BE CONCEALED TYPE PENDANT HEADS IN AREAS WITH HARD OR DROP CEILINGS, OR UPRIGHT HEADS IN OPEN AREAS EXPOSED TO STRUCTURE ABOVE. SEE ARCHITECTURAL RCP PLANS FOR MORE INFORMATION.
6. ALL PIPE SIZES, ROUTING, LOCATIONS, ETC. SHOWN ON THIS DRAWING ARE FOR REFERENCE ONLY. CONTRACTOR MAY RESIZE AND LOCATE PIPING PER HYDRAULIC CALCULATIONS TO PROVIDE MORE ECONOMICAL SYSTEM WHILE STILL MEETING ALL NFPA-13 REQUIREMENTS.
7. SPRINKLER HEAD LOCATIONS AND QUANTITIES ARE SHOWN FOR REFERENCE ONLY. FINAL LOCATIONS, QUANTITIES, TYPES, ETC. MAY VARY BASED ON ACTUAL FIELD CONDITIONS, CEILING OBSTRUCTIONS, HYDRAULIC REQUIREMENTS, ROOM DIMENSIONS/USES, ETC. SPRINKLER CONTRACTOR SHALL INSTALL ALL HEADS IN ACCORDANCE WITH NFPA-13 AND/OR MANUFACTURER'S REQUIREMENTS.

Client:
16-22 Union Street - Apartment Building
Client: Empire Property Construction
16-22 Union St.
Wilkes-Barre, Pa 18701

Consultants:
DMG
design management group
consulting engineers
570 299 7520
dmgeng.com

CAM architect
CAM architect, LLC
ARCHITECTS | PLANNERS
406 North Main St. Wilkes-Barre, PA 18705
T | 570| 824.3320
F | 570| 606.4966
www.camarchus.com

© 2026 CAM ARCHITECT

Seals:
PRELIMINARY - NOT FOR CONSTRUCTION
THIS DOCUMENT, THIS DRAWING IS FOR INFORMATION PURPOSES ONLY AND IS NOT INTENDED FOR CONSTRUCTION, BIDDING, OR NOT INTENDED FOR CONSTRUCTION SEALED BY A PROFESSIONAL ARCHITECT. IF CONSTRUCTION DOCUMENTS FROM THE ARCHITECT.

Revisions | Issues
No: Date:

Phase:
PERMIT/PRICING

Project: Apartment Building
Date: 06/15/2026
Drawn: NW Checked: KJS
Scale: AS NOTED
Sheet:
FIRE PROTECTION FLOOR PLANS - NEW
FP-5

1 FP-6 FIRE PROTECTION NEW PLAN - THIRD FLOOR

SCALE: 1/8" = 1'-0"

BRANCH PIPING AND SPRINKLERS NOT ALL SHOWN. THE FIRE PROTECTION CONTRACTOR SHALL PROVIDE ALL BRANCH PIPING BY HYDRAULIC CALCULATIONS AND SPRINKLER LOCATIONS AS REQUIRED TO MEET NFPA 13 COVERAGE

KEYED CONSTRUCTION NOTES

1. NEW 4" CLASS I MANUAL WET STANDPIPE WITHIN STAIRWELL. COORDINATE FINAL LOCATION OF VERTICAL STANDPIPE WITHIN STAIRWELL WITH ALL STRUCTURAL ELEMENTS AND REQUIRED STAIRWELL EGRESS CLEARANCES PRIOR TO INSTALLATION.
2. PROVIDE 2-1/2" HOSE CONNECTIONS WITH APPROVED FIRE DEPARTMENT THREADS ON EACH INDIVIDUAL FLOOR LEVEL. SEE STANDPIPE DETAIL FOR MORE INFORMATION. COORDINATE FINAL HOSE CONNECTION LOCATIONS AND DETAILS (HOSE CONNECTION SIZE, TYPE, THREADS, ETC.) WITH LOCAL FIRE DEPARTMENT PRIOR TO INSTALLATION.
3. PROVIDE NEW CONCEALED TYPE PENDENT SPRINKLERS AT CEILING LEVEL (TYPICAL) WITHIN ALL NEW RENOVATION AREAS. COORDINATE FINAL LOCATIONS WITH NFPA-13 REQUIREMENTS, CEILING OBSTRUCTIONS, LIGHTS, FANS, DIFFUSERS, AND REFLECTED CEILING PLAN. CONNECT BRANCH PIPING TO NEAREST ADEQUATELY SIZED PIPING. PROVIDE ADDITIONAL UPRIGHT HEADS WITHIN CONCEALED COMBUSTIBLE SPACES ABOVE CEILING IF REQUIRED BY NFPA-13 AND NO EXISTING SPRINKLER COVERAGE IS ADEQUATELY PROVIDED. SEE DETAIL FOR MORE INFORMATION.

GENERAL CONSTRUCTION NOTES

1. THIS DRAWING IS FOR REFERENCES PURPOSE ONLY. THE FIRE SPRINKLER CONTRACTOR SHALL BE RESPONSIBLE FOR THE FULL DESIGN OF THE SPRINKLER SYSTEM AND ITS CONFORMANCE TO NFPA 13, LOCAL CODE, AND OWNERS INSURANCE AGENCY REQUIREMENTS. THE FIRE PROTECTION CONTRACTOR SHALL INCLUDE ALL NEEDED OFFSETS, CHANGES IN DIRECTION, TRANSITIONS, ETC. NEEDED FOR COMPLETE AND OPERATIONAL SYSTEMS.
2. SPRINKLER HEAD LOCATIONS TO BE DETERMINED BY HYDRAULIC CALCULATIONS AND NFPA-13 REQUIREMENTS (TYPICAL FOR ALL SPRINKLER HEADS).
3. PIPE SIZES AND LOCATIONS TO BE DETERMINED BY HYDRAULIC CALCULATIONS AND NFPA-13 REQUIREMENTS (TYPICAL FOR ALL PIPE SIZES AND LOCATIONS).
4. COORDINATE FINAL SPRINKLER LOCATIONS WITH REFLECTED CEILING PLAN, DIFFUSERS, LIGHTS, KITCHEN HOODS, STRUCURAL ELEMENTS, CEILING OBSTRUCTIONS, ETC. AND NFPA-13 REQUIREMENTS.
5. SPRINKLER HEADS SHALL BE CONCEALED TYPE PENDANT HEADS IN AREAS WITH HARD OR DROP CEILINGS, OR UPRIGHT HEADS IN OPEN AREAS EXPOSED TO STRUCTURE ABOVE. SEE ARCHITECTURAL RCP PLANS FOR MORE INFORMATION.
6. ALL PIPE SIZES, ROUTING, LOCATIONS, ETC. SHOWN ON THIS DRAWING ARE FOR REFERENCE ONLY. CONTRACTOR MAY RESIZE AND LOCATE PIPING PER HYDRAULIC CALCULATIONS TO PROVIDE MORE ECONOMICAL SYSTEM WHILE STILL MEETING ALL NFPA-13 REQUIREMENTS.
7. SPRINKLER HEAD LOCATIONS AND QUANTITIES ARE SHOWN FOR REFERENCE ONLY. FINAL LOCATIONS, QUANTITIES, TYPES, ETC. MAY VARY BASED ON ACTUAL FIELD CONDITIONS, CEILING OBSTRUCTIONS, HYDRAULIC REQUIREMENTS, ROOM DIMENSIONS/USES, ETC. SPRINKLER CONTRACTOR SHALL INSTALL ALL HEADS IN ACCORDANCE WITH NFPA-13 AND/OR MANUFACTURER'S REQUIREMENTS.

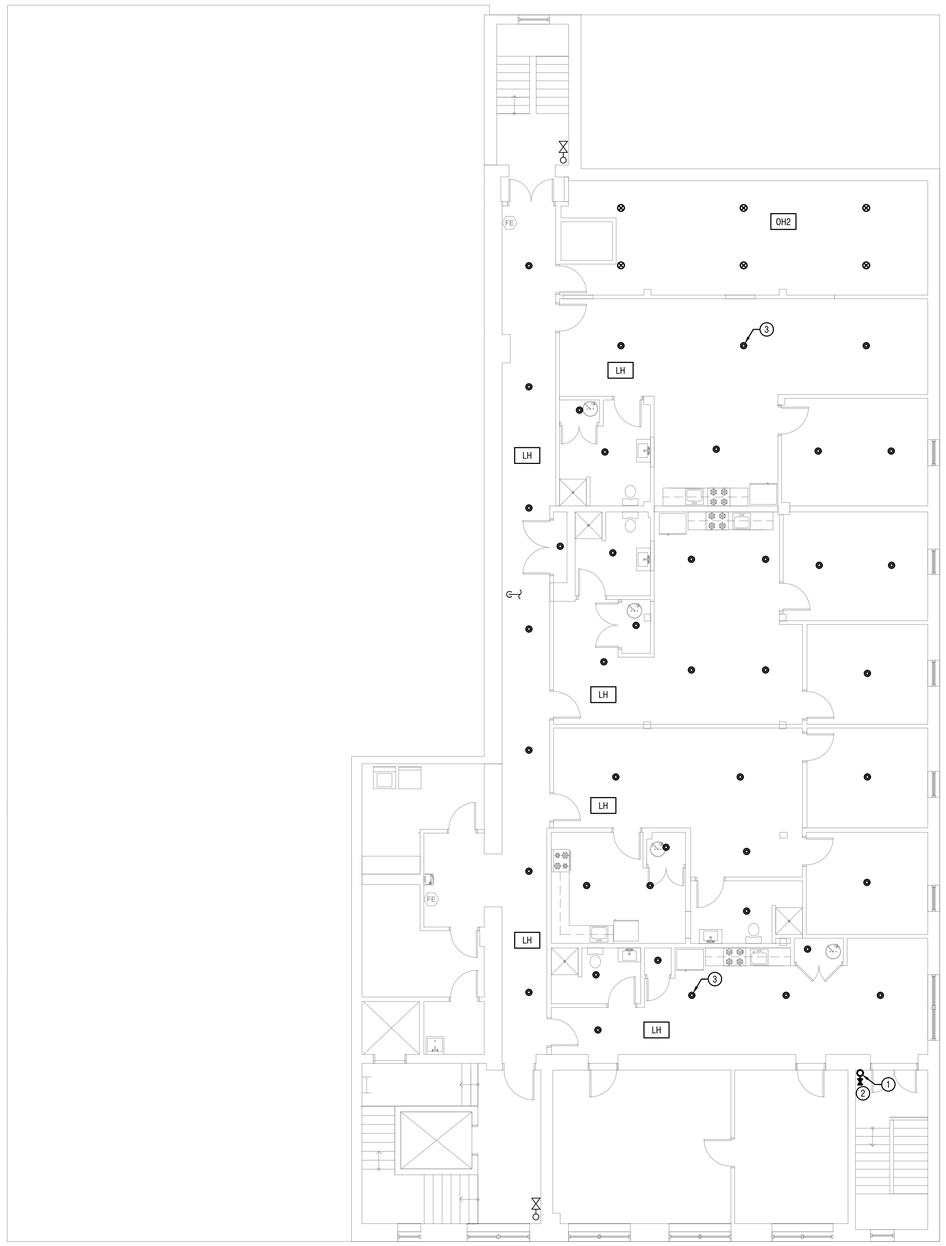

2 FP-3 FIRE PROTECTION NEW PLAN - FOURTH FLOOR

SCALE: 1/8" = 1'-0"

BRANCH PIPING AND SPRINKLERS NOT ALL SHOWN. THE FIRE PROTECTION CONTRACTOR SHALL PROVIDE ALL BRANCH PIPING BY HYDRAULIC CALCULATIONS AND SPRINKLER LOCATIONS AS REQUIRED TO MEET NFPA 13 COVERAGE

KEYED CONSTRUCTION NOTES

1. NEW 4" CLASS I MANUAL WET STANDPIPE WITHIN STAIRWELL. COORDINATE FINAL LOCATION OF VERTICAL STANDPIPE WITHIN STAIRWELL WITH ALL STRUCTURAL ELEMENTS AND REQUIRED STAIRWELL EGRESS CLEARANCES PRIOR TO INSTALLATION.
2. PROVIDE 2-1/2" HOSE CONNECTIONS WITH APPROVED FIRE DEPARTMENT THREADS ON EACH INDIVIDUAL FLOOR LEVEL. SEE STANDPIPE DETAIL FOR MORE INFORMATION. COORDINATE FINAL HOSE CONNECTION LOCATIONS AND DETAILS (HOSE CONNECTION SIZE, TYPE, THREADS, ETC.) WITH LOCAL FIRE DEPARTMENT PRIOR TO INSTALLATION.
3. PROVIDE NEW CONCEALED TYPE PENDENT SPRINKLERS AT CEILING LEVEL (TYPICAL) WITHIN ALL NEW RENOVATION AREAS. COORDINATE FINAL LOCATIONS WITH NFPA-13 REQUIREMENTS, CEILING OBSTRUCTIONS, LIGHTS, FANS, DIFFUSERS, AND REFLECTED CEILING PLAN. CONNECT BRANCH PIPING TO NEAREST ADEQUATELY SIZED PIPING. PROVIDE ADDITIONAL UPRIGHT HEADS WITHIN CONCEALED COMBUSTIBLE SPACES ABOVE CEILING IF REQUIRED BY NFPA-13 AND NO EXISTING SPRINKLER COVERAGE IS ADEQUATELY PROVIDED. SEE DETAIL FOR MORE INFORMATION.

GENERAL CONSTRUCTION NOTES

1. THIS DRAWING IS FOR REFERENCES PURPOSE ONLY. THE FIRE SPRINKLER CONTRACTOR SHALL BE RESPONSIBLE FOR THE FULL DESIGN OF THE SPRINKLER SYSTEM AND ITS CONFORMANCE TO NFPA 13, LOCAL CODE, AND OWNERS INSURANCE AGENCY REQUIREMENTS. THE FIRE PROTECTION CONTRACTOR SHALL INCLUDE ALL NEEDED OFFSETS, CHANGES IN DIRECTION, TRANSITIONS, ETC. NEEDED FOR COMPLETE AND OPERATIONAL SYSTEMS.
2. SPRINKLER HEAD LOCATIONS TO BE DETERMINED BY HYDRAULIC CALCULATIONS AND NFPA-13 REQUIREMENTS (TYPICAL FOR ALL SPRINKLER HEADS).
3. PIPE SIZES AND LOCATIONS TO BE DETERMINED BY HYDRAULIC CALCULATIONS AND NFPA-13 REQUIREMENTS (TYPICAL FOR ALL PIPE SIZES AND LOCATIONS).
4. COORDINATE FINAL SPRINKLER LOCATIONS WITH REFLECTED CEILING PLAN, DIFFUSERS, LIGHTS, KITCHEN HOODS, STRUCURAL ELEMENTS, CEILING OBSTRUCTIONS, ETC. AND NFPA-13 REQUIREMENTS.
5. SPRINKLER HEADS SHALL BE CONCEALED TYPE PENDANT HEADS IN AREAS WITH HARD OR DROP CEILINGS, OR UPRIGHT HEADS IN OPEN AREAS EXPOSED TO STRUCTURE ABOVE. SEE ARCHITECTURAL RCP PLANS FOR MORE INFORMATION.
6. ALL PIPE SIZES, ROUTING, LOCATIONS, ETC. SHOWN ON THIS DRAWING ARE FOR REFERENCE ONLY. CONTRACTOR MAY RESIZE AND LOCATE PIPING PER HYDRAULIC CALCULATIONS TO PROVIDE MORE ECONOMICAL SYSTEM WHILE STILL MEETING ALL NFPA-13 REQUIREMENTS.
7. SPRINKLER HEAD LOCATIONS AND QUANTITIES ARE SHOWN FOR REFERENCE ONLY. FINAL LOCATIONS, QUANTITIES, TYPES, ETC. MAY VARY BASED ON ACTUAL FIELD CONDITIONS, CEILING OBSTRUCTIONS, HYDRAULIC REQUIREMENTS, ROOM DIMENSIONS/USES, ETC. SPRINKLER CONTRACTOR SHALL INSTALL ALL HEADS IN ACCORDANCE WITH NFPA-13 AND/OR MANUFACTURER'S REQUIREMENTS.

Client:

16-22 Union Street - Apartment Building

Client: Empire Property Construction
16-22 Union St.
Wilkes-Barre, Pa 18701

Consultants:

DMG
design management group
consulting engineers
570 299 7320
dmgeng.com

CAM architect
CAM architect, LLC
ARCHITECTS | PLANNERS
606 North Main St. Wilkes-Barre, PA 18705
T | 570| 824.3320
F | 570| 606.4966
www.camarchus.com

© 2026 CAM ARCHITECT

Seals:

PRELIMINARY - NOT FOR CONSTRUCTION
THIS DOCUMENT IS LEGALLY INCOMPLETE FOR PERMITTING PURPOSES ONLY AND IS NOT INTENDED FOR CONSTRUCTION OR BIDDING. DO AND NOT START CONSTRUCTION WITHOUT A SEALED SET OF CONSTRUCTION DOCUMENTS FROM THE ARCHITECT OF CONSTRUCTION DOCUMENTS.

Revisions | Issues

No: Date:

Phase:

PERMIT/PRICING

Project: Apartment Building
Date: 06/15/2026
Drawn: NW Checked: KJS
Scale: AS NOTED
Sheet:

FIRE PROTECTION FLOOR PLANS - NEW

FP-6

PRODUCT LEGEND	
1	INLET NIPPLE (1" MPT)
2	NUT
3	ISOLATION RING
4	COLLAR / WELD FITTING
5	STAINLESS STEEL FLEXIBLE BRAIDED HOSE (1" NOMINAL DIAMETER)
	(LENGTHS AVAILABLE 31", 36" 48", 60", & 72")
6	COLLAR / WELD FITTING
7	NUT
8	REDUCING OUTLET (AVAILABLE 1/2" OR 3/4" FMPT)
9	CENTER BRACKET ASSEMBLY
10	SQUARE BAR (AVAILABLE IN 24" AND 48" LENGTHS)
11	END BRACKET ASSEMBLY
12	SHEET METAL SCREW
13	VIC MECHANICAL-T OUTLET STYLE 922 FIRELOCK (1" FMPT)
SEE VICTAULIC SUBMITTAL NUMBER 10.85	

BRAIDED VICFLEX FLEXIBLE HOSE SPRINKLER ASSEMBLIES FOR CONCEALED PENDENT SPRINKLERS

NOTES:
1. REFER TO VICTAULIC SUBMITTAL 10.85 FOR ADDITIONAL DETAILS.

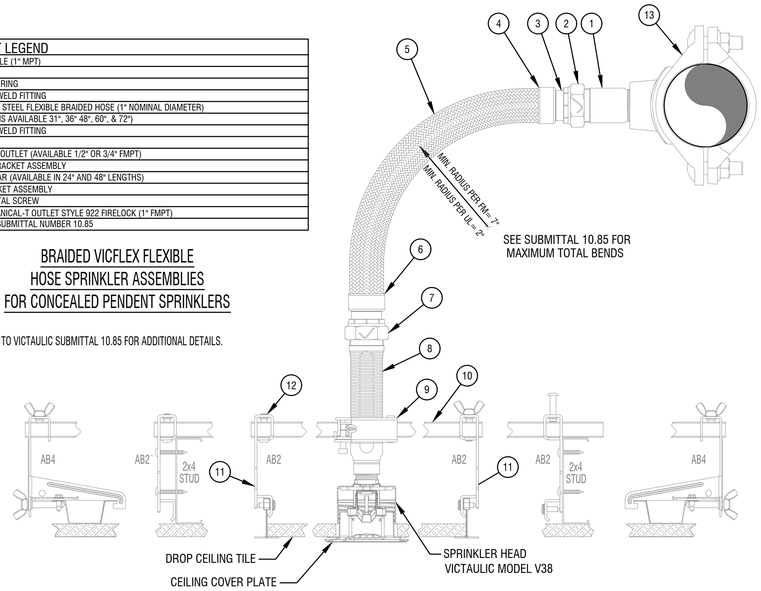

1 FP-7 CONCEALED SPRINKLER INSTALLATION DETAIL (BASIS OF DESIGN)
SCALE: NOT TO SCALE

STANDARD SPRAY UPRIGHT STANDARD AND QUICK RESPONSE VICTAULIC MODELS V2703 AND V2704

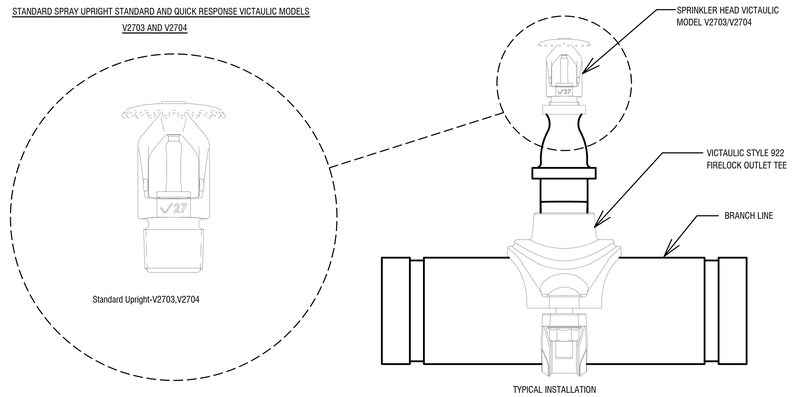

2 FP-7 UPRIGHT SPRINKLER INSTALLATION DETAIL (BASIS OF DESIGN)
SCALE: NOT TO SCALE

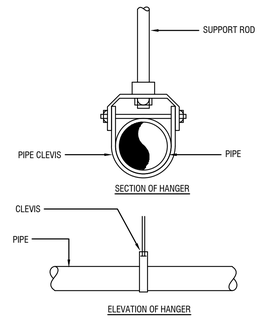

3 FP-7 SPRINKLER HANGER DETAIL
SCALE: NOT TO SCALE

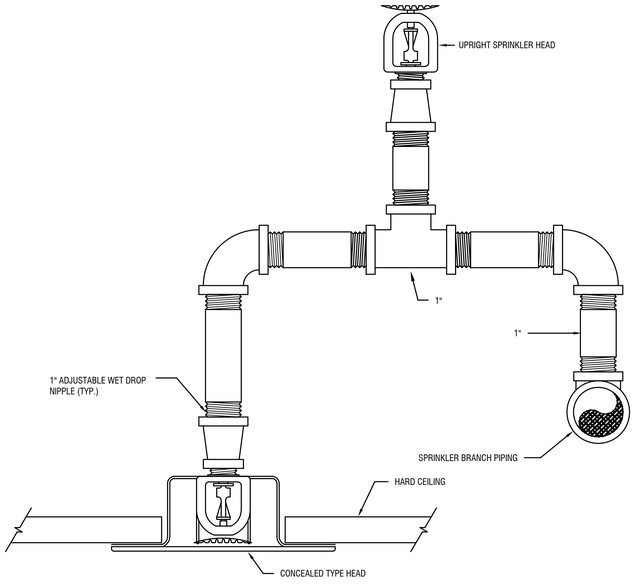

4 FP-7 TYPICAL SPRINKLER INSTALLATION ABOVE AND AT CEILING LEVEL
SCALE: N.T.S.

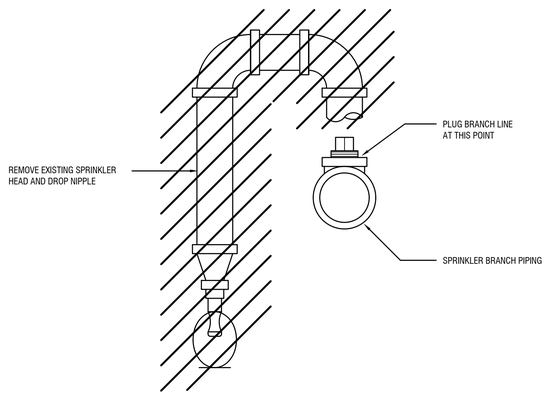

5 FP-7 SPRINKLER RETURN BEND REMOVAL DETAIL
SCALE: NOT TO SCALE

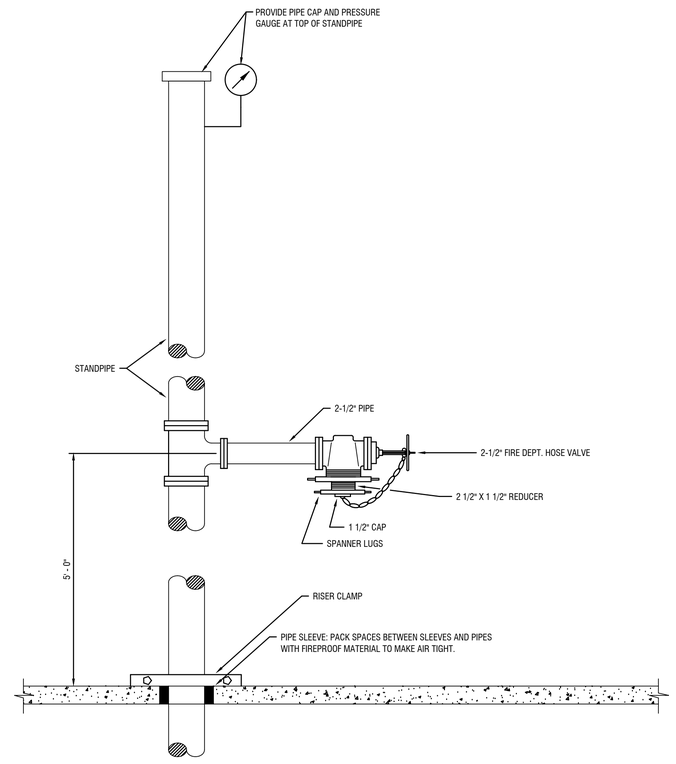

6 FP-7 STANDPIPE DETAIL
SCALE: NOT TO SCALE

Client:
16-22 Union Street - Apartment Building
Client: Empire Property Construction
16-22 Union St.
Wilkes-Barre, Pa 18701

Consultants:
DMG
design management group
consulting engineers
570 299 7520
dmgeng.com

CAM architect
CAM architect, LLC
ARCHITECTS | PLANNERS
608 North Main St. Wilkes-Barre, PA 18705
T | 570| 824.3320
F | 570| 606.4966
www.camarchus.com
© 2026 CAM ARCHITECT

Seals:
PRELIMINARY - NOT FOR CONSTRUCTION
THIS COPY OF THE DRAWING IS FOR INFORMATION PURPOSES ONLY. THIS DRAWING IS NOT INTENDED FOR CONSTRUCTION OR BIDDING. DO NOT USE THIS DOCUMENT FOR CONSTRUCTION WITHOUT A SEALED SET OF CONSTRUCTION DOCUMENTS FROM THE ARCHITECT.

Revisions | Issues
No: Date:

Phase:
PERMIT/PRICING

Project: Apartment Building
Date: 06/15/2026
Drawn: NW Checked: KJS
Scale: AS NOTED
Sheet:
FIRE PROTECTION DETAILS
FP-7