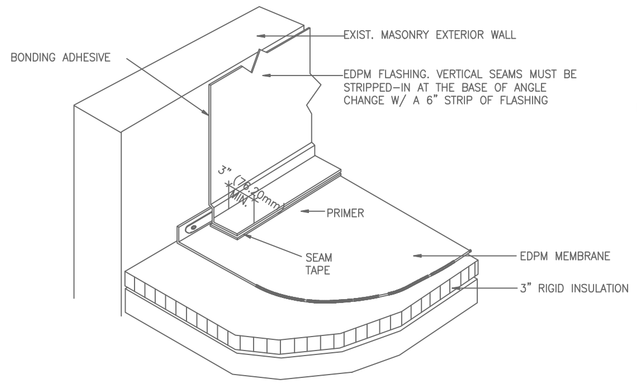

WALL BASE FLASHING
(VERTICALLY SECURED)

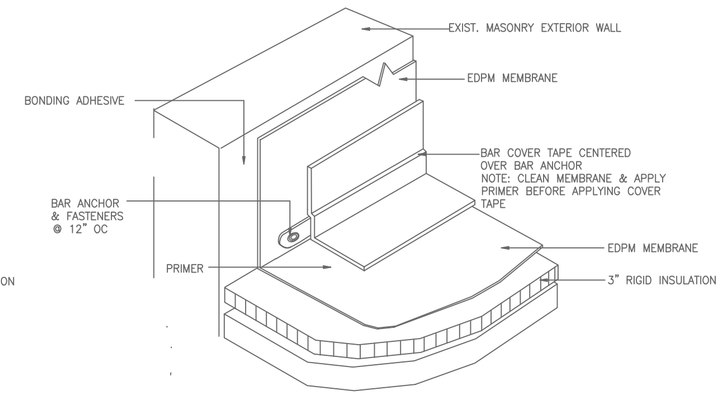

CONTINUOUS MEMBRANE
BASE FLASHING
(VERTICALLY SECURED)

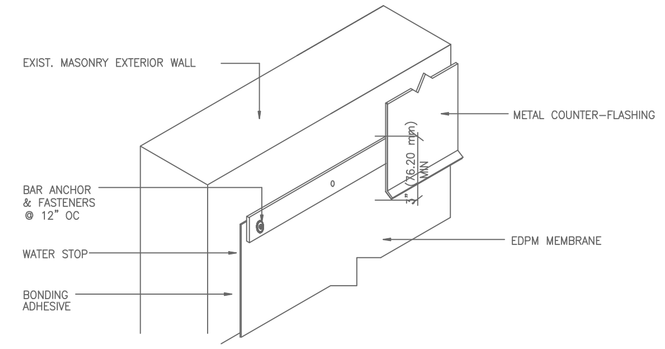

WALL TERMINATION
WITH COUNTER-FLASHING

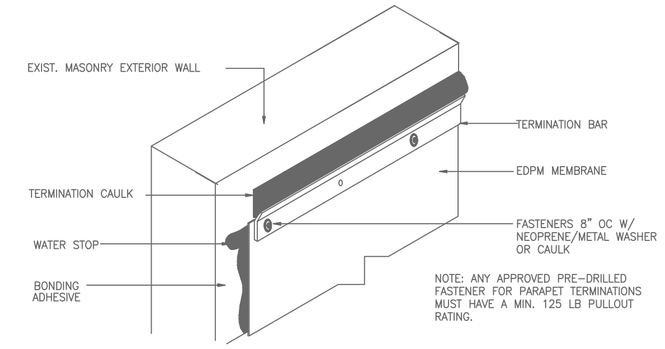

WALL TERMINATION

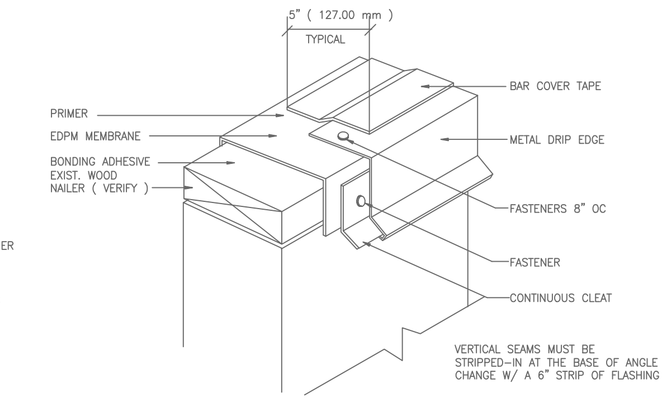

PARAPET WALL
WITH METAL EDGE

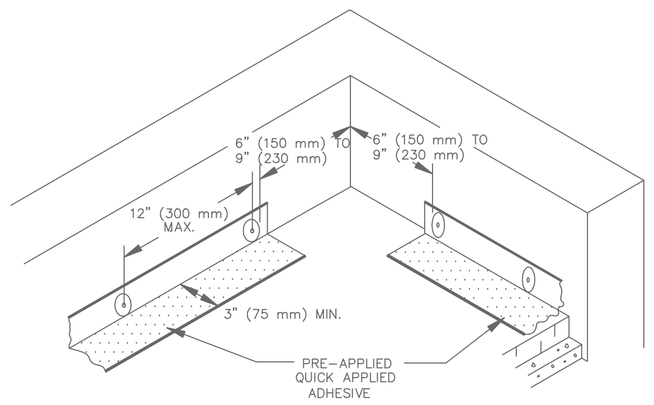

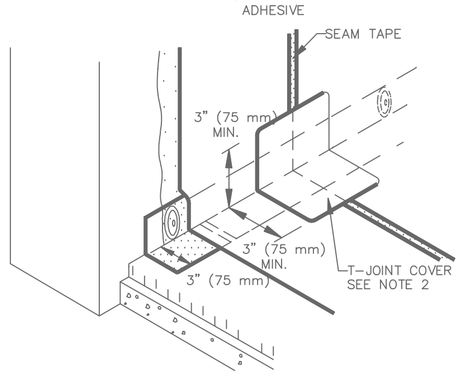

MEMBRANE SHOULD BE EXTENDED AT CORNERS TO PROVIDE COMPLETE COVERAGE OF THE TOP WALL SURFACE

NOTES:

1. FOR CORNER APPLICATION, SEE DETAILS.
2. 6" (150 mm) WIDE QUICK APPLIED UNCURED EPDM FLASHING MAY ALSO BE CENTERED OVER FIELD SPLICE AT ANGLE CHANGE.

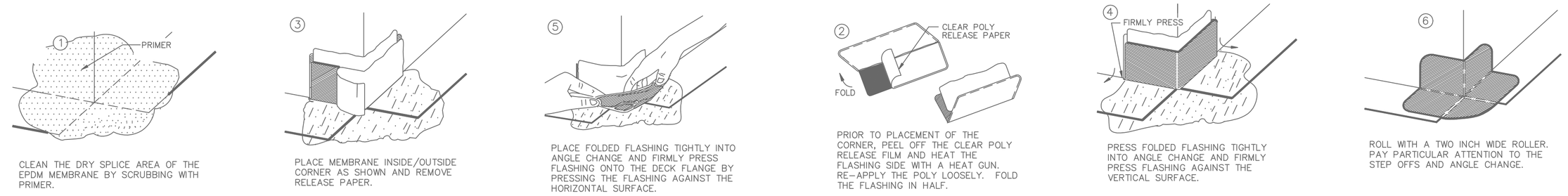

1. CLEAN THE DRY SPLICE AREA OF THE EPDM MEMBRANE BY SCRUBBING WITH PRIMER.
3. PLACE MEMBRANE INSIDE/OUTSIDE CORNER AS SHOWN AND REMOVE RELEASE PAPER.
5. PLACE FOLDED FLASHING TIGHTLY INTO ANGLE CHANGE AND FIRMLY PRESS FLASHING ONTO THE DECK FLANGE BY PRESSING THE FLASHING AGAINST THE HORIZONTAL SURFACE.
2. PRIOR TO PLACEMENT OF THE CORNER, PEEL OFF THE CLEAR POLY RELEASE FILM AND HEAT THE FLASHING SIDE WITH A HEAT GUN. RE-APPLY THE POLY LOOSELY. FOLD THE FLASHING IN HALF.
4. PRESS FOLDED FLASHING TIGHTLY INTO ANGLE CHANGE AND FIRMLY PRESS FLASHING AGAINST THE VERTICAL SURFACE.
6. ROLL WITH A TWO INCH WIDE ROLLER. PAY PARTICULAR ATTENTION TO THE STEP OFFS AND ANGLE CHANGE.

CORNER FLASHING DETAILS

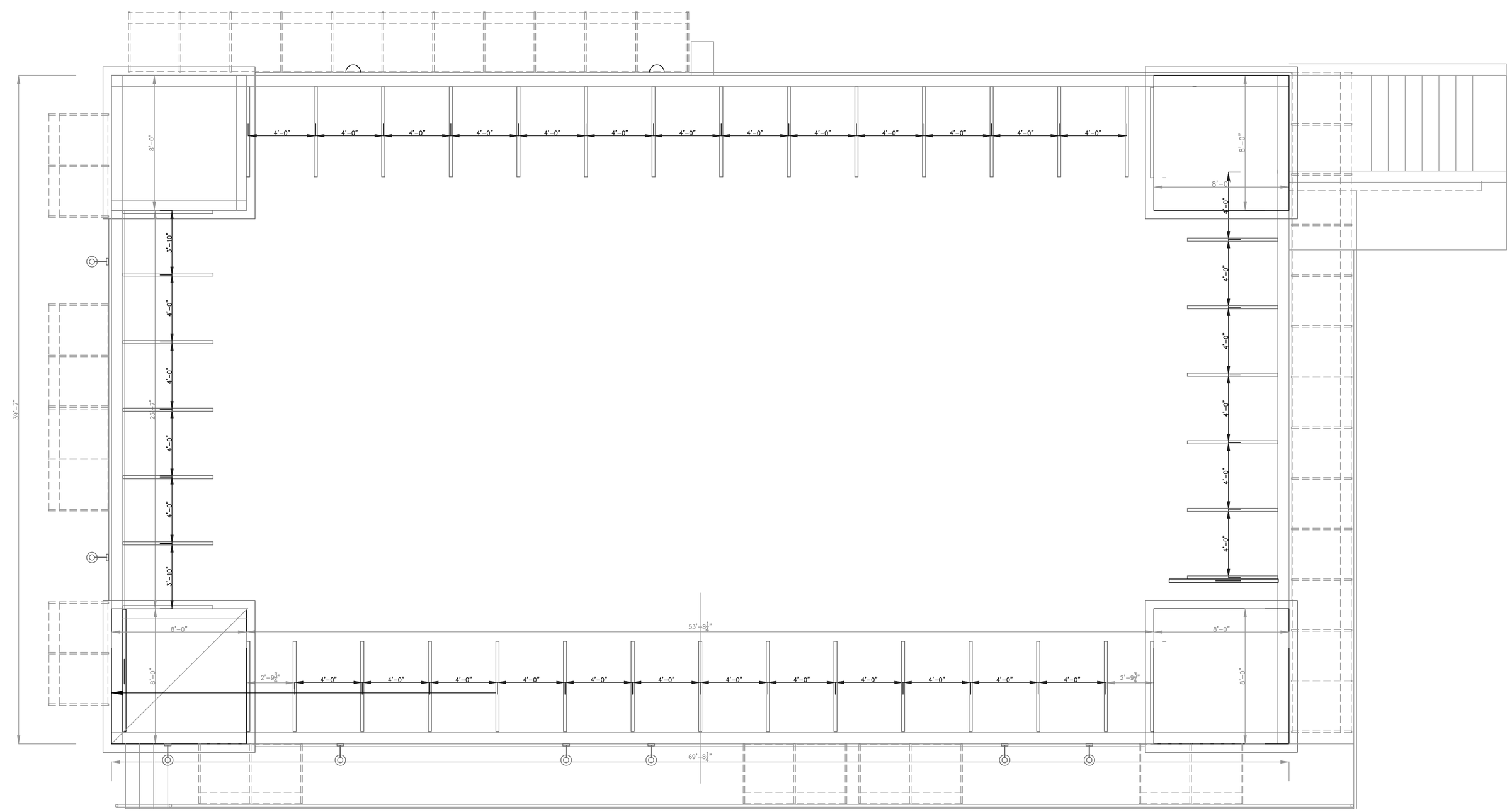

ROOF PLAN
SCALE: 1/4" = 1'-0"

© FRANK A. LOMBARDO ARCHITECT
NO USE, REPRODUCTION, OR DISSEMINATION MAY BE MADE OF THIS DRAWING, OR ITS IDEAS, CONCEPTS, DESIGNS, SKETCHES, MODELS, SPECIFICATIONS, PROGRAMS, SOFTWARE, REPORTS, OR OTHER INTANGIBLE DELIVERABLES, AS SET FORTH HEREIN WITHOUT PRIOR WRITTEN CONSENT OF FRANK A. LOMBARDO, R.A. ARCHITECT. THIS DRAWING IS & SHALL REMAIN THE PROPERTY OF FRANK A. LOMBARDO R.A.

THE LIABILITY OF FRANK A. LOMBARDO RA, ARCHITECT, FOR ERRORS, OMMISSIONS, OR NEGLIGENCE RESULTING IN PERSONAL INJURIES, PROPERTY DAMAGE, OR ANY CONSEQUENTIAL DAMAGES, IS LIMITED TO THE AMOUNT OF THE FEE PAID FOR THESE DRAWINGS. THE RETENTION OR USE OF ANY PART OF THESE DRAWINGS WILL CONSTITUTE AN ACCEPTANCE OF THIS LIMITATION OF LIABILITY. IF IT IS UNACCEPTABLE, THE CLIENT MUST NOTIFY FRANK A. LOMBARDO RA. IN WRITING BY CERTIFIED MAIL WITHIN SEVEN (7) DAYS OF THE RECEIPT OF THESE DRAWINGS. THE FEE CHARGED FOR THESE DRAWINGS IS BASED UPON THIS LIMITATION OF LIABILITY. IF THE CLIENT FAILS TO NOTIFY FRANK A. LOMBARDO RA. OF A REQUEST FOR A HIGHER LIMITATION OF LIABILITY, FRANK A. LOMBARDO RA. WILL NEGOTIATE ONE BASED UPON A HIGHER FEE BEING CHARGED FOR THE ADDITIONAL ASSUMPTION OF LIABILITY. FRANK A. LOMBARDO RA. ARCHITECT HAS NO LIABILITY TO PERSONS OTHER THAN THE CLIENT FOR WHOM THESE DRAWINGS WERE PREPARED. ANYONE OTHER THAN FRANK A. LOMBARDO RA, ARCHITECT'S CLIENT RELIES ON THESE DRAWINGS AT THEIR OWN RISK.

Frank A. Lombardo Architect
R.A. NY 15424

SUBMISSION LOG

NO.	DATE	DESCRIPTION
	1/17/24	CLIENT COMMENTS

AGENCY FILE NO.

BLDG DEPT.

FACADE RESTORATION
911 MONTAUK HIGHWAY
MASTIC-SHIRLEY, N.Y.

N

FRANK A. LOMBARDO
ARCHITECT
P.O. BOX 128
WESTHAMPTON, NY 11977-0128
tel.: 631-357-1438
E Mail : FrankLombardo@Yahoo.com

DRAWING TITLE :
ROOF PLAN,
FACADE FRAMING DETAILS
ROOFING DETAILS

DATE:	1/25/24
PROJECT NO.:	–
DWG. BY:	FAL
CHK BY:	FAL

DWG. NO.
A-103

PAGE NO. : 3 OF 5