GEO ACRES No.2 SUBDIVISION

DRAINAGE PLAN AND MAP OF TOPOGRAPHY LAYOUT

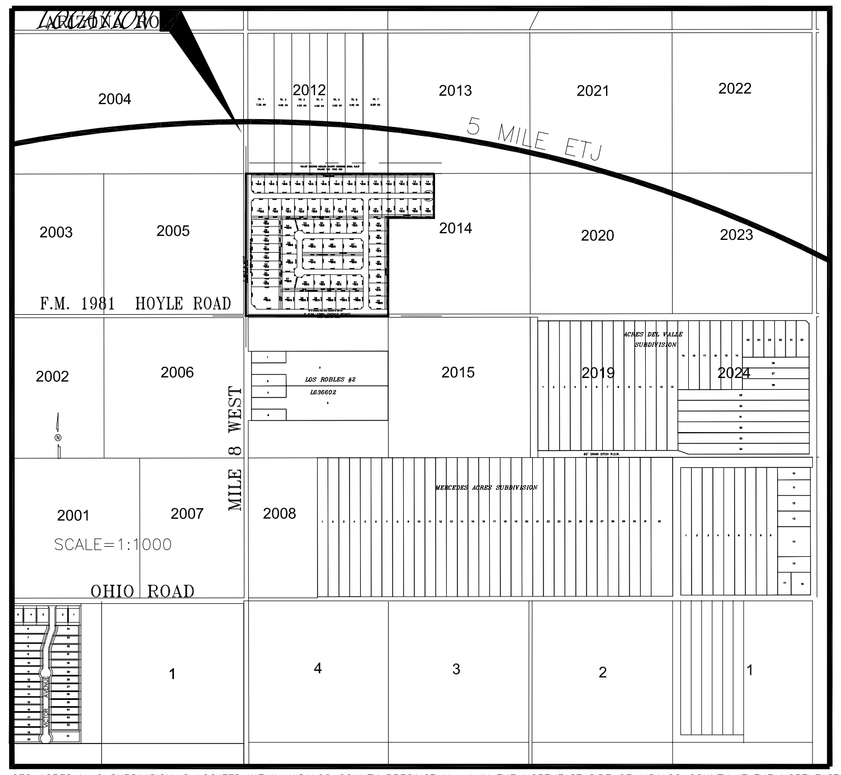

GEO ACRES No.2 SUBDIVISION IS LOCATED WITHIN HIDALGO COUNTY PRECINCT No. 4 IN THE NORTHEAST SIDE OF HIDALGO COUNTY AT THE NORTHEAST INTERSECTION OF MILE 8 NORTH ROAD AND FM 1981 HOYLE ROAD. THE ONLY NEARBY MUNICIPALITY IS THE CITY OF _____ ACCORDING TO THE OFFICIAL MAP IN THE OFFICE OF THE SECRETARY OF THE CITY OF _____ (POPULATION _____). GEO ACRES No.2 SUBDIVISION LIES APPROXIMATELY FOUR MILES FROM THE CITY LIMITS OF _____ AND IS WITHIN THE CITY'S 5 MILE EXTRATERRITORIAL JURISDICTION (ETJ) UNDER LOCAL GOVERNMENT CODE 212.001.

REVISED 04-24-08
DRAINAGE REPORT FOR
GEO ACRES No.2 SUBDIVISION

LOCATION OF PROPERTY:
42.877 ACRE TRACT OF ALL LOT 2011 BLOCK 6 AND 2.877 ACRES TRACT OUT OF LOT 2014 BLOCK 6 FRANCISCA OROZCO WINSTON SUBDIVISION VOLUME 7 PAGE 8 MAP RECORDS, HIDALGO COUNTY, TEXAS. THIS PROPERTY IS LOCATED IN THE ETJ OF THE CITY OF _____ AND IT IS LOCATED AT THE SOUTHEAST CORNER OF THE INTERSECTION OF MILE 8 WEST AND F.M 1981 (HOYLE ROAD)

EXISTING USE AND DRAINAGE PATTERN:
THE PROPERTY IS CURRENTLY OPEN LAND. THE CURRENT DRAINAGE RUNOFF FROM THIS PROPERTY IS OVER LAND IN A WESTERLY DIRECTION WHERE THE RUNOFF IS INTERCEPTED BY AN EXISTING OPEN DITCH ALONG THE NORTH LOT LINE OF THIS PROPERTY. THIS SECTION OF THE DITCH IS PART OF THE DRAINAGE DITCH SYSTEM OF HCID #8. THEREAFTER THE RUNOFF FLOWS NORTH WHERE IT IS INTERCEPTED BY AN EXISTING OPEN DITCH SYSTEM KNOWN AS THE LATERAL BEING PART OF THE HCDD #1 DRAINAGE DITCH SYSTEM. THEREAFTER, THE RUNOFF IS CONVEYED THROUGH THE EXISTING DRAINAGE DITCH NORTH THEN EASTWARD TOWARDS THE FLOODWAY.

PROPOSED USE AND DRAINAGE IMPROVEMENTS:
THE PROPOSED DEVELOPMENT CONTAIN 58 SINGLE FAMILY RESIDENCES AND 7 COMMERCIAL LOTS. THE REQUIRED STORM RUNOFF DETENTION WILL BE PROVIDED BY CONSTRUCTING DRAINAGE SWALES ALONG THE REAR OF THE LOTS AND INSTALLING A DRAINAGE PIPE SYSTEM WITH STREET CURB INLETS AND GRATED STORM INLETS TO DISCHARGE THE WATER FROM THE SWALES. THE STORM DRAINAGE PIPE SYSTEM WILL BE PROVIDED WITH ONE DISCHARGE OUTFALL INTO THIS EXISTING DITCH. NO OTHER DRAINAGE IMPROVEMENTS ARE PROPOSED AT THIS TIME. HOWEVER, SHOULD THE INTENDED USE OF THE LAND CHANGE, A REVISED DRAINAGE PLAN SHOULD BE PREPARED

CALCULATIONS:
FEMA FLOOD ZONE "X" & "A" COMMUNITY-PANEL NO. 480334 0325 D EFFECTIVE DATE: MAY 17, 2001 REVISED TO REFLECT LOMR MAY 17, 2001. SOIL HYDRAULIC GROUP IS D. EXISTING STORM RUNOFF BASED ON THE RATIONAL METHOD FOR A 10 YEAR FREQUENCY STORM IS 15.16 CFS. POST DEVELOPMENT EXPECTED RUNOFF IS 29.59 CFS FOR THE SAME DESIGN STORM.TOTAL DETENTION REQUIREMENT IS 78888 CF.

BY MY SIGNATURE BELOW, I CERTIFY THAT THIS SUBDIVISION LIES IN A
ZONE "X" AREAS DETERMINED TO BE OUTSIDE 500-YEAR FLOOD PLAIN
ZONE "A" NO BASE FLOOD ELEVATIONS DETERMINED.
COMMUNITY-PANEL NO. 480334 0325 D MAP REVISED ON JUNE 6, 2000, REVISED TO REFLECT LOMR MAY 17, 2001. ZONE "A" HAS BEEN REVISED TO FLOOD **ZONE "X"** UNDER CASE NUMBER 01-06-555A LOMR-F

PREPARED BY: ARTEMIO GAYTAN, P.E. DATE

LEGEND:

× 201.00 ORIGINAL NATURAL GROUND ELEVATIONS

× 201.00 FINISH GRADE ELEVATION (LOMR-F)

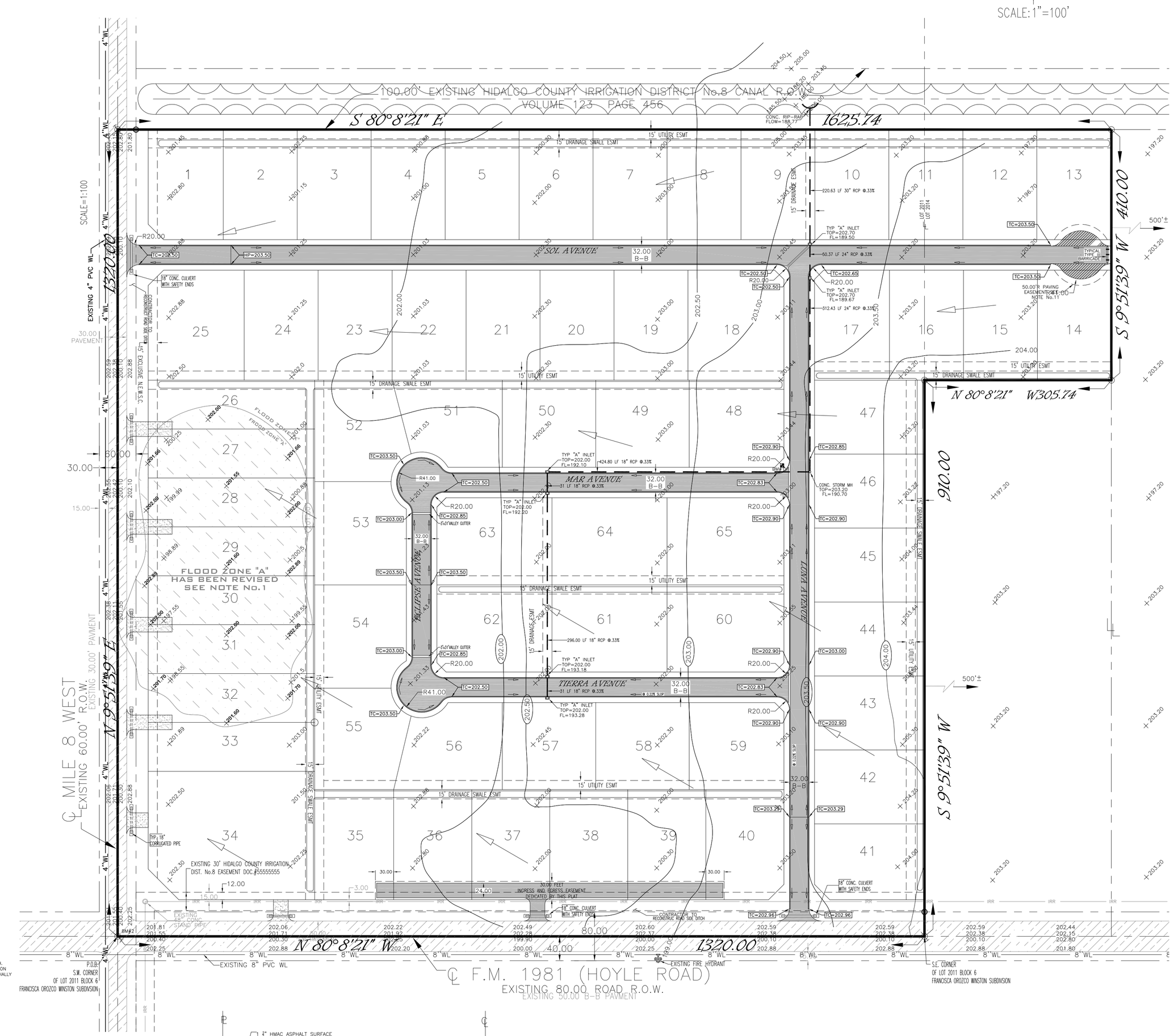

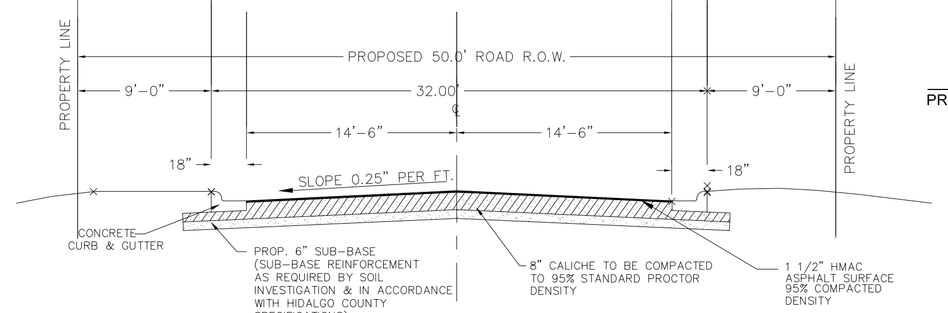

TYPICAL STREET SECTION DETAIL
N.T.S

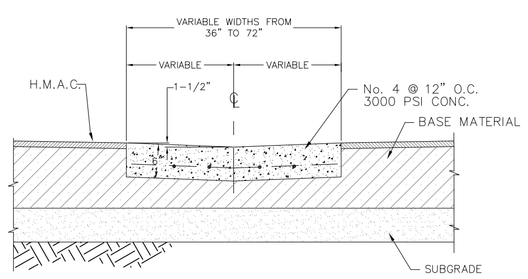

TYPICAL VALLEY GUTTER SECTION
N.T.S

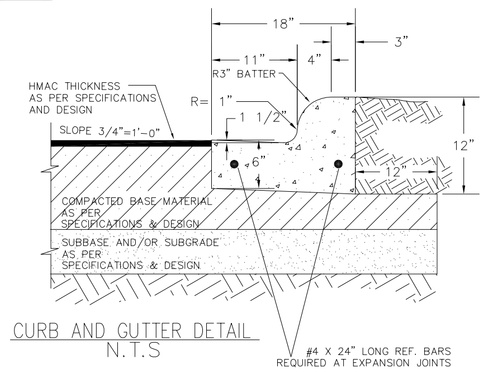

CURB AND GUTTER DETAIL
N.T.S

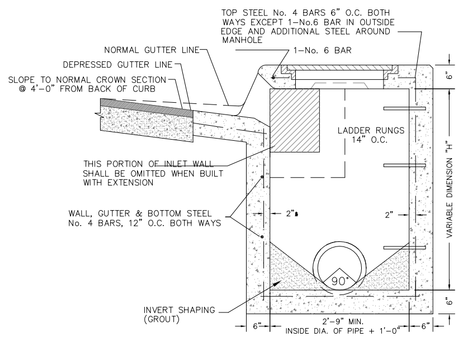

DRAINAGE MANHOLE DETAILS
N.T.S

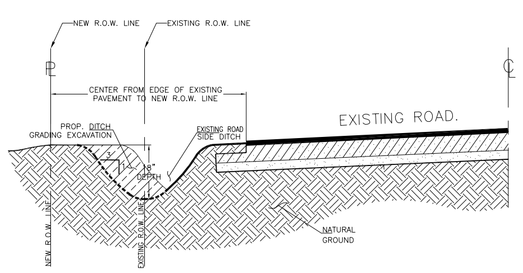

RECONSTRUCTION OF ROAD SIDE DITCH
N.T.S

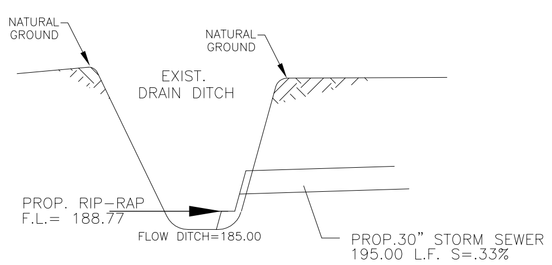

EXIST. DRAIN DITCH CROSS SECTION
NOT TO SCALE

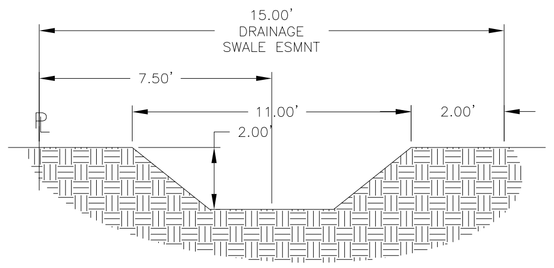

DRAINAGE SWALE X-SECTION
N.T.S

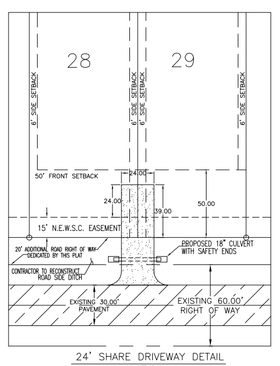

24' SHARE DRIVEWAY DETAIL
N.T.S.

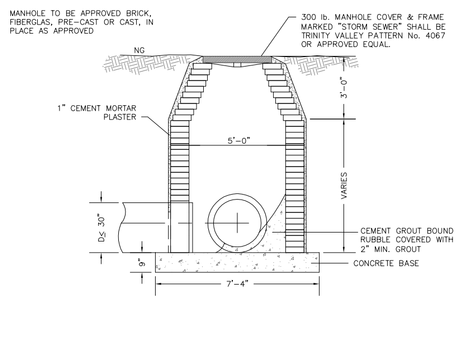

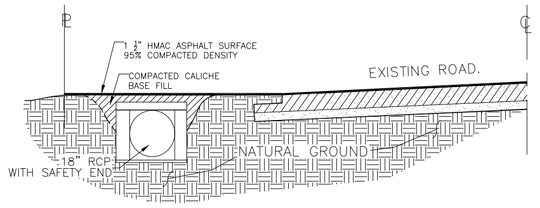

CROSS SECTION DETAIL OF SHARED DRIVEWAY WITH CULVERT AND SAFETY END
N.T.S.

	NAME	ADDRESS	PHONE NUMBER / FAX NUMBER
OWNERS:	JACINTO DEL BOSQUE	2801 LA SOLEDAD ST. CALEXICO TX 78587	956-968-0418 / 956-969-1804
ENGINEER:	ARTEMIO GAYTAN	5878 JADE AVENUE WESLACO TX 78596	956-555-5558 / 956-555-5578
SURVEYOR:	CALIXTRO BENBENUTI	5878 JADE AVENUE WESLACO TX 78596	956-555-5558 / 956-555-5578

NO.	SHEET	REVISION	DATE	APPROVED

Hidalgo Engineering Group
ENGINEERING~SURVEYORS~PLANNERS~CONSTRUCTION MANAGER
5878 JADEN AVENUE WESLACO TEXAS 78596
OFFICE: 956-555-5558 ★ FAX:956-555-5578

INDEX TO SHEET GEO ACRES No.2 SUBDIVISION

1	LOCATION MAP AND ETJ; PRINCIPAL CONTACTS; PLAT WITH LOTS, STREETS, AND EASEMENT DESIGNATIONS; LEGAL DESCRIPTION (METES AND BOUNDS); SURVEYOR'S AND ENGINEER'S CERTIFICATION; PLAT NOTES AND RESTRICTIONS; OWNER'S DEDICATION, CERTIFICATION, AND ATTESTATION; CITY APPROVAL CERTIFICATE; COUNTY CLERK'S RECORDING CERTIFICATE; HIDALGO COUNTY CERTIFICATE OF PLAT APPROVAL; DESCRIPTION OF LOCATION OF SUBDIVISION WITH RESPECT TO THE ETJ OF A MUNICIPALITY AND DESIGNATE THE PRECINCT THE PROJECT IS SITUATED; H.C.D.D. CERTIFICATION; IRRIGATION DISTRICT CERTIFICATE OF APPROVAL; RIGHT OF WAY CERTIFICATION; HCHD CERTIFICATION: REVISION NOTES.
2	WATER DISTRIBUTION AND SANITARY SEWER (OSSF) MAP, ENGINEERING REPORT (ENGLISH AND SPANISH VERSION), INCLUDING DESCRIPTION OF WATER AND WASTE WATER (OSSF) AND ENGINEER'S CERTIFICATION (ENGLISH AND SPANISH VERSION); SAMPLE OF LOG BORE FOR OSSF SYSTEM. TYPICAL WATER SERVICE CONNECTION; SUBDIVIDER CERTIFICATE AND STATEMENT.
3	DRAINAGE REPORT INCLUDING DESCRIPTION OF DRAINAGE AND HOW IT WILL SERVE THIS DEVELOPMENT;MAP OF TOPOGRAPHY AND DRAINAGE, AND ENGINEER'S CERTIFICATION; REVISION NOTES; TYPICAL ROADWAY SECTION;CURB AND GUTTER SECTION VALLEY GUTTER SECTION.