9070 HARMONY DRIVE | FOR LEASE

9070 HARMONY DRIVE, MIDWEST CITY, OK 73130

VICKI KNOTTS
vknotts@newmarkrp.com
O: 405.879.4761 C: 405.226.3916

NEWMARK
ROBINSON PARK

9070 HARMONY DRIVE / FOR LEASE

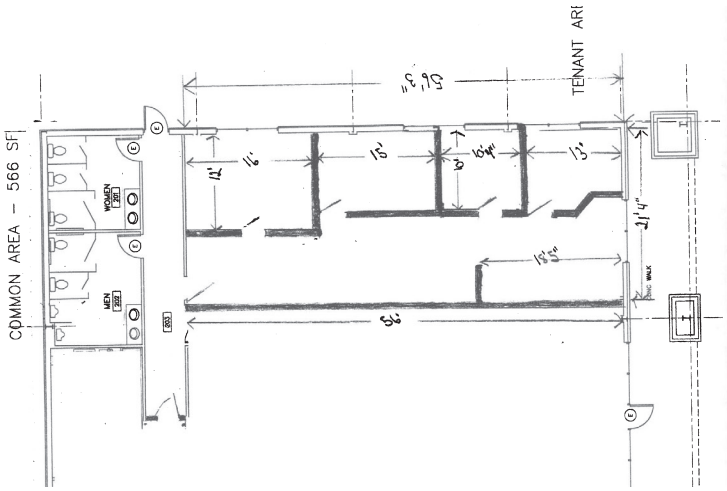

PROPERTY OVERVIEW

This office space offers a prime opportunity for businesses seeking a prime location in the heart of Midwest City, Oklahoma. With a total of 1,398 square feet, this property provides ample space to accommodate various professional endeavors. Free rent is available for qualified tenants, adding even more value to this exceptional opportunity.

DETAILS

Available SF	1,398 SF
Lease Rate	$15/SF
Suite	C
Market	Oklahoma City
Submarket	Midwest City

HIGHLIGHTS

- Close proximity to major roads
- Easy accessability
- Located close to restaurants, shopping, and other commercial establishments.

NEWMARK ROBINSON PARK

211 N. Robinson, Ste N-600 OKC, OK, 73102
110 W. 7th, Ste 2710 Tulsa, OK, 74119

for more information, visit us at
NEWMARKRP.COM

The information contained herein was obtained from sources believed reliable; however, Newmark Robinson Park makes no guarantees, warranties or representations as to the completeness or accuracy thereof. The presentation of this property is submitted subject to errors, omissions, change of price or conditions prior to sale or lease, or withdrawal without notice. Independently Owned and Operated.