LEGEND

BSW
LEW
REW
FSW

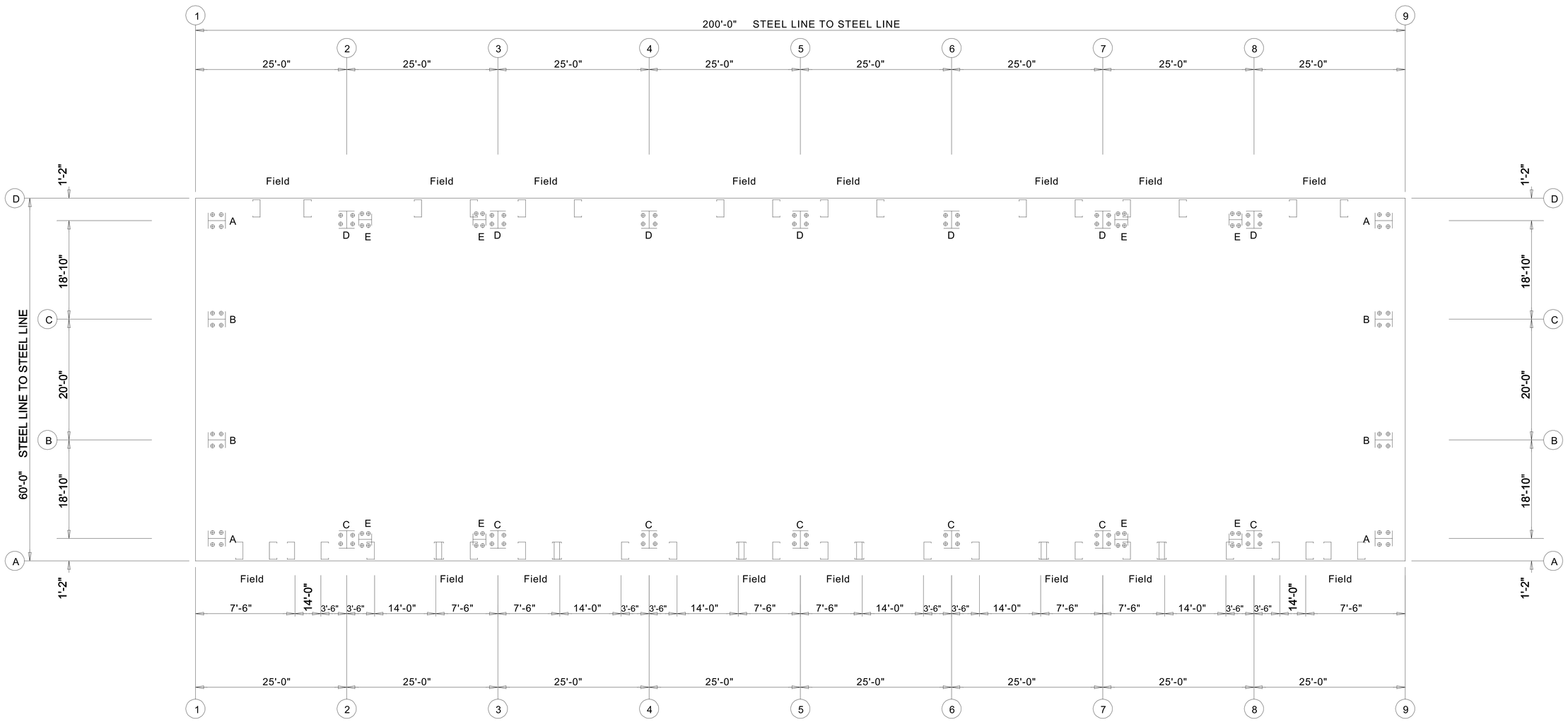

ANCHOR BOLT PLAN

NOTE: All Base Plates @ 100'-0" (U.N.)

Reference Elevation @ 100'-0"

DRAWING IS NOT TO SCALE

Jayson Beechinor

60'-0" x 200'-0" x 18'-0"

DATE: 4/29/25 REVISION: 0

ENG: DWN: APPD:

F.O.47528-2-1

REVISION HISTORY

REV.	DESCRIPTION	DATE

Jayson Beechinor

DRAWING STATUS

THESE DRAWINGS HAVE BEEN GENERATED FOR VISUALIZATION PURPOSES ONLY. THEY ARE PRELIMINARY AND SHOULD NOT BE CONSIDERED FINAL. FINAL DRAWINGS WILL BE ISSUED ONLY AFTER AN ORDER HAS BEEN PLACED AND DESIGNATED "FOR FABRICATION".

PAGE OF

FRAME LINES: 2 3 4 5 6 7 8

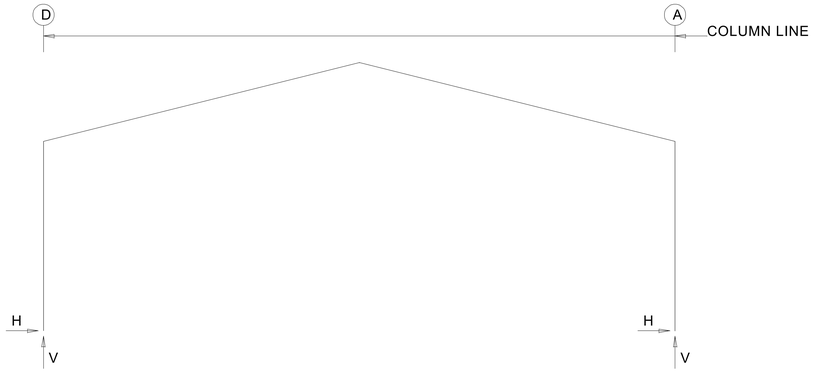

RIGID FRAME: ANCHOR BOLTS & BASE PLATES

Frm Line	Col Line	Anc._Bolt Qty	Anc._Bolt Dia	Base_Plate (in) Width	Base_Plate (in) Length	Thick	ARE/BRE (in)
2*	D	4	0.750	8.000	20.56	0.500	0.0
2*	A	4	0.750	8.000	17.63	0.500	0.0

2* Frame lines: 2 3 4 5 6 7 8

RIGID FRAME: BASIC COLUMN REACTIONS (k)

Frame Line	Column Line	-----Dead---- Horz	Vert	--Collateral- Horz	Vert	-----Live---- Horz	Vert	-----Snow---- Horz	Vert	--Wind_Left1- Horz	Vert	-Wind_Right1- Horz	Vert
2*	D	1.2	2.9	1.9	4.0	4.5	9.5	11.2	23.3	-8.7	-13.8	-0.1	-9.1
2*	A	-1.2	3.0	-1.9	4.0	-4.5	9.5	-11.2	23.2	0.1	-9.1	8.8	-13.8

Frame Line	Column Line	--Wind_Left2- Horz	Vert	-Wind_Right2- Horz	Vert	--Wind_Long1- Horz	Vert	--Wind_Long2- Horz	Vert	-Seismic_Left Horz	Vert	Seismic_Right Horz	Vert
2*	D	-8.4	-8.5	0.1	-3.8	-1.3	-13.1	-2.5	-11.5	-0.6	-0.3	0.6	0.3
2*	A	-0.1	-3.7	8.4	-8.4	2.5	-9.8	1.3	-11.4	-0.6	0.3	0.6	-0.3

Frame Line	Column Line	-Seismic_Long Horz	Vert	-MIN_SNOW-- Horz	Vert	F1UNB_SL_L- Horz	Vert	F1UNB_SL_R- Horz	Vert
2*	D	0.0	-1.5	7.5	15.5	9.2	22.4	9.3	12.9
2*	A	0.0	0.0	-7.5	15.5	-9.2	12.8	-9.3	22.3

2* Frame lines: 2 3 4 5 6 7 8

WIND BENT REACTIONS

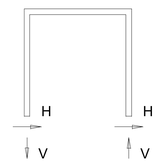

Wall Loc	Wall Line	Col Line	± Reactions Wind(k) Horz	Wind(k) Vert	Seismic(k) Horz	Seismic(k) Vert	Bolt(in) Qty	Bolt(in) Dia	Base_Plate(in) Width	Base_Plate(in) Length	Thick
F_SW	A	2	1.4	1.9	1.2	1.7	4	0.750	8.000	8.125	0.500
F_SW	A	3	1.4	1.9	1.2	1.7	4	0.750	8.000	8.125	0.500
F_SW	A	7	1.4	1.9	1.2	1.7	4	0.750	8.000	8.125	0.500
F_SW	A	8	1.4	1.9	1.2	1.7	4	0.750	8.000	8.125	0.500
B_SW	D	8	1.4	1.9	1.2	1.7	4	0.750	8.000	8.125	0.500
B_SW	D	7	1.4	1.9	1.2	1.7	4	0.750	8.000	8.125	0.500
B_SW	D	3	1.4	1.9	1.2	1.7	4	0.750	8.000	8.125	0.500
B_SW	D	2	1.4	1.9	1.2	1.7	4	0.750	8.000	8.125	0.500

Jayson Beechinor
60'-0" x 200'-0" x 18'-0"
DATE: 4/29/25 REVISION: 0
ENG: DWN: APPD:

F.O.47528-2-1

REVISION HISTORY

REV.	DESCRIPTION	DATE

Jayson Beechinor
DRAWING STATUS

THESE DRAWINGS HAVE BEEN GENERATED FOR VISUALIZATION PURPOSES ONLY. THEY ARE PRELIMINARY AND SHOULD NOT BE CONSIDERED FINAL. FINAL DRAWINGS WILL BE ISSUED ONLY AFTER AN ORDER HAS BEEN PLACED AND DESIGNATED "FOR FABRICATION".

PAGE OF

ENDWALL COLUMN: BASIC COLUMN REACTIONS (k)

Frm Line	Col Line	Dead Vert	Collat Vert	Live Vert	Snow Vert	Wind_Left1 Horz	Wind_Left1 Vert	Wind_Right1 Horz	Wind_Right1 Vert	Wind_Left2 Horz	Wind_Left2 Vert	Wind_Right2 Horz	Wind_Right2 Vert	Wind Press Horz
1	D	0.6	0.7	2.4	3.9	0.0	-2.7	0.0	-2.4	0.0	-1.7	0.0	-1.2	-1.5
1	C	1.2	1.6	5.7	9.2	-2.6	-9.1	0.0	-0.9	-2.3	-7.2	0.0	0.5	-3.6
1	B	1.2	1.6	5.7	9.2	0.0	-0.9	2.6	-9.1	0.0	0.5	2.3	-7.2	-3.6
1	A	0.6	0.7	2.4	3.9	0.0	-2.4	0.0	-2.7	0.0	-1.2	0.0	-1.7	-1.5

Frm Line	Col Line	Wind Suct Horz	Wind_Long1 Horz	Wind_Long1 Vert	Wind_Long2 Horz	Wind_Long2 Vert	Seis_Left Horz	Seis_Left Vert	Seis_Right Horz	Seis_Right Vert	Seis Long Vert	-MIN_SNOW-- Horz	-MIN_SNOW-- Vert
1	D	1.7	0.0	-3.0	0.0	-1.9	0.0	0.0	0.0	0.0	0.0	0.0	2.6
1	C	4.0	0.0	-4.7	-0.9	-4.3	-0.8	-0.9	0.0	0.8	0.0	0.0	6.1
1	B	4.0	0.9	-4.3	0.0	-4.7	0.0	0.8	0.8	-0.9	0.0	0.0	6.1
1	A	1.7	0.0	-1.9	0.0	-3.0	0.0	0.0	0.0	0.0	0.0	0.0	2.6

Frm Line	Col Line	E1UNB_SL_L- Horz	E1UNB_SL_L- Vert	E1UNB_SL_R- Horz	E1UNB_SL_R- Vert	E1PAT_LL_1- Horz	E1PAT_LL_1- Vert	E1PAT_LL_2- Horz	E1PAT_LL_2- Vert	E1PAT_LL_3- Horz	E1PAT_LL_3- Vert	E1PAT_LL_4- Horz	E1PAT_LL_4- Vert
1	D	0.0	3.7	0.0	1.0	0.0	2.1	0.0	-0.2	0.0	2.4	0.0	-0.3
1	C	0.0	11.3	0.0	3.8	0.0	6.2	0.0	2.4	0.0	2.8	0.0	2.9
1	B	0.0	3.8	0.0	11.3	0.0	2.4	0.0	6.2	0.0	2.8	0.0	2.9
1	A	0.0	1.0	0.0	3.7	0.0	-0.2	0.0	2.1	0.0	2.4	0.0	-0.3

Frm Line	Col Line	Dead Vert	Collat Vert	Live Vert	Snow Vert	Wind_Left1 Horz	Wind_Left1 Vert	Wind_Right1 Horz	Wind_Right1 Vert	Wind_Left2 Horz	Wind_Left2 Vert	Wind_Right2 Horz	Wind_Right2 Vert	Wind Press Horz
9	A	0.6	0.7	2.4	3.9	0.0	-2.7	0.0	-2.4	0.0	-1.7	0.0	-1.2	-1.5
9	B	1.2	1.6	5.7	9.2	-2.6	-9.1	0.0	-0.9	-2.3	-7.2	0.0	0.5	-3.6
9	C	1.2	1.6	5.7	9.2	0.0	-0.9	2.6	-9.1	0.0	0.5	2.3	-7.2	-3.6
9	D	0.6	0.7	2.4	3.9	0.0	-2.4	0.0	-2.7	0.0	-1.2	0.0	-1.7	-1.5

Frm Line	Col Line	Wind Suct Horz	Wind_Long1 Horz	Wind_Long1 Vert	Wind_Long2 Horz	Wind_Long2 Vert	Seis_Left Horz	Seis_Left Vert	Seis_Right Horz	Seis_Right Vert	Seis Long Vert	-MIN_SNOW-- Horz	-MIN_SNOW-- Vert
9	A	1.7	0.0	-3.0	0.0	-1.9	0.0	0.0	0.0	0.0	0.0	0.0	2.6
9	B	4.0	0.0	-4.7	-0.9	-4.3	-0.8	-0.9	0.0	0.8	0.0	0.0	6.1
9	C	4.0	0.9	-4.3	0.0	-4.7	0.0	0.8	0.8	-0.9	0.0	0.0	6.1
9	D	1.7	0.0	-1.9	0.0	-3.0	0.0	0.0	0.0	0.0	0.0	0.0	2.6

Frm Line	Col Line	E2UNB_SL_L- Horz	E2UNB_SL_L- Vert	E2UNB_SL_R- Horz	E2UNB_SL_R- Vert	E2PAT_LL_1- Horz	E2PAT_LL_1- Vert	E2PAT_LL_2- Horz	E2PAT_LL_2- Vert	E2PAT_LL_3- Horz	E2PAT_LL_3- Vert	E2PAT_LL_4- Horz	E2PAT_LL_4- Vert
9	A	0.0	3.7	0.0	1.0	0.0	2.1	0.0	-0.2	0.0	2.4	0.0	-0.3
9	B	0.0	11.3	0.0	3.8	0.0	6.2	0.0	2.4	0.0	2.8	0.0	2.9
9	C	0.0	3.8	0.0	11.3	0.0	2.4	0.0	6.2	0.0	2.8	0.0	2.9
9	D	0.0	1.0	0.0	3.7	0.0	-0.2	0.0	2.1	0.0	2.4	0.0	-0.3

ENDWALL COLUMN: ANCHOR BOLTS & BASE PLATES

Frm Line	Col Line	Anc. Qty	Bolt Dia	Base_Plate (in) Width	Base_Plate (in) Length	Base_Plate (in) Thick	ARE/BRE (in)
1	D	4	0.750	6.000	7.875	0.375	0.0
1	C	4	0.750	6.000	7.875	0.375	0.0
1	B	4	0.750	6.000	7.875	0.375	0.0
1	A	4	0.750	6.000	7.875	0.375	0.0
9	A	4	0.750	6.000	7.875	0.375	0.0
9	B	4	0.750	6.000	7.875	0.375	0.0
9	C	4	0.750	6.000	7.875	0.375	0.0
9	D	4	0.750	6.000	7.875	0.375	0.0

Reaction Type	Description
Dead	Dead Load
Collateral	Collateral Load
Live	Roof Live Load
Snow	Uniform Roof Snow Load
Wind_Left1	Transverse Wind From Left With Internal Pressure
Wind_Right1	Transverse Wind From Right With Internal Pressure
Wind_Left2	Transverse Wind From Left With Internal Suction
Wind_Right2	Transverse Wind From Right With Internal Suction
Wind_Long1	Longitudinal Wind From Left Endwall
Wind_Long2	Longitudinal Wind From Right Endwall
Wind_Press	Wind Pressure Applied Towards Endwall
Wind_Suct	Wind Suction Applied Away From Endwall
Seismic_Left	Seismic Load Applied From Left
Seismic_Right	Seismic Load Applied From Right
Seismic_Long	Seismic Load Applied Longitudinally
F# Unb_SL_L	Unbalanced Snow Load On Left
F# Unb_SL_R	Unbalanced Snow Load On Right
F# PAT_SL#	Pattern Snow Load
Drift	Snow Drift Load
Sliding	Sliding Snow Load
HorzOP	Horizontal Out Of Plane Load

ANCHOR BOLT SUMMARY

Qty	Locate	Dia (in)	Type
⊕ 32	Endwall	3/4"	
⊕ 56	Frame	3/4"	
⊕ 32	WindCol	3/4"	

BUILDING BRACING REACTIONS

Wall Loc	Wall Line	Col Line	Reactions in plane of wall ± Reactions(k) Wind Horz	Wind Vert	Seismic Horz	Seismic Vert	Panel_Shear (lb/ft) Wind	Seis	Note
L_EW	1	C,B	Bracing, see EW reactions						
F_SW	A	2,3							(a)
		7,8							(a)
R_EW	9	B,C	Bracing, see EW reactions						
B_SW	D	7,8							(a)
		2,3							(a)

(a)Wind bent in bay

Reactions for seismic represent shear force, Eh
Reaction values shown are unfactored

DESIGN INFORMATION
---

1. All loading conditions are examined and only the maximum / minimum H or V and the corresponding H or V are reported.

2. Positive reactions are shown in the sketch. Foundation loads are in opposite directions.

3. Bracing reactions are in the plane of the brace with the H pointing away from the braced bay. The vertical reaction is downward.

4. Building reactions are based on the following building data:

DESIGN CRITERIA

Width (ft)	= 60
Length (ft)	= 200
Eave Height (ft)	= 18
Roof Slope (rise/12)	= 3.0:12
Building Code	= IBC 21
Local Code (State/Prov)	= IBC 21
Dead Load (psf)	= 2.25
Collateral Load (psf)	= 5.00
Roof Live Load (psf)	= 20.00
Frame Live Load (psf)	= 12.00
Snow:	
Ground Snow Load (psf)	= 35.00
Snow Importance	= 1.00
Thermal Coefficient	= 1.00
Snow Exposure Factor	= 1.0000
Slippery Roof	= N
Roof Snow Load, Pf (psf)	= 30.00
Min Roof Snow Load, Pmin (psf)	= 20.00
Wind:	
Ultimate Wind Speed (mph)	= 116 mph
Risk Category	= II - Normal
Importance - Wind	= 1.00
Wind Exposure	= B
Enclosure Classification = C - Enclosed	
--Internal Pressure Coefficients--	
Pressure	= 0.18
Suction	= -0.18
----Components & Cladding----	
Design Pressure:	
Pressure (psf)	= 21.25
Suction (psf)	= -28.45

Equivalent Lateral Brace Force Procedure.

Steel systems not specifically detailed for seismic resistance.

SEISMIC CRITERIA

Seismic Importance	= 1.00
Risk Category	= II - Normal
Mapped Spectral Response Accelerations	
Ss	= 0.1840
S1	= 0.0540
---Spectral Response Coefficients---	
Sds	= 0.1963
Sd1	= 0.0864
Site Class	= d
Seismic Design Category	= B
------Base Shear------	
Expanded Formula	= 0.667*Ie*Sms*W/R
Longitudinal Base Shear	(k) = 9.61
Transverse Base Shear	(k) = 9.36
--Seismic Response Coefficients--	
Frame	= 0.066
FSW	= 0.066
BSW	= 0.066
--Response Modification Factors--	
Frame	= 3
FSW	= 3
BSW	= 3

DEFLECTION LIMITS

ENDWALL COLUMN
L / 120
ENDWALL RAFTER (Live)
L / 180
ENDWALL RAFTER (Wind)
L / 180
WALL GIRTS
L / 90
PURLIN (LIVE)
L / 150
PURLIN (WIND)
L / 150
WALL PANEL
L / 90
ROOF PANEL (Live)
L / 120
ROOF PANEL (Wind)
L / 120
Main Frame (Horiz)
H / 60
Main Frame (Vert)
L / 180
WIND BRACING
H / 60
Main Frame (Crane)
H / 100
Main Frame (Seismic)
H / 60
SEISMIC BRACING
H / 60
PARTITION COLUMN
L / 120
PARTITION GIRT
L / 90
PARTITION PANEL
L / 90

Jayson Beechinor
60'-0" x 200'-0" x 18'-0"
DATE: 4/29/25
REVISION: 0
ENG:
DWN:
APPD:

F.O.47528-2-1

REVISION HISTORY

REV.	DESCRIPTION	DATE

Jayson Beechinor
DRAWING STATUS

THESE DRAWINGS HAVE BEEN GENERATED FOR VISUALIZATION PURPOSES ONLY. THEY ARE PRELIMINARY AND SHOULD NOT BE CONSIDERED FINAL. FINAL DRAWINGS WILL BE ISSUED ONLY AFTER AN ORDER HAS BEEN PLACED AND DESIGNATED "FOR FABRICATION".

PAGE OF

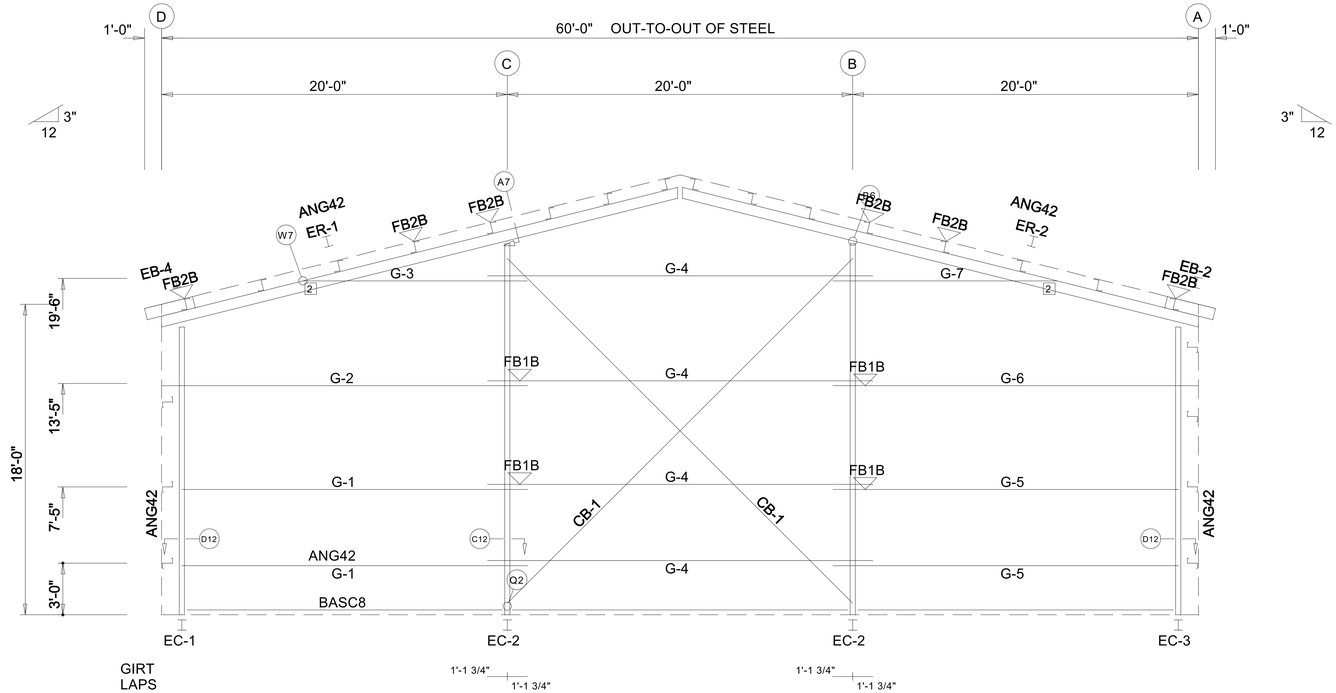

ENDWALL FRAMING: FRAME LINE 1

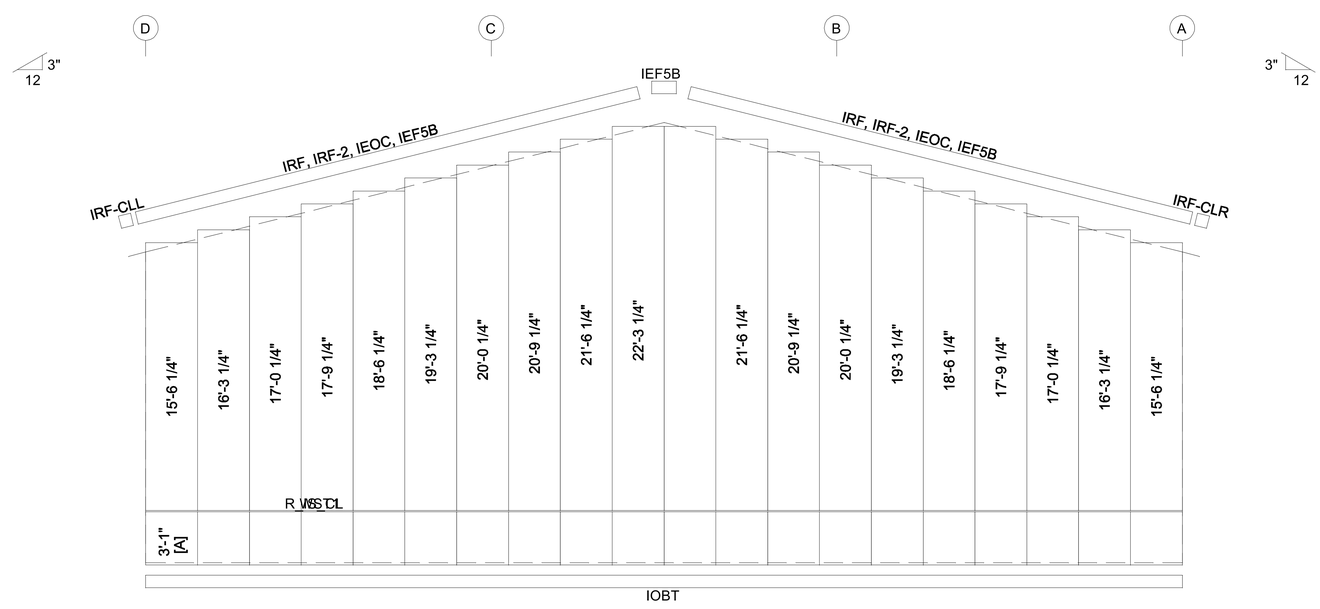

ENDWALL SHEETING & TRIM: FRAME LINE 1

PANELS: 26 Ga. R - TBD

[A] PANELS: 26 Ga. R - TBD

GENERAL NOTES:

1. Use TEK5WW screws in place of SD150 panel screws at all 10 gage members.
2. See detail C7A for field coping of coldform endwall column flange braces.
3. All connections to door or window jambs where the clip is not designated in the clip table / drawing are made with JC# clips (#= Girt Depth).

BOLT TABLE
FRAME LINE 1

LOCATION	QUAN	TYPE	DIA	LENGTH
ER-1/ER-2	8	A325	1/2"	1 1/2"
Columns/Raf	2	A325	3/4"	1 3/4"

MEMBER TABLE
FRAME LINE 1

QUAN	MARK	PART	LENGTH
1	EB-2	W8X10	2'-2 3/8"
1	EB-4	W8X10	2'-2 3/8"
1	EC-1	W8X10	16'-8 5/16"
2	EC-2	W8X10	21'-4 13/16"
1	EC-3	W8X10	16'-8 5/16"
1	ER-1	W10X12	30'-11 1/16"
1	ER-2	W10X12	30'-11 1/16"
2	G-1	08X25Z16	20'-5 1/2"
1	G-2	08X25Z16	21'-1 1/2"
1	G-3	08X25Z16	12'-4 3/4"
4	G-4	08X25Z16	22'-3 1/2"
2	G-5	08X25Z16	20'-5 1/2"
1	G-6	08X25Z16	21'-1 1/2"
1	G-7	08X25Z16	12'-4 3/4"
2	CB-1	CABLE500	25'-10"

CONNECTION PLATES
FRAME LINE 1

ID	QUAN	MARK/PART
2	2	GR08N03B

FLANGE BRACE TABLE
FRAME LINE 1

ID	MARK	LENGTH
1	FB2B	1'-3 5/8"
2	FB1B	1'-2 3/8"

DRAWING IS NOT TO SCALE

TRIM COLORS

EAVE TRIM	= TBD	CORNER TRIM	= TBD
BASE TRIM	= TBD	GUTTER	= TBD
DOOR TRIM	= TBD	DOWNSPOUTS	= TBD
RAKE TRIM	= TBD		

* LINER TRIM = Liner panel color

* SOFFIT TRIM = Soffit panel color

* ONLY APPLICABLE IF LINER TRIM OR SOFFIT PANEL IS INDICATED ON BUILDING ORDER.

Jayson Beechinor
60'-0" x 200'-0" x 18'-0"
DATE: 4/29/25
REVISION: 0
ENG:
DWN:
APPD:

F.O.47528-2-1

REVISION HISTORY

REV.	DESCRIPTION	DATE

Jayson Beechinor
DRAWING STATUS

THESE DRAWINGS HAVE BEEN GENERATED FOR VISUALIZATION PURPOSES ONLY. THEY ARE PRELIMINARY AND SHOULD NOT BE CONSIDERED FINAL. FINAL DRAWINGS WILL BE ISSUED ONLY AFTER AN ORDER HAS BEEN PLACED AND DESIGNATED "FOR FABRICATION".

PAGE OF

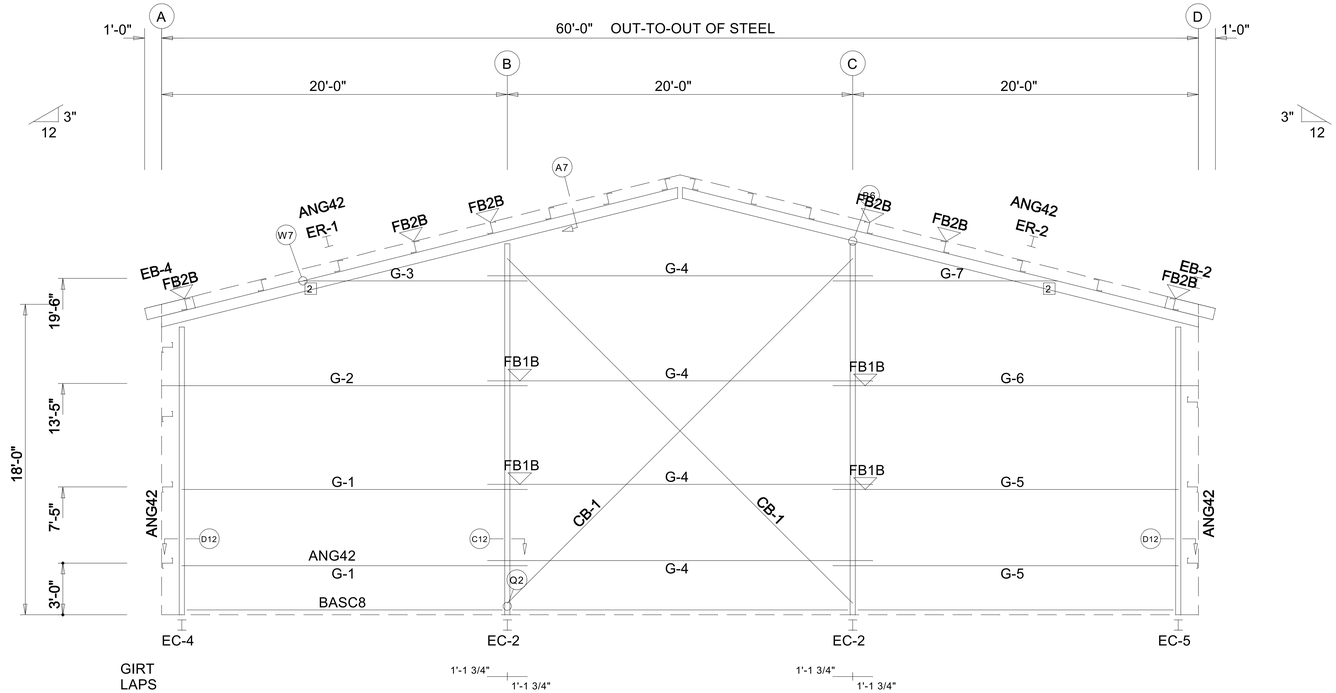

ENDWALL FRAMING: FRAME LINE 9

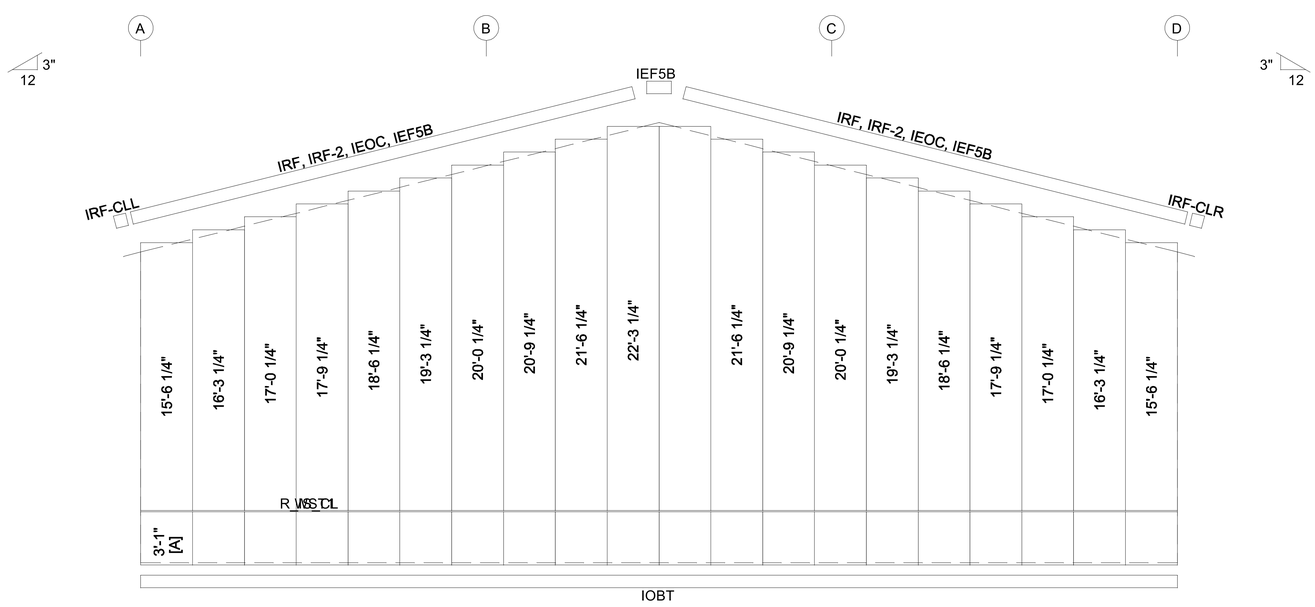

ENDWALL SHEETING & TRIM: FRAME LINE 9

PANELS: 26 Ga. R - TBD

[A] PANELS: 26 Ga. R - TBD

GENERAL NOTES:

1. Use TEK5WW screws in place of SD150 panel screws at all 10 gage members.
2. See detail C7A for field coping of coldform endwall column flange braces.
3. All connections to door or window jambs where the clip is not designated in the clip table / drawing are made with JC# clips (#= Girt Depth).

BOLT TABLE
FRAME LINE 9

LOCATION	QUAN	TYPE	DIA	LENGTH
ER-1/ER-2	8	A325	1/2"	1 1/2"
Columns/Raf	2	A325	3/4"	1 3/4"

MEMBER TABLE
FRAME LINE 9

QUAN	MARK	PART	LENGTH
1	EB-2	W8X10	2'-2 3/8"
1	EB-4	W8X10	2'-2 3/8"
2	EC-2	W8X10	21'-4 13/16"
1	EC-4	W8X10	16'-8 5/16"
1	EC-5	W8X10	16'-8 5/16"
1	ER-1	W10X12	30'-11 1/16"
1	ER-2	W10X12	30'-11 1/16"
2	G-1	08X25Z16	20'-5 1/2"
1	G-2	08X25Z16	21'-1 1/2"
1	G-3	08X25Z16	12'-4 3/4"
4	G-4	08X25Z16	22'-3 1/2"
2	G-5	08X25Z16	20'-5 1/2"
1	G-6	08X25Z16	21'-1 1/2"
1	G-7	08X25Z16	12'-4 3/4"
2	CB-1	CABLE500	25'-10"

CONNECTION PLATES
FRAME LINE 9

□ ID	QUAN	MARK/PART
2	2	GR08N03B

FLANGE BRACE TABLE
FRAME LINE 9

▽ ID	MARK	LENGTH
1	FB2B	1'-3 5/8"
2	FB1B	1'-2 3/8"

DRAWING IS NOT TO SCALE

TRIM COLORS

EAVE TRIM	= TBD	CORNER TRIM	= TBD
BASE TRIM	= TBD	GUTTER	= TBD
DOOR TRIM	= TBD	DOWNSPOUTS	= TBD
RAKE TRIM	= TBD		

* LINER TRIM = Liner panel color

* SOFFIT TRIM = Soffit panel color

* ONLY APPLICABLE IF LINER TRIM OR SOFFIT PANEL IS INDICATED ON BUILDING ORDER.

Jayson Beechinor
60'-0" x 200'-0" x 18'-0"
DATE: 4/29/25
REVISION: 0
ENG:
DWN:
APPD:

F.O.47528-2-1

REVISION HISTORY

REV.	DESCRIPTION	DATE

Jayson Beechinor
DRAWING STATUS

THESE DRAWINGS HAVE BEEN GENERATED FOR VISUALIZATION PURPOSES ONLY. THEY ARE PRELIMINARY AND SHOULD NOT BE CONSIDERED FINAL. FINAL DRAWINGS WILL BE ISSUED ONLY AFTER AN ORDER HAS BEEN PLACED AND DESIGNATED "FOR FABRICATION".

PAGE OF

SPLICE BOLT TABLE

Mark	Qty Top	Bot	Int	Type	Dia	Length
SP-1	4	4	2	A325	1.000	2.75
SP-2	4	4	2	A325	0.500	1.75

FLANGE BRACES: Both Sides(U.N.)
FBxxA(1)
A - L15X1/8
B - L20X1/4

MEMBER TABLE

Mark	Web Depth Start/End	Web Plate Thick	Web Plate Length	Outside Flange W x Thk x Length	Inside Flange W x Thk x Length
RF1-1	20.0/31.7	0.149	155.6	6 x 1/4" x 208.9	6 x 5/16" x 120.3
	31.7/34.0	0.219	60.0	6 x 5/16" x 35.8	6 x 3/8" x 66.3
RF1-2	26.0/18.6	0.149	270.0	6 x 5/16" x 93.2	6 x 1/2" x 93.2
	18.6/17.0	0.149	63.2	6 x 1/4" x 240.0	6 x 1/4" x 235.8
RF1-3	17.0/18.4	0.149	62.9	6 x 1/4" x 240.0	6 x 1/4" x 235.8
	18.4/25.0	0.149	270.0	6 x 5/16" x 92.9	6 x 1/2" x 92.9
RF1-4	34.0/31.1	0.219	60.0	6 x 5/16" x 36.1	8 x 1/2" x 67.5
	31.1/17.0	0.149	155.7	8 x 1/4" x 208.9	8 x 3/8" x 120.5
EB-3	W8X10				

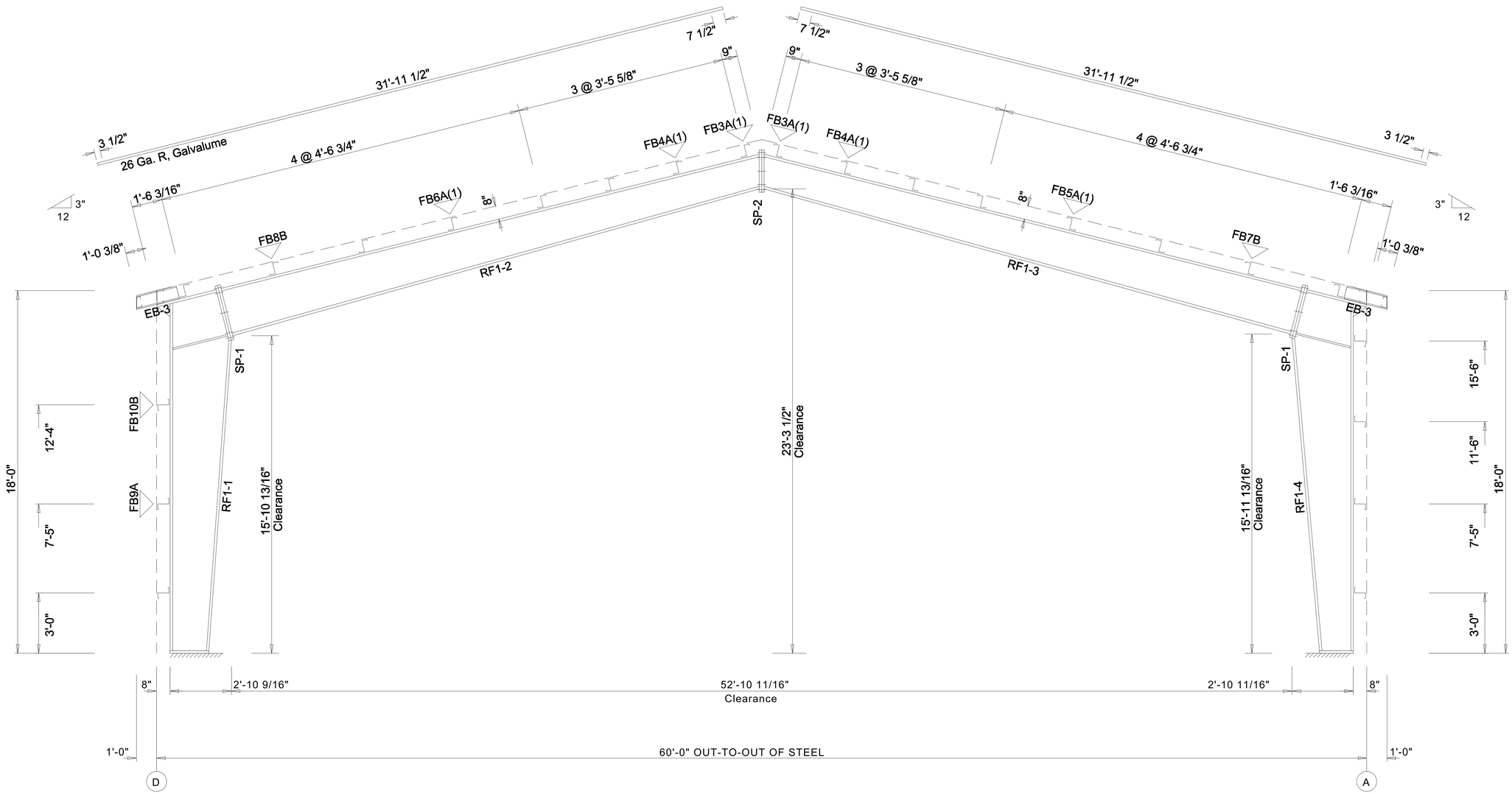

BUILDING CROSS SECTION: FRAME LINE 2 3 4 5 6 7 8

GENERAL NOTES:

1. See Detail Sheets for Connection Information.
2. See Shipping List for Flange Brace Lengths.

Jayson Beechinor
60'-0" x 200'-0" x 18'-0"
DATE: 4/29/25 REVISION: 0
ENG: DWN: APPD:

F.O.47528-2-1

REVISION HISTORY

REV.	DESCRIPTION	DATE

Jayson Beechinor
DRAWING STATUS

THESE DRAWINGS HAVE BEEN GENERATED FOR VISUALIZATION PURPOSES ONLY. THEY ARE PRELIMINARY AND SHOULD NOT BE CONSIDERED FINAL. FINAL DRAWINGS WILL BE ISSUED ONLY AFTER AN ORDER HAS BEEN PLACED AND DESIGNATED "FOR FABRICATION".

EXTENSION/CANOPY BOLTS ROOF PLAN				
MARK	QUAN	TYPE	DIA	LENGTH
EB-2	4	A325	1/2"	1 1/4"
EB-3	4	A325	1/2"	1 1/4"
EB-4	4	A325	1/2"	1 1/4"

MEMBER TABLE ROOF PLAN			
QUAN	MARK	PART	LENGTH
4	EB-1	08X3OC16	7'-7 5/16"
2	EB-2	W8X10	2'-2 3/8"
14	EB-3	W8X10	2'-2 3/8"
2	EB-4	W8X10	2'-2 3/8"
16	P-1	08X25Z12	29'-1 1/2"
32	P-2	08X25Z13	31'-3 1/2"
64	P-3	08X25Z14	31'-3 1/2"
16	P-4	08X25Z12	29'-1 1/2"
4	E-1	8X35E10	23'-5 1/2"
24	E-2	8X35E10	24'-5 1/2"
2	E-3	8X35E10	25'-8 1/2"
2	E-4	8X35E10	25'-8 1/2"
4	E-5	8X35E10	1'-8 1/2"
8	CB-2	CABLE500	28'-5 7/16"
8	CB-3	CABLE500	24'-6 13/16"

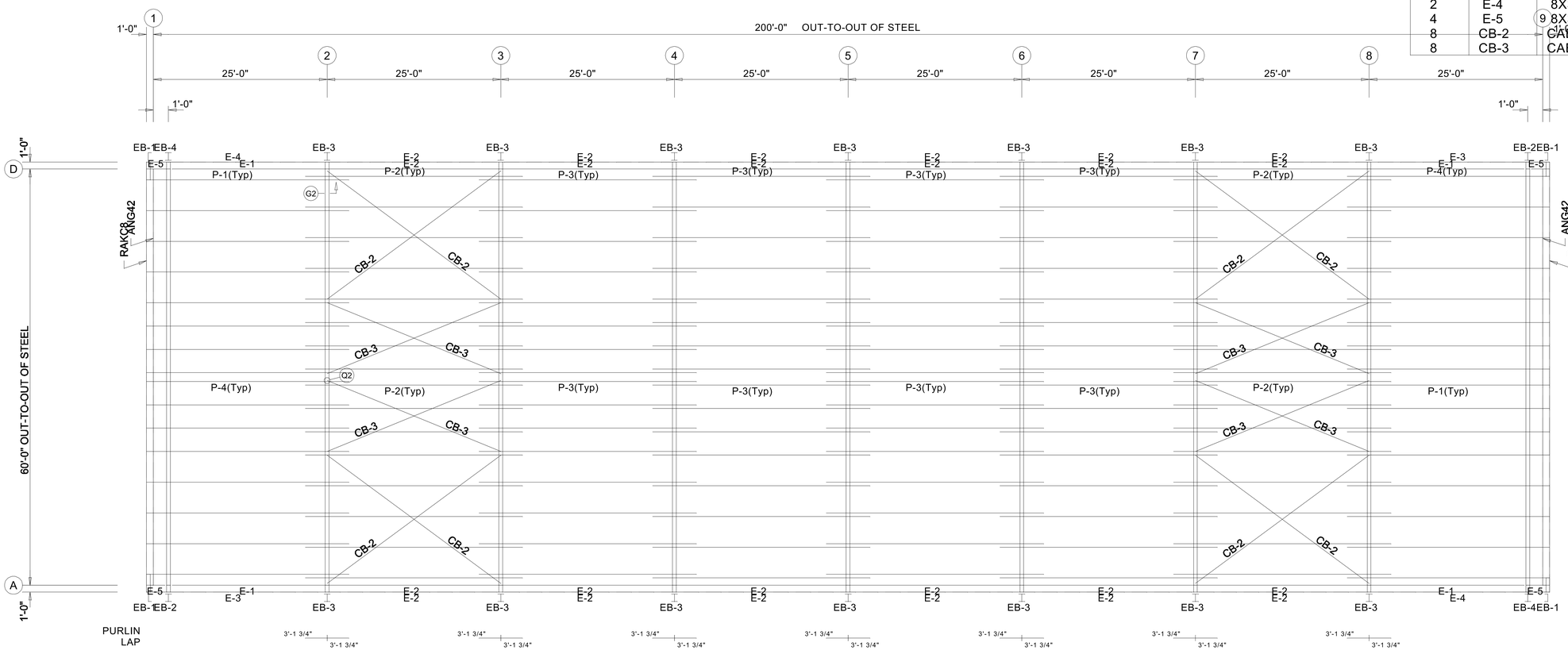

ROOF FRAMING PLAN

GENERAL NOTES:

1. Screw Down Roof: Use TEK5WW screws in place of SD150 panel screws at all 10 gage purlins, eave struts, or roof joists.
2. Standing Seam Roof: Use FST#6 in place of FST#1 clip to purlin screws at all 10 gage purlins, eave struts, or at roof joists.

DRAWING IS NOT TO SCALE

Jayson Beechinor

60'-0" x 200'-0" x 18'-0"

DATE: 4/29/25 REVISION: 0

ENG: DWN: APPD:

F.O.47528-2-1

REVISION HISTORY

REV.	DESCRIPTION	DATE

Jayson Beechinor

DRAWING STATUS

THESE DRAWINGS HAVE BEEN GENERATED FOR VISUALIZATION PURPOSES ONLY. THEY ARE PRELIMINARY AND SHOULD NOT BE CONSIDERED FINAL. FINAL DRAWINGS WILL BE ISSUED ONLY AFTER AN ORDER HAS BEEN PLACED AND DESIGNATED "FOR FABRICATION".

PAGE OF

BOLT TABLE FRAME LINE D				
LOCATION	QUAN	TYPE	DIA	LENGTH
WF-1 - WF-2	8	A325	3/4"	2 3/4"
WF-1 - RF1-1	8	A325	3/4"	1 3/4"

MEMBER TABLE FRAME LINE D			
QUAN	MARK	PART	LENGTH
4	WF-1	W8X18	16'-10"
2	WF-2	W8X24	22'-2"
16	DJ-3	08X35C16	12'-3 3/4"
8	DH-1	08X35C16	3'-4"
2	G-16	08X25Z16	26'-1 1/2"
1	G-17	08X25Z13	26'-1 1/2"
16	G-18	08X25Z16	27'-3 1/2"
2	G-19	08X25Z14	27'-3 1/2"
2	G-20	08X25Z16	26'-1 1/2"
1	G-21	08X25Z13	26'-1 1/2"

CONNECTION PLATES FRAME LINE D		
☐ID	QUAN	MARK/PART
5	4	PFS2

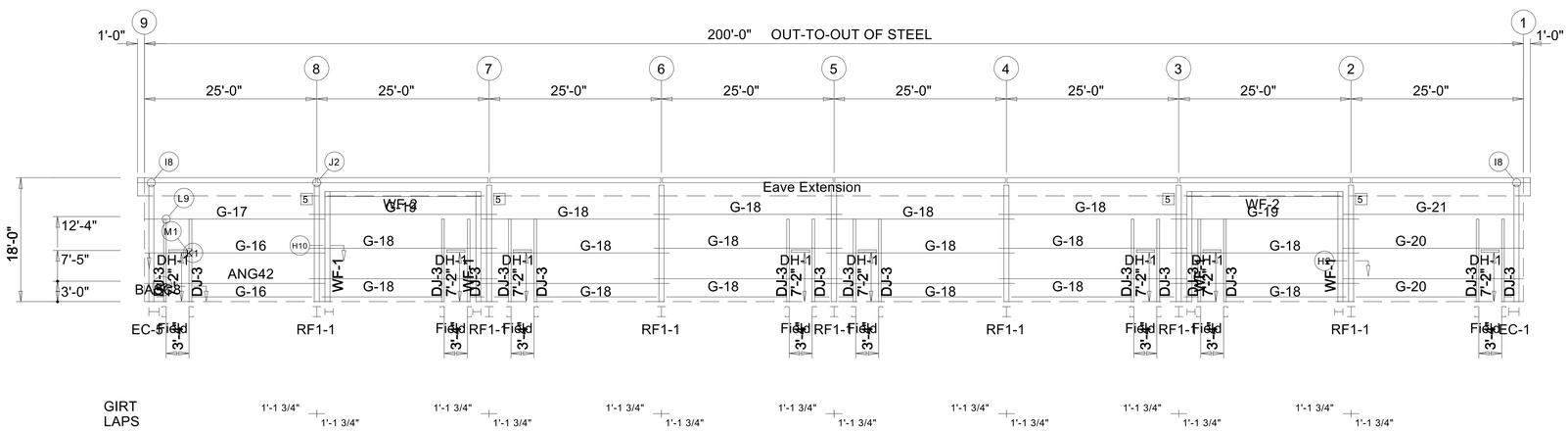

SIDEWALL FRAMING: FRAME LINE D

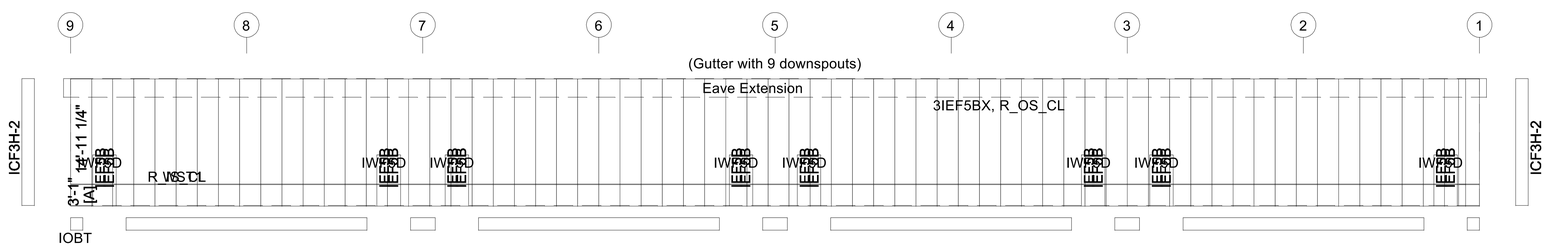

SIDEWALL SHEETING & TRIM: FRAME LINE D

PANELS: 26 Ga. R - TBD

[A] PANELS: 26 Ga. R - TBD

DRAWING IS NOT TO SCALE

TRIM COLORS			
EAVE TRIM	= TBD	CORNER TRIM	= TBD
BASE TRIM	= TBD	GUTTER	= TBD
DOOR TRIM	= TBD	DOWNSPOUTS	= TBD
RAKE TRIM	= TBD		

* LINER TRIM = Liner panel color

* SOFFIT TRIM = Soffit panel color

* ONLY APPLICABLE IF LINER TRIM OR SOFFIT PANEL IS INDICATED ON BUILDING ORDER.

GENERAL NOTES:

1. Use TEK5WW screws in place of SD150 panel screws at all 10 gage members.
2. All connections to door or window jambs where the clip is not designated in the clip table / drawing are made with JC# clips (#= Girt Depth).

Jayson Beechinor

60'-0" x 200'-0" x 18'-0"

DATE: 4/29/25 REVISION: 0

ENG: DWN: APPD:

F.O.47528-2-1

REVISION HISTORY

REV.	DESCRIPTION	DATE

Jayson Beechinor

DRAWING STATUS

THESE DRAWINGS HAVE BEEN GENERATED FOR VISUALIZATION PURPOSES ONLY. THEY ARE PRELIMINARY AND SHOULD NOT BE CONSIDERED FINAL. FINAL DRAWINGS WILL BE ISSUED ONLY AFTER AN ORDER HAS BEEN PLACED AND DESIGNATED "FOR FABRICATION".

PAGE OF

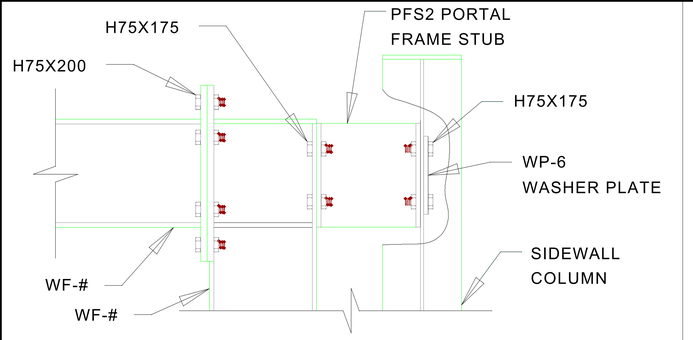

PORTAL FRAME CONNECTION WITH PFS2 STUB

BOLT TABLE
FRAME LINE A

LOCATION	QUAN	TYPE	DIA	LENGTH
WF-1 - WF-2	8	A325	3/4"	2 3/4"
WF-1 - RF1-4	8	A325	3/4"	1 3/4"

MEMBER TABLE
FRAME LINE A

QUAN	MARK	PART	LENGTH
4	WF-1	W8X18	16'-10"
2	WF-2	W8X24	22'-2"
16	DJ-1	08X35C16	11'-5 3/4"
16	DJ-2	08X35C16	15'-5 3/4"
8	DH-1	08X35C16	3'-4"
8	DH-2	08X35C16	14'-0"
3	G-8	08X25Z16	7'-2"
1	G-9	08X25Z13	26'-1 1/2"
12	G-10	08X25Z16	6'-4 1/2"
6	G-11	08X25Z16	27'-3 1/2"
9	G-12	08X25Z16	8'-4"
9	G-13	08X25Z16	8'-4"
1	G-14	08X25Z13	26'-1 1/2"
3	G-15	08X25Z16	7'-2"
16	JB-1	08X35C16	1'-8 3/4"

CONNECTION PLATES
FRAME LINE A

ID	QUAN	MARK/PART
3	8	e1
4	8	e2
5	4	PFS2

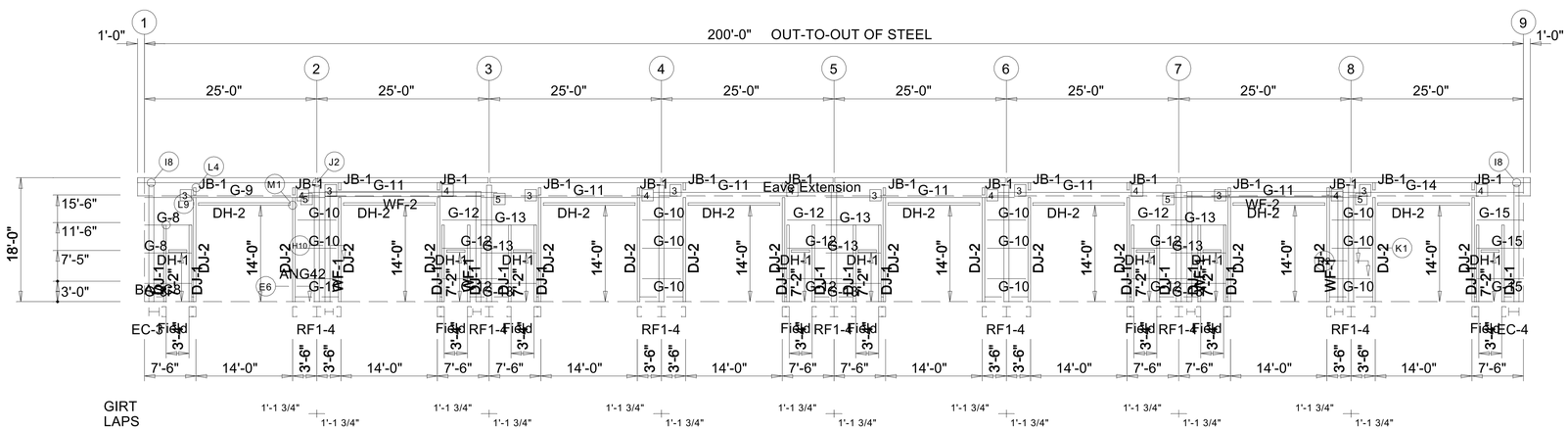

SIDEWALL FRAMING: FRAME LINE A

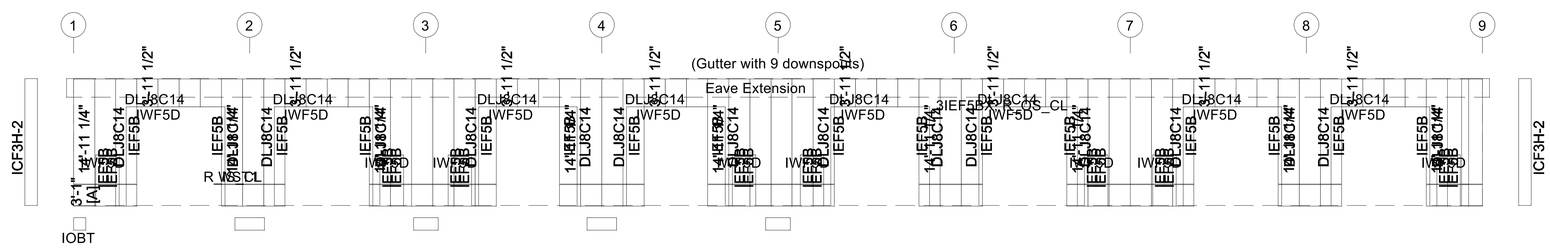

SIDEWALL SHEETING & TRIM: FRAME LINE A

PANELS: 26 Ga. R - TBD

[A] PANELS: 26 Ga. R - TBD

DRAWING IS NOT TO SCALE

TRIM COLORS

EAVE TRIM	= TBD	CORNER TRIM	= TBD
BASE TRIM	= TBD	GUTTER	= TBD
DOOR TRIM	= TBD	DOWNSPOUTS	= TBD
RAKE TRIM	= TBD		

* LINER TRIM = Liner panel color

* SOFFIT TRIM = Soffit panel color

* ONLY APPLICABLE IF LINER TRIM OR SOFFIT PANEL IS INDICATED ON BUILDING ORDER.

GENERAL NOTES:

1. Use TEK5WW screws in place of SD150 panel screws at all 10 gage members.
2. All connections to door or window jambs where the clip is not designated in the clip table / drawing are made with JC# clips (#= Girt Depth).

Jayson Beechinor

60'-0" x 200'-0" x 18'-0"

DATE: 4/29/25 REVISION: 0

ENG: DWN: APPD:

F.O.47528-2-1

REVISION HISTORY

REV.	DESCRIPTION	DATE

Jayson Beechinor

DRAWING STATUS

THESE DRAWINGS HAVE BEEN GENERATED FOR VISUALIZATION PURPOSES ONLY. THEY ARE PRELIMINARY AND SHOULD NOT BE CONSIDERED FINAL. FINAL DRAWINGS WILL BE ISSUED ONLY AFTER AN ORDER HAS BEEN PLACED AND DESIGNATED "FOR FABRICATION".

PAGE OF

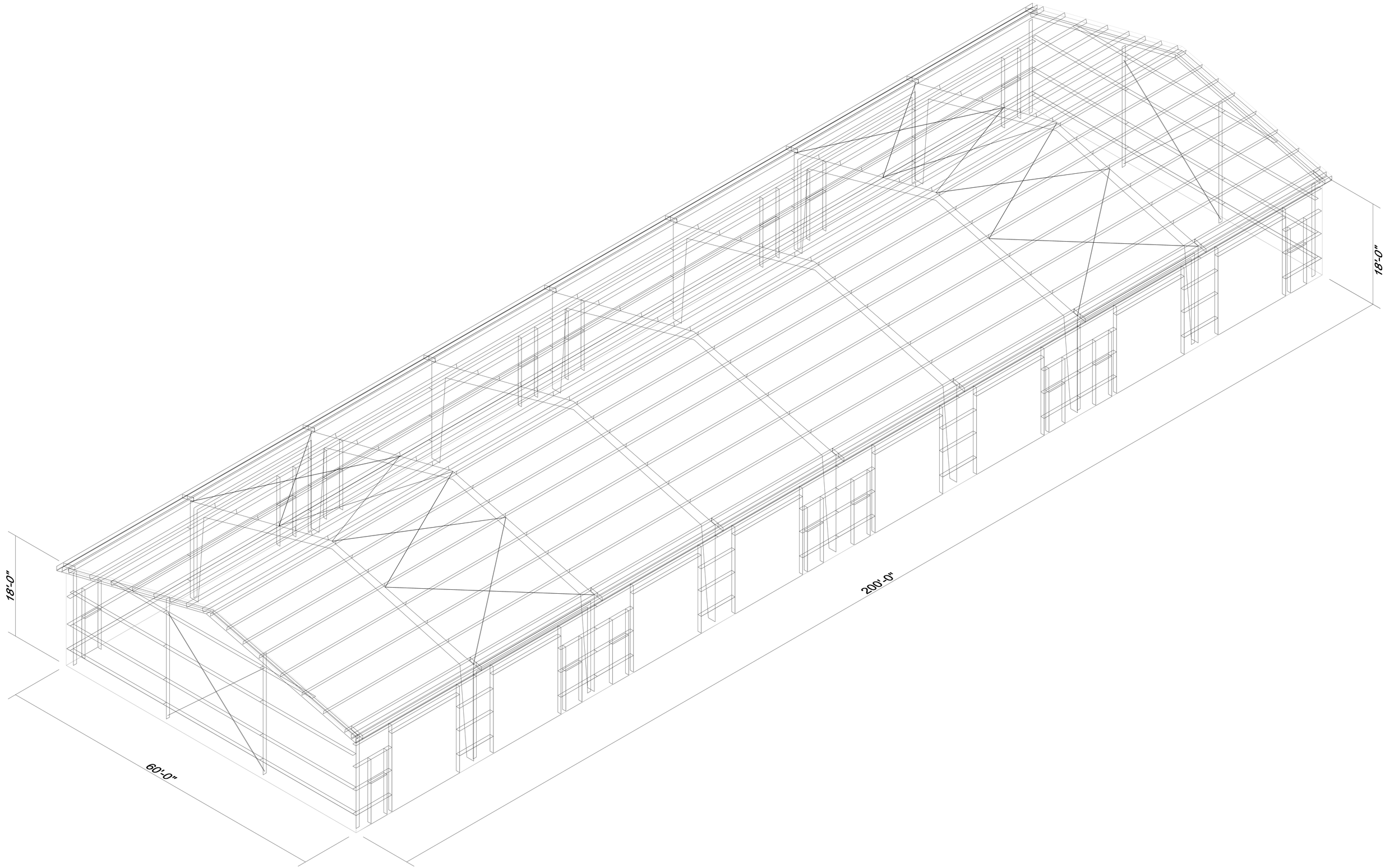
18'-0"
18'-0"
200'-0"
60'-0"

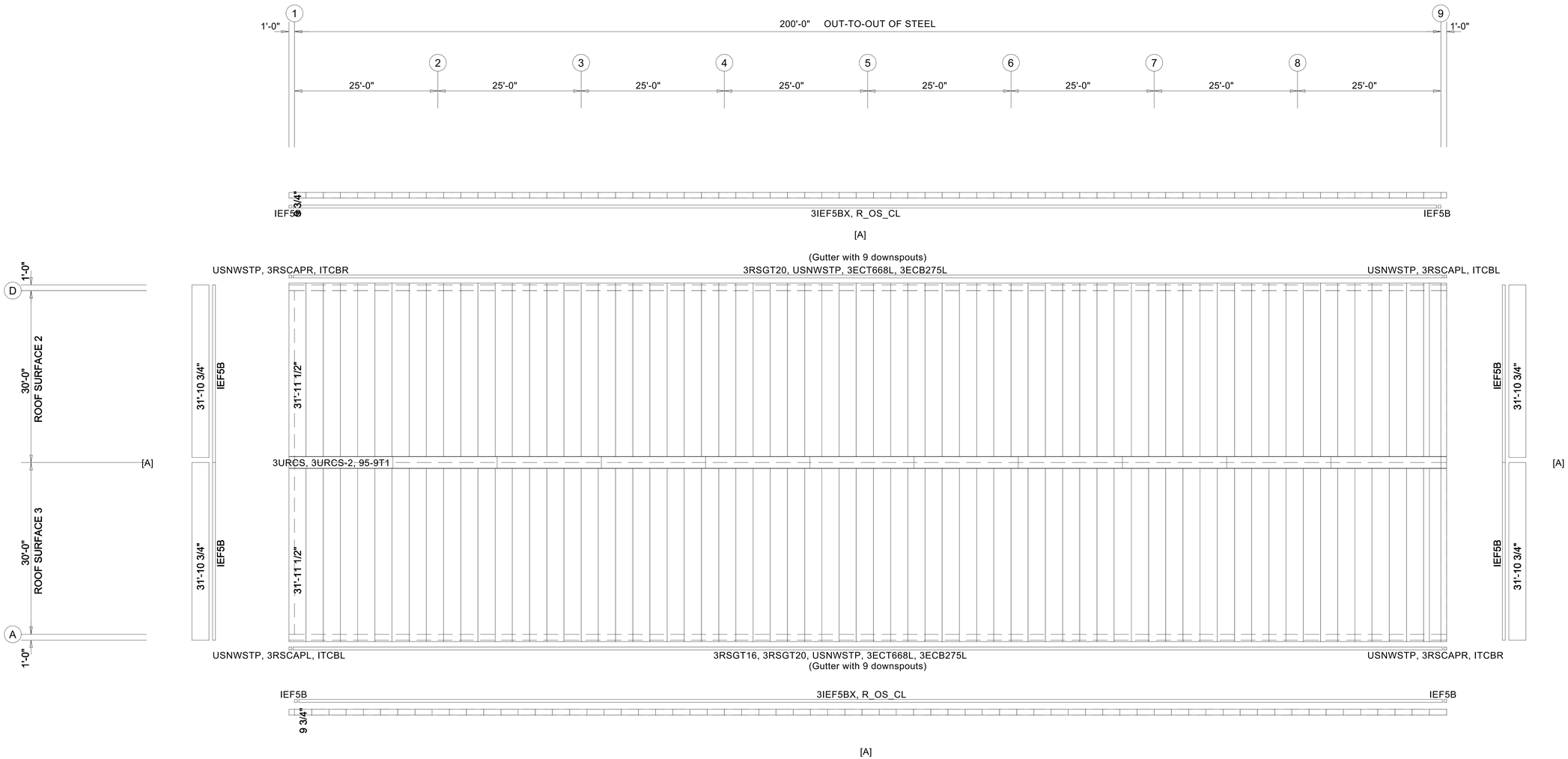

ROOF SHEETING PLAN

PANELS: 26 Ga. R - Galvalume
[A] SOFFIT PANELS: 26 Ga. R - TBD

GENERAL NOTES:

Panel "Start" and "End" dimensions must be followed for the proper installation of the gable trim(s) provided.

DRAWING IS NOT TO SCALE

Jayson Beechinor
60'-0" x 200'-0" x 18'-0"
DATE: 4/29/25 REVISION: 0
ENG: DWN: APPD:

F.O.47528-2-1

REVISION HISTORY

REV.	DESCRIPTION	DATE

Jayson Beechinor
DRAWING STATUS

THESE DRAWINGS HAVE BEEN GENERATED FOR VISUALIZATION PURPOSES ONLY. THEY ARE PRELIMINARY AND SHOULD NOT BE CONSIDERED FINAL. FINAL DRAWINGS WILL BE ISSUED ONLY AFTER AN ORDER HAS BEEN PLACED AND DESIGNATED "FOR FABRICATION".

PAGE OF