10 CONNOR LANE

DEER PARK, NY 11729

DEMOLITION NOTES

1. DEMOLISH AND REMOVE WALLS AS DESIGNATED ON THE DEMOLITION PLAN. PROTECT ALL ADJACENT WORK AS NECESSARY.
2. ALL DEMOLITION SHALL BE PERFORMED BY SKILLED MECHANICS, LICENSED IN THEIR TRADE IF REQUIRED.
3. PROTECT ALL EXISTING COMPONENTS WHICH ARE INDICATED ON THE DRAWINGS TO REMAIN.
4. ALL ELECTRICAL LINES DISTURBED BY THE DEMOLITION OF WALLS, CEILINGS, AND FLOORS SHALL BE PROPERLY CAPPED AS REQUIRED. ALL COMPUTER AND COMMUNICATIONS LINES SHALL BE REMOVED, CAPPED, RELOCATED, AND/OR MODIFIED AS PER THE OWNER'S INSTRUCTIONS.
5. THE CONTRACTOR SHALL BE RESPONSIBLE FOR PERFORMING ANY ADDITIONAL DEMOLITION AND REMOVAL AS MAY BE REQUIRED BY THE SCOPE OF THE CONTRACT DOCUMENTS.
6. THE CONTRACTOR SHALL TAKE CARE DURING DEMOLITION TO MAINTAIN EXISTING SERVICES (I.E. GAS, ELECTRIC, ETC). ANY DAMAGE TO THE BUILDING OR FURNITURE AND DECOR WITHIN/DURING THE COURSE OF THE WORK, SHALL BE THE RESPONSIBILITY OF THE CONTRACTOR. ALL DEMOLITION SHALL BE PERFORMED WITH MINIMUM INTERFERENCE TO SIDEWALKS, AND FACILITIES.
7. THE CONTRACTOR SHALL ASSUME RISK REGARDING DAMAGE OR LOSS, WHETHER BY REASON OF FIRE, THEFT, OR ANY OTHER CAUSE, TO THE DEMISED PREMISES AFTER THE CONTRACT IS SIGNED; NO SUCH DAMAGE OR LOSS SHALL RELIEVE THE CONTRACTOR FROM CONTRACT OBLIGATION TO COMPLETE THE WORK.
8. THE CONTRACTOR SHALL DISPOSE OF ALL DEMOLISHED MATERIAL, INCLUDING CARTING AWAY DEMOLISHED MATERIAL FROM THE SITE, IN A MANNER APPROVED BY THE BUILDING MANAGEMENT AND GOVERNMENT REGULATIONS, IMMEDIATELY AFTER DEMOLITION, UNLESS OTHERWISE INSTRUCTED BY THE ARCHITECT.
9. ALL MATERIALS NOTED FOR DEMOLITION BECOME THE PROPERTY OF THE CONTRACTOR, UNLESS SPECIFICALLY NOTED OTHERWISE. THE CONTRACTOR SHALL CHECK WITH OWNER REGARDING RETAINAGE AND/OR RELOCATION OF ALL EQUIPMENT AND MATERIALS REMOVED.
10. ALL ADJACENT BUILDING AREAS TO BE THOROUGHLY PROTECTED DURING REMOVALS. ALL WALLS AND FLOORS TO BE PROTECTED ALONG PASSAGEWAYS TO STREET. ELEVATOR CABS TO BE PROTECTED AS REQUIRED. ALL DUST AND DEBRIS TO BE CONTAINED WITHIN THE AREA.
11. THE CONTRACTOR IS REQUIRED TO PROVIDE PATCHING AND REPAIR TO ADJACENT WALLS, CEILINGS, AND FLOORS DAMAGED IN THE COURSE OF DEMOLITION.
12. THE CONTRACTOR SHALL OBTAIN AND PAY FOR ALL FEES, PERMITS, AND INSPECTIONS WHEN AND IF REQUIRED IN CONNECTION WITH THE DEMOLITION, REMOVAL, AND DISPOSAL OF ALL DEBRIS.

ELECTRICAL NOTES

1. THE COMPLETE INSTALLATION SHALL BE IN ACCORDANCE WITH ALL APPLICABLE NATION, STATE, AND LOCAL CODE REQUIREMENTS. ELECTRICAL CONTRACTOR TO ARRANGE FOR NECESSARY PERMITS AND INSPECTIONS, AND COVER ANY COSTS INCURRED.
2. THE CONTRACTOR SHALL DO ALL CUTTING REQUIRED FOR HIS INSTALLATION. ALL NEW WIRING, BOXES AND BREAKER PANELS TO BE BURIED IN WALL UNLESS OTHERWISE NOTED AS WIRE MOLD.
3. CONTRACTOR TO VERIFY THE ADEQUACY OF EXISTING SERVICE FOR THE NEW LOAD. IF ADDITIONAL SERVICE IS REQUIRED, CONTRACTOR TO REPORT SAME TO ARCHITECT AND INCLUDE THE COST OF THE ADDITIONAL WORK AND WORK REQUIRED BY THE UTILITY IN THE BID. CONTRACTOR RESPONSIBLE FOR COORDINATION WITH AND CHARGES FROM LOCAL UTILITY.
5. G.C. TO FILE ELECTRICAL WORK UNDER A SEPARATE APPLICATION WITH THE BUREAU OF ELECTRICAL CONTROL (B.E.C.). ALL PERMIT AND APPLICATION FEES ARE THE RESPONSIBILITY OF THE CONTRACTOR.

PLUMBING NOTES

1. ALL NEW PLUMBING WORK SHALL COMPLY WITH THE MOST CURRENT REQUIREMENTS OF THE NEW YORK STATE AND LOCAL PLUMBING CODE.
2. THE PLUMBING CONTRACTOR/SUBCONTRACTOR SHALL BE A LICENSED AUTHORIZED INSTALLER OF PLUMBING SYSTEMS AND SHALL HAVE A MINIMUM 5 YEARS EXPERIENCE IN THE INSTALLATION OF PLUMBING SYSTEMS IN THE NEW YORK AREA.
3. G.C. TO APPLY TO UTILITY FOR ADDITIONAL WATER/WASTE SERVICE AS REQUIRED.
4. G.C. TO COORDINATE WITH WATER/ UTILITY AS REQUIRED.
5. G.C. RESPONSIBLE FOR ALL CHARGES BY THE WATER UTILITY

SITE IMPROVEMENT

1. SEE CIVIL ENGINEERING DRAWINGS FOR SITE IMPROVEMENT NOTES.

2

GENERAL NOTES

1. THE CONTRACTOR SHALL VISIT THE SITE AND BE RESPONSIBLE FOR HAVING RECORDED ALL CONDITIONS WITHIN THE SCOPE OF THE PROJECT. NO CLAIMS FOR EXTRA COMPENSATION, BASED ON IGNORANCE OF VISIBLE OR IMPLIED CONDITIONS WILL BE CONSIDERED.
2. THE GENERAL CONTRACTOR IS TO VERIFY ALL INDICATED CONDITIONS BEFORE STARTING WORK AND REPORT ANY DISCREPANCIES TO THE ARCHITECT. THE DRAWINGS REFLECT CONDITIONS REASONABLY INTERPRETED FROM THE EXISTING VISIBLE CONDITIONS BUT CANNOT BE GUARANTEED BY THE ARCHITECT.
3. IN CASE OF INCONSISTENCY BETWEEN THE DRAWINGS AND SPECIFICATIONS, OR WITHIN EITHER DOCUMENT NOT CLARIFIED BY ADDENDUM, THE BETTER QUALITY OR GREATER QUANTITY OF WORK SHALL BE PROVIDED IN ACCORDANCE WITH THE ARCHITECT'S INTERPRETATION.
4. ALL WORK IS TO CONFORM TO NEW YORK STATE AND LOCAL BUILDING CODE REQUIREMENTS, FIRE DEPARTMENT REGULATIONS, UTILITY COMPANY REQUIREMENTS, OSHA AND THE BEST TRADE PRACTICES.
5. MINOR DETAILS NOT USUALLY SHOWN OR SPECIFIED, BUT NECESSARY FOR THE PROPER AND ACCEPTABLE CONSTRUCTION, INSTALLATION, OR OPERATION OF ANY PART OF THE WORK AS DETERMINED BY THE ARCHITECT, SHALL BE INCLUDED IN THE WORK AS IF IT WERE SPECIFIED OR INDICATED IN THE DRAWINGS.
6. THE CONTRACTOR SHALL OBTAIN AND PAY FOR ALL REQUIRED PERMITS, SCHEDULE ALL REQUIRED INSPECTIONS, OBTAIN ALL CODE APPROVALS AND FILE FOR THE NEW CERTIFICATE OF OCCUPANCY AS (AND IF) REQUIRED.
7. THE CONTRACTOR SHALL COORDINATE ALL WORK PROCEDURES WITH LOCAL AUTHORITIES.
8. THE CONTRACTOR SHALL BE RESPONSIBLE FOR THE PROTECTION OF ALL EXISTING AND NEW CONDITIONS AND MATERIALS WITHIN THE PROPOSED CONSTRUCTION AREA. ANY DAMAGE CAUSED BY OR DURING THE EXECUTION OF THE WORK IS THE RESPONSIBILITY OF THE CONTRACTOR AND SHALL BE REPAIRED TO THE OWNERS AND/OR TENANTS SATISFACTION AT THE EXPENSE OF THE CONTRACTOR.
9. THE CONTRACTOR SHALL KEEP THE CONSTRUCTION SITE FREE AND CLEAR OF ALL DEBRIS AND KEEP OUT ALL UNAUTHORIZED PERSONS. UPON COMPLETION OF THE WORK, THE ENTIRE CONSTRUCTION AREA IS TO BE COMPLETELY CLEANED AND PREPARED FOR OCCUPANCY BY THE TENANT.
10. DRAWINGS MAY BE ROUGH SCALED FOR ESTIMATING AND GENERAL REFERENCE. FOR ALL OTHER DIMENSIONS OR LOCATIONS CONSULT WITH THE ARCHITECT. FIELD VERIFY ALL DIMENSIONS.
11. THE CONTRACTOR SHALL LAY OUT HIS WORK AND BE RESPONSIBLE FOR ALL DIMENSIONS AS REQUIRED FOR SUB TRADES, ELECTRICAL, PLUMBING, ETC.
12. ALL PATCHING OF EXISTING CONDITIONS SHALL START AT THE NEAREST BREAK IN PLANE OR DIRECTION. PATCH ALL FLOOR AREAS WHERE EXISTING WALLS ARE RELOCATED OR REMOVED WITH MATCHING MATERIALS AND FINISHES.
13. THE CONTRACTOR SHALL DESIGN AND INSTALL ADEQUATE SHORING AND BRACING AS REQUIRED FOR ALL STRUCTURAL OR REMOVAL TASKS AND SHALL HAVE SOLE RESPONSIBILITY FOR ALL DAMAGE OR INJURIES CAUSED BY THIS WORK AND SHALL REPAIR ALL DEFECTS AT HIS SOLE EXPENSE. AS PART OF THIS CONTRACT,THE CONTRACTOR SHALL RETAIN A LICENSED ENGINEER TO DESIGN ALL SHORING AND SUBMIT APPLICATION(S) FOR SHORING WORK AS REQUIRED BY THE DEPARTMENT OF BUILDINGS.
14. ALL WORK SHALL BE GUARANTEED FOR ONE YEAR AFTER FINAL APPROVAL. THE GENERAL CONTRACTOR SHALL SIGN THE WRITTEN GUARANTEE AS PROVIDED BY THE OWNER AND/OR TENANT. THIS GUARANTEE SHALL COVER ALL OF THE GENERAL AND SUB CONTRACTOR WORK. ALL DEFECTS DISCOVERED DURING THIS GUARANTEE PERIOD SHALL BE REPAIRED TO THE OWNER AND.OR TENANTS SATISFACTION AT THE CONTRACTOR'S EXPENSE AT NO COST TO THE OWNER AND/OR TENANT.
15. THE CONTRACTOR SHALL BE RESPONSIBLE FOR ALL EQUAL OPPORTUNITY HIRING STANDARDS OR REQUIREMENTS.

LIGHTING POWER TABLE

FIXTURE TYPE	MODEL LUMINARES	WATT / FIXTURE	# FIXTURES	TOTAL (WATTS)
OFFICES				
RECESSED DOWNLIGHT	PHILLIPS 1001F134: (1) COMPACT FLUORESCENT	13 W	5	65 W
2' X 2' FLUORESCENT	(2) 2' 17WT8	34 W	5	170 W
2' X 4' FLUORESCENT	(2) 4' T8	58 W	16	928 W
TOTAL				1,163 W
MEN'S RESTROOM				
2' X 2' FLUORESCENT	(2) 2' 17WT8	34 W	1	34 W
WOMEN'S RESTROOM				
2' X 2' FLUORESCENT	(2) 2' 17WT8	34 W	1	34 W

ENERGY ANALYSIS: 2015 IECC
COMMERCIAL USE

INTERIOR RENOVATION OF 1 STORY BUILDING

CLIMATE ZONE: *4*

ITEM DESCRIPTION	PROPOSED DESIGN VALUE	PRESCRIBED VALUE & CODE CITATION
EXTERIOR ENVELOPE		
ROOF	NO CHANGE	OK
WALLS	NO CHANGE	OK
SLAB	NO CHANGE	OK
LIGHTING POWER		
NEW OFFICES	1,163 WATTS (SEE LIGHTING POWER TABLE)	TABLE C405.4.2(1) 1,432 SF X .82 W/SF = 1,174 W MAX 1,163 W < 1,174 W OK
NEW MEN'S RESTROOM	34 WATTS (SEE LIGHTING POWER TABLE)	TABLE C405.4.2(2) 56 SF X .98 W/SF = 55 W ALLOWABLE 34 W < 55 W OK
NEW MEN'S RESTROOM	34 WATTS (SEE LIGHTING POWER TABLE)	TABLE C405.4.2(2) 56 SF X .98 W/SF = 55 W ALLOWABLE 34 W < 55 W OK

ARCHITECT'S NOTE:
TO THE BEST OF MY KNOWLEDGE, BELIEF, AND PROFESSIONAL JUDGEMENT, THESE PLANS AND SPECIFICATIONS ARE IN COMPLIANCE WITH THE 2015 INTERNATIONAL ENERGY CONSERVATION CODE AS ADOPTED BY THE TOWN OF BABYLON

PLOT PLAN

SCALE 1/64" = 1'-0"

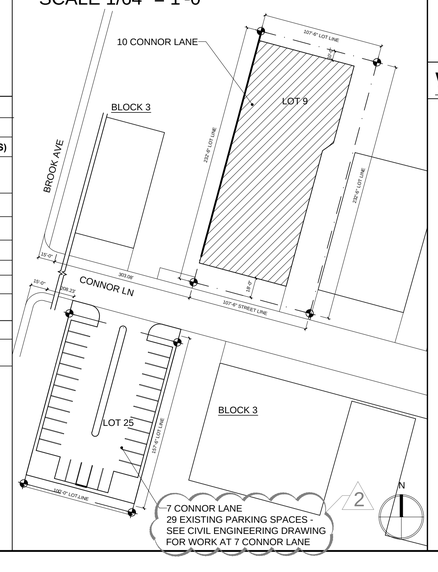

7 CONNOR LANE
29 EXISTING PARKING SPACES - SEE CIVIL ENGINEERING DRAWING FOR WORK AT 7 CONNOR LANE

2

CONSULTANTS

2

ARCHITECT
ALAN BARRY SILBERSTANG
SILBERSTANG LASKY ARCHITECTS P.C.
250 W 26TH STREET
NEW YORK, NY 10001
PH.- 212.242.3234
FX.- 212.242.3304

CIVIL ENGINEER
ERIC JETER
D&B ENGINEERS AND ARCHITECTS P.C.
330 CROSSWAYS PARK DRIVE
WOODBURY, NY 11797
PH.- 516.364.9890
FX.- 516.364.9045

ZONING ANALYSIS:

ZONING	G			
LOT SIZE	25,003 SF			
ZONING ISSUE ***CODE CITATION***	**REQUIRED**	**EXISTING**	**PROPOSED**	**COMPLIES**
BUILDING AREA ***(13-174)***	BUILDING AREA < 40% LOT AREA	17,119 SF > 10,001 SF (40% LOT AREA)	*NO CHANGE*	*EXISTING NON-CONFORMING NO CHANGE*
LOT AREA; STREET FRONTAGE ***(213-168)***	15,000 SF MIN. 50 FT MIN.	25,003.05 SF 107.54 FT	*NO CHANGE*	*OK*
FRONT YARD ***(213-169)***	10 FT MIN. WIDTH	18 FT	*NO CHANGE*	*OK*
SIDE YARDS ***(213-172)***	19 FT MIN. WIDTH	±26'-8" FT	*NO CHANGE*	*OK*
REAR YARD ***(213-173)***	10 FT MIN. WIDTH	10 FT	*NO CHANGE*	*OK*
TOTAL HEIGHT ***(213-167)***	35 FT MAX	26 FT	*NO CHANGE*	*OK*
PARKING SPACES ***(213-286)***	1/700 SF GROSS = 25 PARKING SPACES	29 PARKING SPACES	*NO CHANGE*	*OK*

BATHROOM FIXTURE COUNT ANALYSIS:

LOCATION	AREA (GROSS SF)	SF / OCCUPANT (GROSS SF)	# OCCUPANTS	WC REQUIRED PER SEX	LAV. REQUIRED PER SEX
GARAGE	**7,127 SF**	**100 SF**	**72**	**1**	**1**
WAREHOUSE:					
WAREHOUSE SPACE	**8,550 SF**	**500 SF**	**18**	**1**	**1**
OFFICE (ACCESSORY SPACE)	**1,432 SF**	**100 SF**	**15**		

DRAWING LIST

ARCHITECTURAL

A-000.00	COVER SHEET
A-101.00	LAYOUT PLAN & RCP
A-102.00	LAYOUT PLAN

CIVIL ENGINEERING

1	SITE IMPROVEMENT PLAN
2	SITE IMPROVEMENT DETAILS

2

EXISTING BUILDING INFORMATION :

ADDRESS -	10 CONNOR LANE, DEER PARK, NY 11729
BLOCK -	3
LOT -	9
ZONE -	G
LANDMARK STATUS -	*NO*
LOT FRONTAGE -	107.54'
LOT DEPTH -	232.5'
LOT AREA -	25,003 SF
BUILDINGS ON LOT -	1
NUMBER OF FLOORS -	1 STORY
BUILDING HEIGHT -	±26'-6"
FILING CODE -	CODE OF THE TOWN OF BABYLON, NEW YORK 2015 CODE OF NEW YORK STATE
OCCUPANCY -	S1
BUILDING AREA-	17,119 SF
CONSTRUCTION CLASS.-	IIB

PROJECT DESCRIPTION

OVERVIEW

THIS PROJECT IS AN INTERIOR RENOVATION TO AN EXISTING BUILDING . WORK INCLUDES *PARTITIONS, PLUMBING, ELECTRICAL, AND FINISHES.*

NO CHANGE TO OCCUPANCY AND CONSTRUCTION CLASS.

SCOPE OF APPLICATIONS:

THIS APPLICATION COVERS ARCHITECTURAL, *PLUMBING* WORK, AND SITE IMPROVEMENT.

2 *SPRINKLER WORK TO BE FILED UNDER SEPARATE APPLICATION.*

PLUMBING RISER

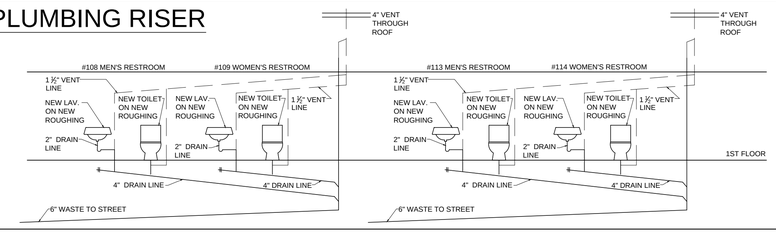

WALL TYPES

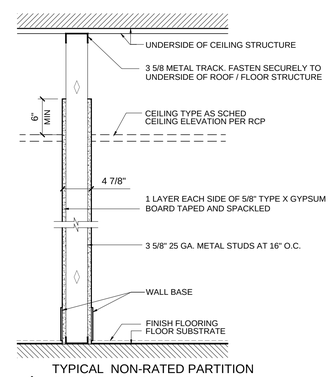

A TYPICAL NON-RATED PARTITION (NO SOUND INSULATION)
SCALE: 1" = 1'-0"

CEILING TYPES

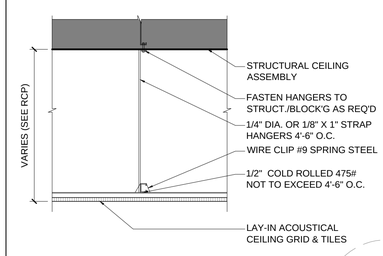

CLG-2 ACOUSTICAL LAY-IN CEILING
SCALE: 1"=1'-0"

THESE DRAWINGS ARE AN INSTRUMENT OF SERVICE OF SILBERSTANG LASKY ARCHITECTS AND MAY NOT BE USED WITHOUT THEIR EXPRESS WRITTEN PERMISSION

© COPYRIGHT 2017 SILBERSTANG LASKY ARCHITECTS, P.C.

(DO NOT SCALE DRAWINGS)

ISSUED	DESCRIPTION
06.07.2017	REVISION 2 FILING SET
01.05.2017	REVISION 1 FILING SET
10.13.2016	FILING SET

SILBERSTANG LASKY Architects
250 West 26th Street
New York, NY 10001
212.242.3234 T
212.242.3304 F

10 CONNOR LANE
DEER PARK, NY 11729

DATE :	AS NOTED
PROJECT No :	16030
SCALE :	AS NOTED
DRAWN BY :	ST
REVIEW BY :	JF

SHEET NAME :
COVER SHEET

SHEET No.
A-000.00

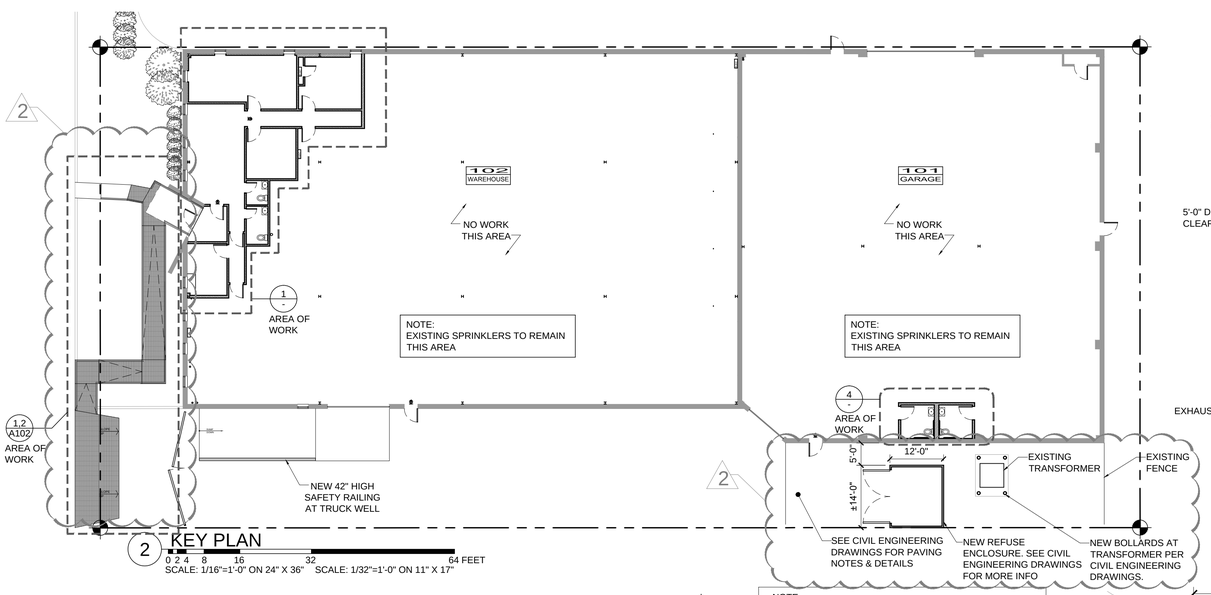

2 KEY PLAN
0 2 4 8 16 32 64 FEET
SCALE: 1/16"=1'-0" ON 24" X 36" SCALE: 1/32"=1'-0" ON 11" X 17"

NOTE:
1. ALL MECHANICAL, SPRINKLER, & FIRE ALARM WORK IS TO BE FILED UNDER SEPARATE APPLICATION
2. ALL EXISTING DRAINAGE STRUCTURES TO BE CLEANED OF DEBRIS AND SILT
3. REMOVE ALL DEBRIS FROM SITE

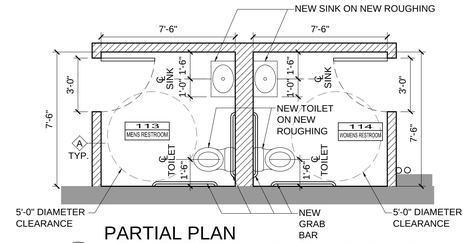

4 PARTIAL PLAN
AT BATHROOM IN GARAGE SPACE
0 1 2 4 8 16 FEET
SCALE: 1/4"=1'-0" ON 24" X 36" SCALE: 1/8"=1'-0" 11" X 17"

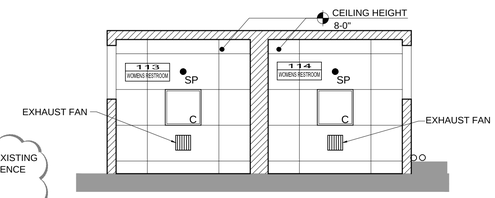

5 PARTIAL RCP
AT BATHROOM IN GARAGE SPACE
0 1 2 4 8 16 FEET
SCALE: 1/4"=1'-0" ON 24" X 36" SCALE: 1/8"=1'-0" 11" X 17"

BATHROOM ACCESSIBILITY REQUIREMENTS

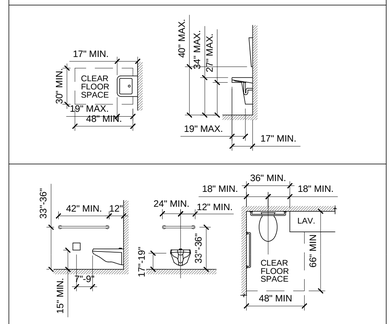

CONTRACTOR TO COORD. INSTALLATION OF BLOCKING FOR GRAB BARS.

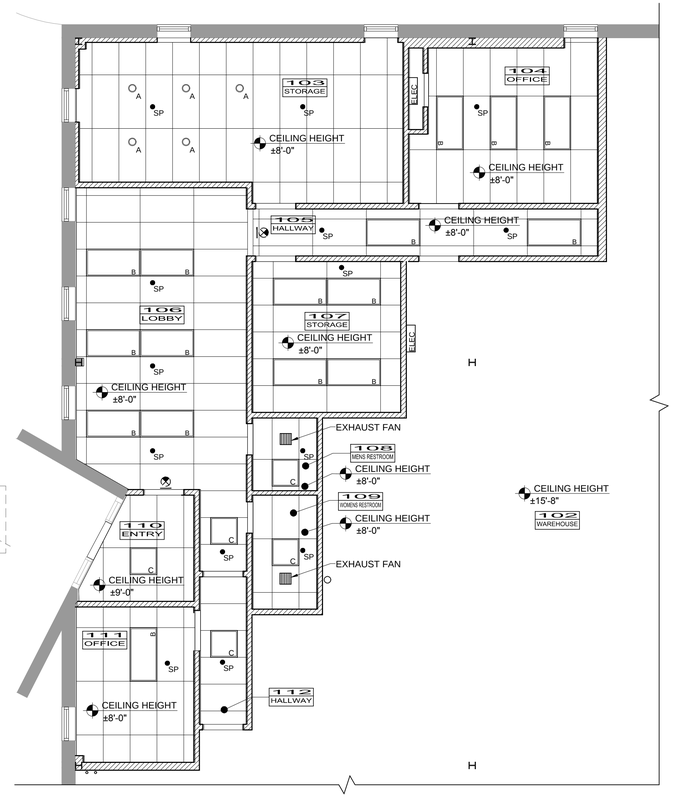

3 PARTIAL RCP
AT WAREHOUSE SPACE
0 1 2 4 8 16 FEET
SCALE: 3/16"=1'-0" ON 24" X 36" SCALE: 3/32"=1'-0" ON 11" X 17"

LEGEND:

SYMBOL	DESCRIPTION
	EXISTING WALL
	NEW WALL
SP	SPRINKLER HEAD SPRINKLER WORK TO BE FILED UNDER SEPARATE APPLICATION
	CEILING FAN & GRILL
	EXIT SIGN
	ACOUSTIC CEILING TILE & GRID SYSTEM

LIGHTING LEGEND

SYMBOL	FIXTURE
A	COMPACT FLUORESCENT DOWN LIGHT FIXTURE
B	2'X4' FLUORESCENT TROFFER LIGHT
C	2'X2' FLUORESCENT TROFFER LIGHT

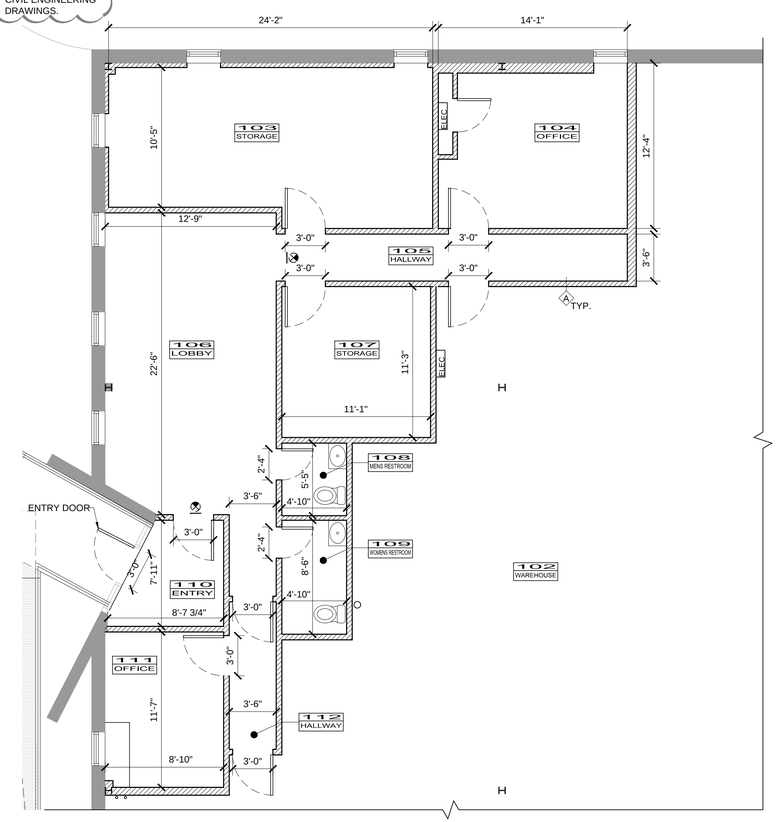

1 PARTIAL PLAN
AT WAREHOUSE SPACE
0 1 2 4 8 16 FEET
SCALE: 3/16"=1'-0" ON 24" X 36" SCALE: 3/32"=1'-0" ON 11" X 17"

THESE DRAWINGS ARE AN INSTRUMENT OF SERVICE OF SILBERSTANG LASKY ARCHITECTS AND MAY NOT BE USED WITHOUT THEIR EXPRESS WRITTEN PERMISSION

© COPYRIGHT 2017 SILBERSTANG LASKY ARCHITECTS, P.C.

(DO NOT SCALE DRAWINGS)

PLAN NORTH

ISSUED	DESCRIPTION
06.07.2017	REVISION 2 FILING SET
01.05.2017	REVISION 1 FILING SET
10.13.2016	FILING SET

10 CONNOR LANE
DEER PARK, NY 11729

SILBERSTANG
LASKY Architects
250 West 26th Street
New York, NY 10001
212.242.3234 T
212.242.3304 F

DATE :	AS NOTED
PROJECT No :	16030
SCALE :	AS NOTED
DRAWN BY :	ST/JL
REVIEW BY :	JF

SHEET NAME :
PLANS

SHEET No.
A-101.00
SHEET 2 OF 3

S:\Architectural Projects\Active\Projects\16030 10 Connor Ln\16030 Contract Documents\16030-CAD\16030 Permit\16030 Filing Set Rev 2\16030-A100.00 LAYOUT.dwg, 6/14/2017 12:19:05 PM, DWG To PDF.pc3

3 NOT USED

0 2 4 8 16 32 64 FEET

SCALE: 1/16"=1'-0" ON 24" X 36" SCALE: 1/32"=1'-0" ON 11" X 17"

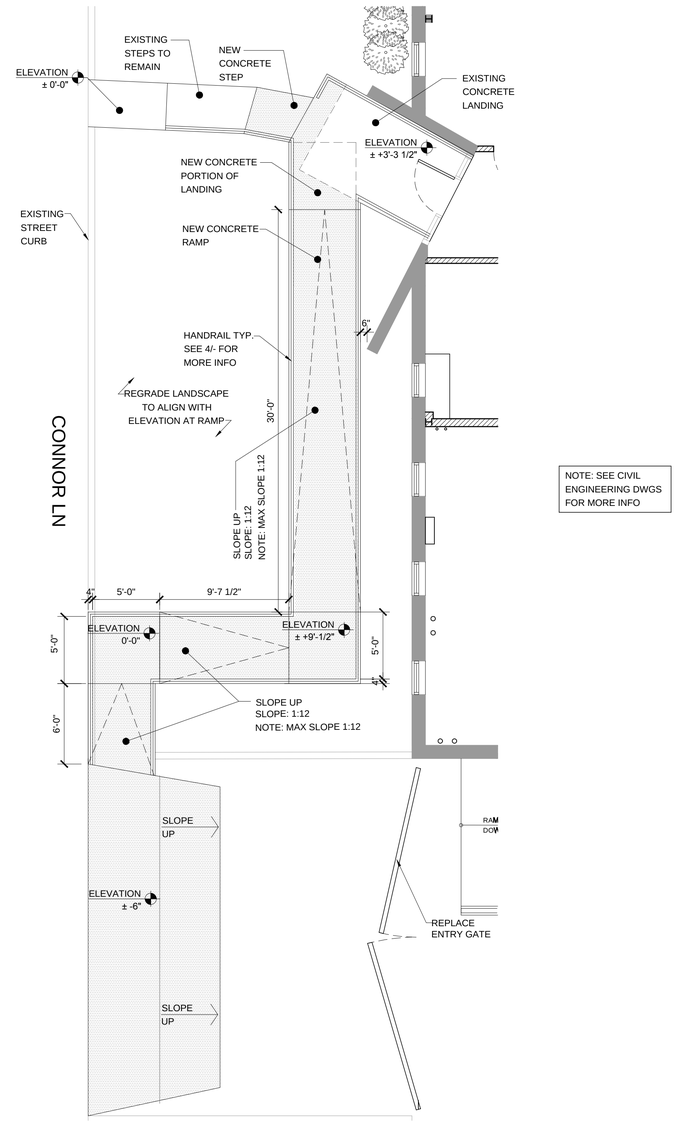

NOTE: SEE CIVIL ENGINEERING DWGS FOR MORE INFO

2 PARTIAL NEW PAVING AT WAREHOUSE ENTRY

0 1 2 4 8 16 FEET

SCALE: 3/16"=1'-0" ON 24" X 36" SCALE: 3/32"=1'-0" ON 11" X 17"

1 NOT USED

0 1 2 4 8 16 FEET

SCALE: 3/16"=1'-0" ON 24" X 36" SCALE: 3/32"=1'-0" ON 11" X 17"

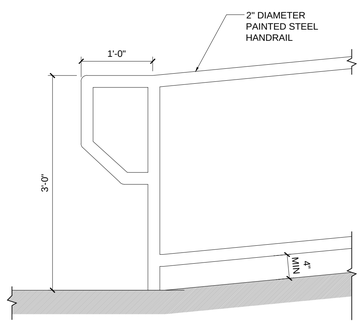

4 TYP. SECTION DETAIL AT HANDRAIL

0 1 2 FEET

SCALE: 1"=1'-0" ON 24" X 36"
SCALE: 1/2"=1'-0" ON 11" X 17"

THESE DRAWINGS ARE AN INSTRUMENT OF SERVICE OF SILBERSTANG LASKY ARCHITECTS AND MAY NOT BE USED WITHOUT THEIR EXPRESS WRITTEN PERMISSION

© COPYRIGHT 2017 SILBERSTANG LASKY ARCHITECTS, P.C.

(DO NOT SCALE DRAWINGS)

PLAN NORTH

ISSUED	DESCRIPTION
06.07.2017	REVISION 2 FILING SET
01.05.2017	REVISION 1 FILING SET
10.13.2016	FILING SET

10 CONNOR LANE
DEER PARK, NY 11729

SILBERSTANG LASKY Architects
250 West 26th Street
New York, NY 10001
212.242.3234 T
212.242.3304 F

DATE :	AS NOTED
PROJECT No :	16030
SCALE :	AS NOTED
DRAWN BY :	ST/JL
REVIEW BY :	JF

SHEET NAME :
PLANS

SHEET No.
A-102.00

SHEET 3 OF 3