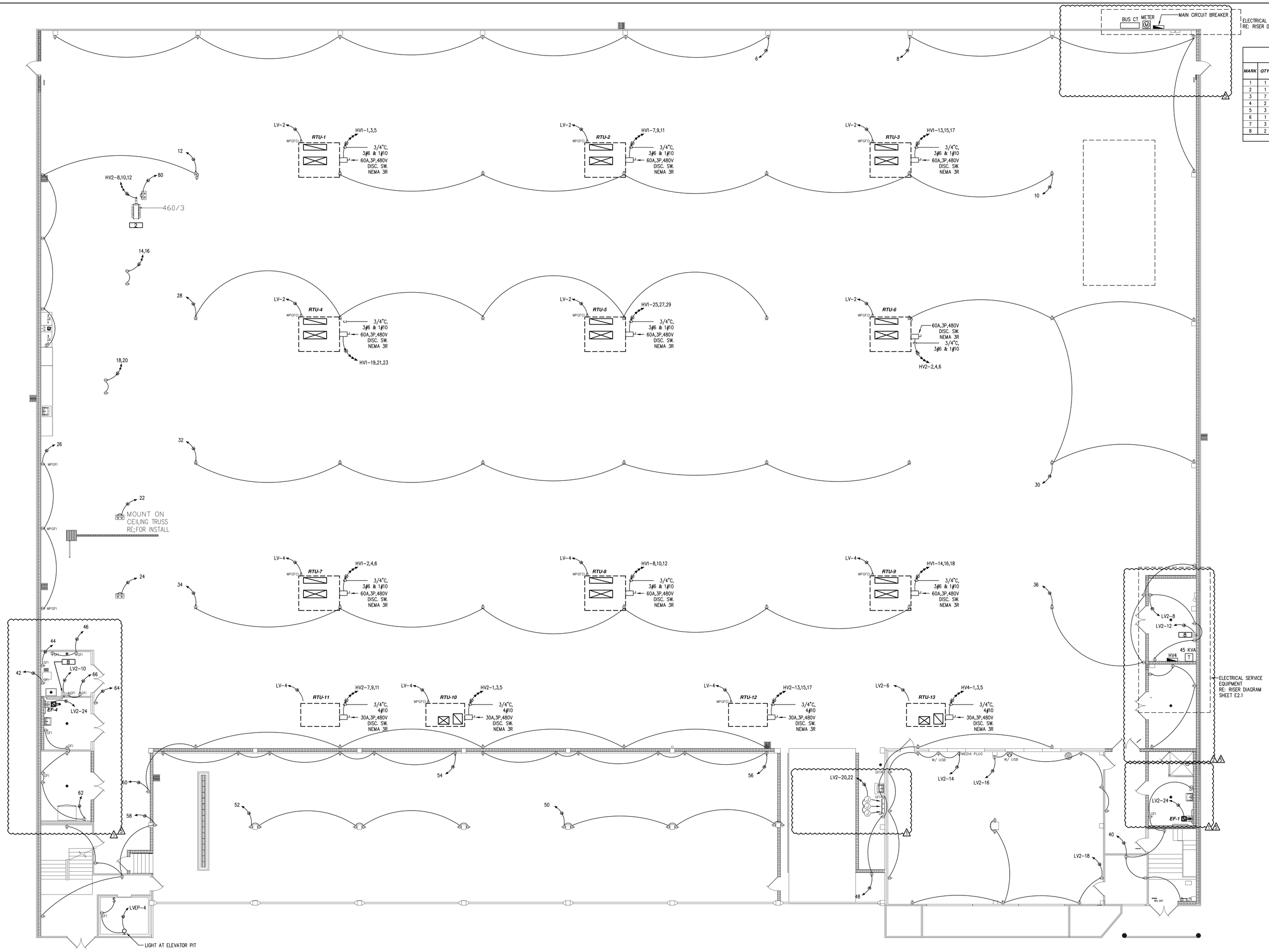

SCALE: 1/8" = 1'-0"

FIRST FLOOR POWER PLAN (A)

EQUIPMENT SCHEDULE

MARK	QTY	MAKE	MODEL	DESCRIPTION	REMARKS	ELECTRICAL HP	VOLT	PH	AMP	MCA	MOP	VA
1	1	CAS	RSS3CNC	AIR COMPRESSOR			460	3	8			6374
2	1	EUROVENT	AF10-R12026--6	VEHICLE EXHAUST EXTRACTION	240 CFM ROOF-MTD. FAN	1/2	460	3	1.1			913
3	7	CORNELL IRON WRKS	ESD20	OVERHEAD DOOR	21'-8"x13'-10"	1	460	3	2.1			12201
4	2	CORNELL IRON WRKS	ESD20	OVERHEAD DOOR	7'-0"x10'-3"	1/2	460	3	1.1			1752
5	3	CORNELL IRON WRKS	ESD20	OVERHEAD DOOR	10'-0"x4'-6"	1/2	460	3	1.1			2628
6	1	CORNELL IRON WRKS	ESD20	OVERHEAD DOOR	4'-3"x7'-6"	1/2	460	3	1.1			876
7	3	DELOS	–	AUTOMATIC BOLLARD CONTROL			220	1				1000
8	2	RINNAI	RL94i	GAS TANKLESS WATER HEATER	CORD & PLUG CONN.		120	1	1			240
											TOTAL	25,982

ELECTRICAL LEGEND

POWER LEGEND

SYMBOL	DESCRIPTION
	HOME RUN (PANEL, BREAKER POSITION, # OF CIRCUITS INDICATED)
A-1,3,5 M	METER
	PANELBOARD
	DISCONNECT SWITCH
T	TRANSFORMER
A	GENERATOR AUTOMATIC TRANSFER SWITCH
J	JUNCTION BOX
	MOTOR
	EXHAUST FAN (RE: MECHANICAL PLANS)
S	SINGLE POLE DOOR SWITCH
$	SINGLE POLE SWITCH
$2 $3 $4	SWITCH – DOUBLE POLE, 3 WAY, 4 WAY
$D	DIMMER SWITCH
$O	OCCUPANCY SENSOR WITH MANUAL SWITCH
$K	KEY-OPERATED SWITCH
$P	PILOT LIGHT SWITCH
	SINGLE RECEPTACLE
	DUPLEX RECEPTACLE
	QUAD RECEPTACLE
250	RECEPTACLE RATED AT 250V
	FLOOR MOUNTED RECEPTACLE
CLG	CEILING OR ATTIC MOUNTED RECEPTACLE
	HANGING RECEPTACLE
GC RC	RECEPTACLE MOUNTED BELOW OR ABOVE COUNTER
GFI	RECEPTACLE WITH GROUND FAULT CIRCUIT INTERRUPTER
GFI WP	EXTERIOR USE WEATHER-PROOF RECEPTACLE WITH GFCI
	TWIST-LOCK RECEPTACLE
SD	CEILING MOUNTED SMOKE DETECTOR
	CONTROL SWITCH/INTERFACE
	WALL SCONCE

DATA LEGEND

SYMBOL	DESCRIPTION
TV	CABLE TELEVISION OUTLET
	DATA OUTLET, WALL OR FLOOR MOUNTED
	TELEPHONE OUTLET, WALL OR FLOOR MOUNTED
	COMBINATION TEL/DATA OUTLET, WALL OR FLOOR MOUNTED

NOTES:
1. THIS IS A STANDARD SYMBOL LIST. ALL SYMBOLS DO NOT NECESSARILY APPEAR ON PLANS.
2. ALL RECEPTACLES TO BE RATED AT 20A, 125V U.O.N.
3. ALL SWITCHES TO BE MOUNTED AT 48" AFF MAX.
4. ALL RECEPTACLES AND OTHER OUTLETS TO BE MOUNTED AT 15" AFF MIN.

POWER PLAN NOTES

1. ALL 120V AND 208V HOME RUNS TO PANEL 1-V U.O.N.
2. ALL 15 & 20 AMP, 120V RECEPTACLES IN THE FOLLOWING AREAS SHALL HAVE GFCI PROTECTION AS PER ARTICLE 210.8(B)(5) N.E.C.:
   2.1. BATHROOMS
   2.2. KITCHEN
   2.3. ROOFTOP
   2.4. OUTDOOR
   2.5. WITHIN 6' OF A NEARBY SINK OR DRINKING FOUNTAIN.
3. PROVIDE SHUNT TRIP BREAKERS AT PANEL BOARDS AS REQUIRED.
4. LISTED OR LABELED EQUIPMENT SHALL COMPLY WITH ARTICLE 110.3 (B)
5. COORDINATE WITH HVAC AND PLUMBING CONTRACTORS AND EQUIPMENT SUPPLIERS BEFORE FINAL CONNECTIONS.
6. MAX. CONTINUOUS LOADING OF 1920 VA PER 20A/1P/120V CIRCUIT

IMPORTANT NOTE:
ALL EXISTING CONDITIONS SHALL BE FIELD-VERIFIED BY BUILDER/CONTRACTOR, WHO SHALL INFORM ENGINEER OF ANY DISCREPANCIES THAT MAY IMPACT THE WORK DESCRIBED HEREIN BEFORE COMMENCING ANY SUCH WORK.

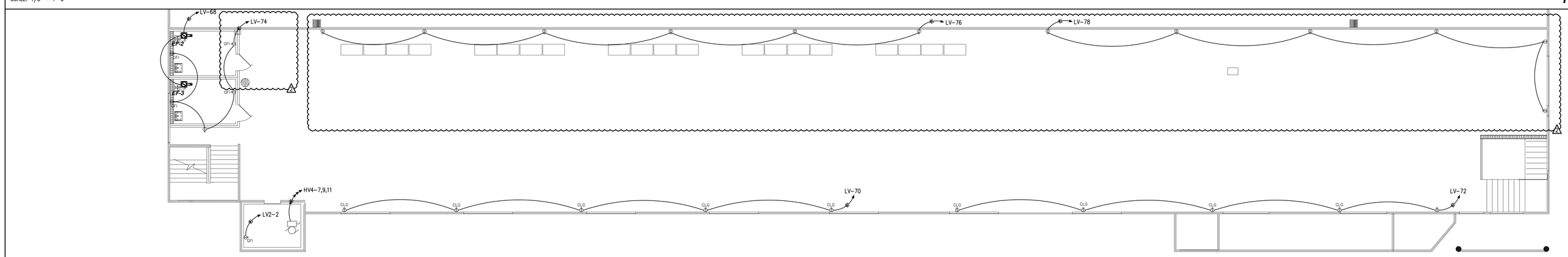

SCALE: 1/8" = 1'-0"

SECOND FLOOR POWER PLAN (B)

5' 0" 10'
SCALE: 1/8 INCH = 1 FOOT
GRAPHIC SCALE

MAGED I. RIFAAT 42314 TEXAS PROFESSIONAL ENGINEER 03/20/15

ISSUE HISTORY		REVISIONS	
DATE	ISSUED FOR	DATE	DESCRIPTION
	CLIENT REVIEW	12/12/14	1 COH COMMENTS DATED 12/10/14
11/12/14	PERMIT	01/02/15	2 MISC. OWNER REVISIONS
	BIDDING	02/05/15	3 MISC. OWNER REVISIONS
	CONSTRUCTION	03/20/15	4 MISC. OWNER REVISIONS
	FINAL REVIEW		

THE INTERFIELD GROUP
ARCHITECTURE | PLANNING | ENGINEERING
401 STUDEWOOD, SUITE 300
HOUSTON, TEXAS 77007
TEL. (713) 780-0909
TBPE REG. NO. F-5611
TBAE REG. NO. B8741

URBAN LIVING
PROPOSED RENOVATIONS
319 ST. EMANUEL STREET
HOUSTON, TX, 77002

POWER PLANS

DRAWN BY: DLK	DATE: 08/11/14	SHEET:	
CHECKED BY: MIR	PROJ. NO.: 14098.12	E1.1	OF: 4

SCALE: 1/8" = 1'-0"

FIRST FLOOR LIGHTING PLAN (A)

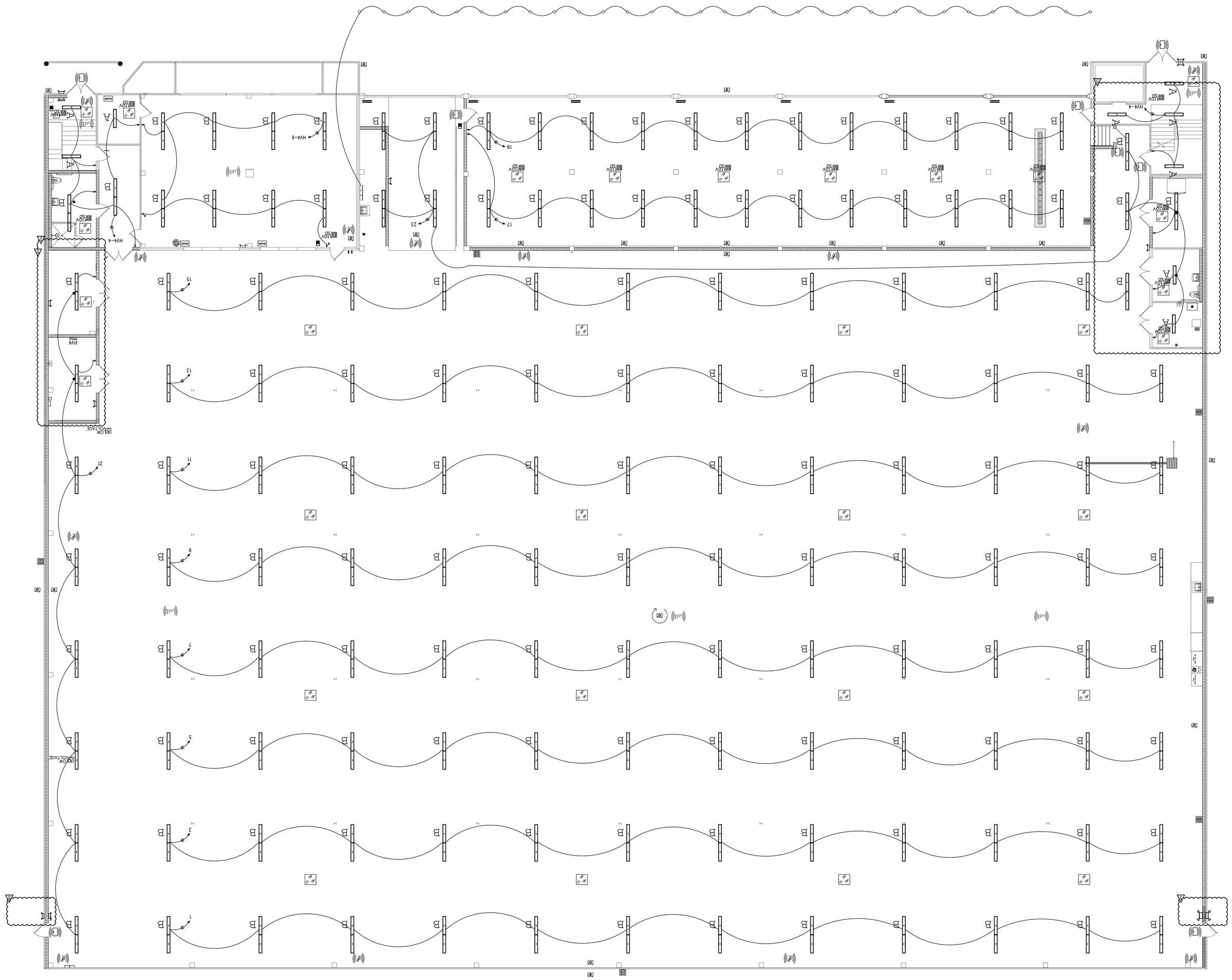

IMPORTANT NOTE:

ALL EXISTING CONDITIONS SHALL BE FIELD-VERIFIED BY BUILDER/CONTRACTOR. WHO SHALL INFORM OWNER/ENGINEER OF ANY DISCREPANCIES THAT MAY IMPACT THE WORK DESCRIBED HEREIN BEFORE COMMENCING ANY SUCH WORK.

GRAPHIC SCALE

SCALE: 1/8 INCH = 1 FOOT

5' 0" 10'

MADED L. BIRKAAT 42314 LICENSED PROFESSIONAL ENGINEER 03/20/15

DATE	ISSUED FOR	DATE	DESCRIPTION
ISSUE HISTORY		REVISIONS	
11/12/14	CLIENT REVIEW	12/12/14	(4) CON COMMENTS DATED 12/10/14
	PERMIT	01/02/15	(4) MISC. OWNER REVISIONS
	BIDDING	02/05/15	(4) MISC. OWNER REVISIONS
	CONSTRUCTION	03/20/15	(4) MISC. OWNER REVISIONS
	FINAL REVIEW		

THE INTERFIELD GROUP
ARCHITECTURE | PLANNING | ENGINEERING
401 STUDEMOOD, SUITE 300
HOUSTON, TEXAS 77007
TEL. (713) 780-0999
TBPE REG. NO. F-0411
TBAE REG. NO. BR741

URBAN LIVING

319 ST. EMANUEL STREET
HOUSTON, TX. 77002

PROPOSED RENOVATIONS

FIRST FLOOR LIGHTING PLAN

DRAWN BY: DLK | DATE: 08/11/14 | SHEET **E1.2** OF 4
CHECKED BY: MIR | PROJ. NO.: 14098.12

LIGHTING LEGEND

SYMBOL	DESCRIPTION
	EXIT SIGN 3W LED, 120V, 1½ HR BATTERY BACKUP
	EMERGENCY LIGHT 2-6W TL, 120V, 1½ HR BATTERY BACKUP
	EXIT/EMERGENCY COMBO 2-6W TS & 3W LED, 120V, 1½ HR BATTERY BACKUP
	8', LINEAR FLUORESCENT 6-54W T5HO, 277V
	4', LINEAR FLUORESCENT 3-54W T5HO, 277V
	OCCUPANCY SENSING DEVICE, CONTROLLED VIA P.L.C.P. RE: ARCHITECTURAL
	MANUAL OVERRIDE LIGHTING CONTROL SWITCH NOTE: SWITCH OVERRIDES P.L.C.P. LIGHTING CONTROL.

LIGHTING PLAN NOTES

LIGHTING REDUCTION CONTROLS (2009 IECC 502.2.2)
1. ALL HOME RUNS TO PANEL 'HV2' U.O.N.
2. ALL EXIT AND EMERGENCY LIGHTS TO CIRCUIT 'HV4-2'
3. MAX. CONTINUOUS LOADING OF 1920 VA PER 20A/1P/120V CIRCUIT
4. ALL HOME RUNS FOR LIGHTING DESIGNATED FOR DUSK-TO-DAWN OPERATION SHALL BE REGULATED BY PHOTOSENSOR. ALL OTHER EXTERIOR LIGHTING TO BE REGULATED BY PHOTOSENSOR AND TIME SWITCH.

LIGHTING CONTROLS PER IECC

LIGHTING REDUCTION CONTROLS (2009 IECC 502.2.2)
A. ALL LIGHTS IN STRUCTURE TO BE CONTROLLED BY A PROGRAMMABLE LIGHTING CONTROL PANEL (PCP) WITH AUTOMATIC SHUT-OFF, AS PER SECTION 502.2.2.
B. ALL REDUNDED AREAS, PER SECTION 505.2.2 TO BE SWITCHED BY OCCUPANCY SENSING DEVICES, AND THESE SENSORS TO BE CONTROLLED BY PROGRAMMABLE LIGHTING CONTROL PANEL. (RE: PLAN FOR LOCATION)
C. PROGRAMMABLE LIGHTING CONTROL PANEL MUST BE ABLE TO REDUCE ILLUMINATION PATTERN IN ALL REQUIRED SPACES BY A MINIMUM OF 50% AS PER SECTION 505.2.2)
D. OCCUPANCY SENSORS SHALL TURN LIGHTING OFF WITHIN 30 MINUTES OF AN OCCUPANT LEAVING A SPACE, AS PER SECTION 505.2.2.2

KEYED PLAN NOTES

(1) MANUAL OVERRIDE SWITCHES TO SERVE MAIN GARAGE AREA. VERIFY LOCATION WITH OWNER. EACH SWITCH SHALL CONTROL ALTERNATE ROWS OF LIGHTING TO ACHIEVE A UNIFORM, 50% REDUCTION IN ILLUMINATION PATTERN FOR THIS AREA.

PANEL LV2

MAINS AMPS: 125
MAINS TYPE: MCB
AIC RATING: 10000
NEMA RATING: I
VOLTS: 120/208
PHASE: 3
WIRE: 4
WIRE SIZE: 4#1 CU

NOTES:
1. ALL BRKS TO BE 20A/1P U.O.N.
2. BALANCE ALL LOADS
3. LABEL ALL CIRCUITS

CIRCUIT DESCRIPTION	VA LOAD	WIRE	BRKR			BRKR	WIRE	VA LOAD	CIRCUIT DESCRIPTION
SPACE				1	2		#12	180	ELEV. ROOM GFI
				3	4		#12	280	ELEV. PIT GFI & LTS.
				5	6		#12	180	WP GFI ON ROOF
				7	8		#12	540	3 REC. GENERATOR ROOM
				9	10		#12	180	ITEM #8
				11	12		#12	180	ITEM #8
				13	14		#12	1080	6 REC.
				15	16		#12	1080	6 REC.
				17	18		#12	1080	6 REC.
				19	20				
				21	22		#12	3000	ITEM #7
				23	24		#12	400	EXH. FANS
				25	26				SPACE
				27	28				
				29	30				
				31	32				
				33	34				
				35	36				
				37	38				
				39	40				
				41	42				

CONN. LOAD = 8180 x 1.25 = 10225 VA
AT 208V, 3ø --> 28 AMPS

—N—

PANEL CAPACITY IS 125 AMPS

PANEL HV4

MAINS AMPS: 225
MAINS TYPE: MCB
AIC RATING: 18000
NEMA RATING: I
VOLTS: 480/277
PHASE: 3
WIRE: 4
WIRE SIZE: 4#4/0 CU

NOTES:
1. ALL BRKS TO BE 20A/1P U.O.N.
2. BALANCE ALL LOADS
3. LABEL ALL CIRCUITS

CIRCUIT DESCRIPTION	VA LOAD	WIRE	BRKR			BRKR	WIRE	VA LOAD	CIRCUIT DESCRIPTION
				1	2				EXIT & EMERGENCY LTS.
RTU-13	15000	#10	30/3	3	4		#12	2592	LTS.
				5	6		#12	1782	LTS.
				7	8				
ELEVATOR	28220	#6	60/3	9	10	60/3	#6	7980	PANEL LV2
				11	12				
SPACE				13	14				SPACE
				15	16				
				17	18				
				19	20				
				21	22				
				23	24				
				25	26				
				27	28				
				29	30				
				31	32				
				33	34				
				35	36				
				37	38				
				39	40				
				41	42				

CONN. LOAD = 55,574 x 1.25 = 69,468 VA
AT 480V, 3ø --> 84 AMPS

—N—

PANEL CAPACITY IS 225 AMPS

PANEL HV2

MAINS AMPS: 400
MAINS TYPE: MLO
AIC RATING: 18000
NEMA RATING: I
VOLTS: 480/277
PHASE: 3
WIRE: 4
WIRE SIZE: 2#3/0 CU PER PHASE

NOTES:
1. ALL BRKS TO BE 20A/1P U.O.N.
2. BALANCE ALL LOADS
3. LABEL ALL CIRCUITS

CIRCUIT DESCRIPTION	VA LOAD	WIRE	BRKR			BRKR	WIRE	VA LOAD	CIRCUIT DESCRIPTION
				1	2				
RTU-10	20000	#10	30/3	3	4	50/3	#6	30000	RTU-6
				5	6				
				7	8				
RTU-11	20000	#10	30/3	9	10	20/3	#12	913	EXH. EXTRACTION (ITEM #2)
				11	12				
				13	14				
RTU-12	20000	#10	30/3	15	16	20/3	#12	6640	AIR COMP. (ITEM #1)
				17	18				
				19	20				SPACE
(ITEM #3)	12201	#12	20/3	21	22				
				23	24				
				25	26				
ITEMS #4,5,6 (6 OVH. DOORS)	5256	#12	20/3	27	28				
				29	30				
SPACE				31	32				
				33	34				
				35	36				
				37	38				
				39	40				
				41	42				

CONN. LOAD = 115,010 x 1.25 = 143,763 VA
AT 480V, 3ø --> 173 AMPS

—N—

PANEL CAPACITY IS 400 AMPS

PANEL LV

MAINS AMPS: 225
MAINS TYPE: MCB
AIC RATING: 10000
NEMA RATING: I
VOLTS: 120/208
PHASE: 3
WIRE: 4
WIRE SIZE: 4#4/0 CU

NOTES:
1. ALL BRKS TO BE 20A/1P U.O.N.
2. BALANCE ALL LOADS
3. LABEL ALL CIRCUITS

CIRCUIT DESCRIPTION	VA LOAD	WIRE	BRKR			BRKR	WIRE	VA LOAD	CIRCUIT DESCRIPTION
SPACE				1	2		#12	1080	6 WP GFI ON ROOF
				3	4		#12	1080	6 WP GFI ON ROOF
				5	6		#12	1080	6 RECEPTACLES
				7	8		#12	720	4 RECEPTACLES
				9	10		#12	1080	6 RECEPTACLES
				11	12		#12	1080	6 RECEPTACLES
				13	14				
				15	16		#12	360	2 RECEPTACLES
				17	18				
				19	20		#12	360	2 RECEPTACLES
				21	22		#12	360	2 RECEPTACLES
				23	24		#12	360	2 RECEPTACLES
				25	26		#12	540	3 RECEPTACLES
				27	28		#12	900	5 RECEPTACLES
				29	30		#12	1080	6 RECEPTACLES
				31	32		#12	1080	6 RECEPTACLES
				33	34		#12	1080	6 RECEPTACLES
				35	36		#12	1080	6 RECEPTACLES
				37	38		#12	1080	6 RECEPTACLES
				39	40		#12	1080	6 RECEPTACLES
				41	42		#12	180	1 RECEPTACLE
				43	44		#12	180	1 RECEPTACLE
				45	46		#12	360	2 RECEPTACLES
				47	48		#12	1080	6 RECEPTACLES
				49	50		#12	1080	6 RECEPTACLES
				51	52		#12	1080	6 RECEPTACLES
				53	54		#12	1080	6 RECEPTACLES
				55	56		#12	1080	6 RECEPTACLES
				57	58		#12	900	5 RECEPTACLES
				59	60		#12	1080	6 RECEPTACLES
				61	62		#12	1080	6 RECEPTACLES
				63	64		#12	180	1 RECEPTACLE
				65	66		#12	360	2 RECEPTACLES
				67	68		#12	400	EF X 2
				69	70		#12	900	5 RECEPTACLES
				71	72		#12	720	4 RECEPTACLES
				73	74		#12	900	5 RECEPTACLES
				75	76		#12	1080	6 RECEPTACLES
				77	78		#12	1080	6 RECEPTACLES
				79	80		#12	360	2 RECEPTACLES
				81	82				SPACE
				83	84				SPACE

CONN. LOAD = 29,920 x 1.25 = 37,400 VA
AT 208V, 3ø --> 104 AMPS

—N—

PANEL CAPACITY IS 225 AMPS

PANEL HV1

MAINS AMPS: 400
MAINS TYPE: MLO
AIC RATING: 18000
NEMA RATING: I
VOLTS: 480/277
PHASE: 3
WIRE: 4
WIRE SIZE: 2#3/0 CU PER PHASE

NOTES:
1. ALL BRKS TO BE 20A/1P U.O.N.
2. BALANCE ALL LOADS
3. LABEL ALL CIRCUITS

CIRCUIT DESCRIPTION	VA LOAD	WIRE	BRKR			BRKR	WIRE	VA LOAD	CIRCUIT DESCRIPTION
				1	2				
RTU-1	30000	#6	50/3	3	4	50/3	#6	30000	RTU-7
				5	6				
				7	8				
RTU-2	30000	#6	50/3	9	10	50/3	#6	30000	RTU-8
				11	12				
				13	14				
RTU-3	30000	#6	50/3	15	16	50/3	#6	30000	RTU-9
				17	18				
				19	20				SPACE
RTU-4	30000	#6	50/3	21	22				
				23	24				
				25	26				
RTU-5	30000	#6	50/3	27	28				
				29	30				
SPACE				31	32				
				33	34				
				35	36				
				37	38				
				39	40				
				41	42				

CONN. LOAD = 240,000 x 1.25 = 300,000 VA
AT 480V, 3ø --> 361 AMPS

—N—

PANEL CAPACITY IS 400 AMPS

PANEL HV3

MAINS AMPS: 200
MAINS TYPE: MLO
AIC RATING: 18000
NEMA RATING: I
VOLTS: 480/277
PHASE: 3
WIRE: 4
WIRE SIZE: 4#3/0 CU

NOTES:
1. ALL BRKS TO BE 20A/1P U.O.N.
2. BALANCE ALL LOADS
3. LABEL ALL CIRCUITS

CIRCUIT DESCRIPTION	VA LOAD	WIRE	BRKR			BRKR	WIRE	VA LOAD	CIRCUIT DESCRIPTION
WAREHOUSE LTS VIA PLCP	3888	#10	30/1	1	2		#10	2000	POLE LIGHTS VIA P.C. & T.C.
1ST FLOOR LTS VIA PLCP	3888	#10	30/1	3	4		#10	800	FLOOD LIGHTS VIA P.C. & T.C.
1ST FLOOR LTS VIA PLCP	3888	#10	30/1	5	6		#10	1100	FLOOD LIGHTS VIA P.C. & T.C.
1ST FLOOR LTS VIA PLCP	3888	#10	30/1	7	8				SPACE
1ST FLOOR LTS VIA PLCP	3888	#10	30/1	9	10				
1ST FLOOR LTS VIA PLCP	3888	#10	30/1	11	12				
1ST FLOOR LTS VIA PLCP	3888	#10	30/1	13	14				
1ST FLOOR LTS VIA PLCP	3888	#10	30/1	15	16				
1ST FLOOR LTS VIA PLCP	3888	#10	30/1	17	18				
1ST FLOOR LTS VIA PLCP	3888	#10	30/1	19	20				
1ST FLOOR LTS VIA PLCP	2754	#10	30/1	21	22				
1ST FLOOR LTS VIA PLCP	2592	#10	30/1	23	24				
2ND FLOOR LTS VIA PLCP	3564	#10	30/1	25	26				
2ND FLOOR LTS VIA PLCP	3564	#10	30/1	27	28				
2ND FLOOR LTS VIA PLCP	3410	#10	30/1	29	30				
2ND FLOOR LTS VIA PLCP	3564	#10	30/1	31	32				
SPACE				33	34				
				35	36				
				37	38				
				39	40				
				41	42				

CONN. LOAD = 62,220 x 1.25 = 77,775 VA
AT 480V, 3ø --> 94 AMPS

—N—

PANEL CAPACITY IS 200 AMPS

PANEL MDP

(WITH GROUND FAULT SENSOR)

MAINS AMPS: 1200
MAINS TYPE: MLO
AIC RATING: 100,000
NEMA RATING: I
VOLTS: 480/277
PHASE: 3
WIRE: 4
WIRE SIZE: 4#350 KCMIL PER PHASE

NOTES:
1. ALL BRKS TO BE 20A/1P U.O.N.
2. BALANCE ALL LOADS
3. LABEL ALL CIRCUITS

CIRCUIT DESCRIPTION	VA LOAD	WIRE	BRKR			BRKR	WIRE	VA LOAD	CIRCUIT DESCRIPTION
				1	2				
PANEL HV1	240000	2#3/0	400/3	3	4	100/3	#3	29920	PANEL LV
				5	6				
				7	8				
PANEL HV2	115010	2#3/0	400/3	9	10	225/3	#4/0	55574	PANEL HV4
				11	12				
				13	14				
PANEL HV3	62220	#3/0	200/3	15	16	125/3		8180	PANEL LV2
				17	18				
				19	20				
SPACE			200/3	21	22	200/3			SPACE
				23	24				
				25	26				
SPACE			100/3	27	28	100/3			SPACE
				29	30				

CONN. LOAD = 510,904 x 1.25 = 638,630 VA
AT 480V, 3ø --> 768 AMPS

—N—

PANEL CAPACITY IS 1200 AMPS

NOT TO SCALE

PANEL SCHEDULES (A)

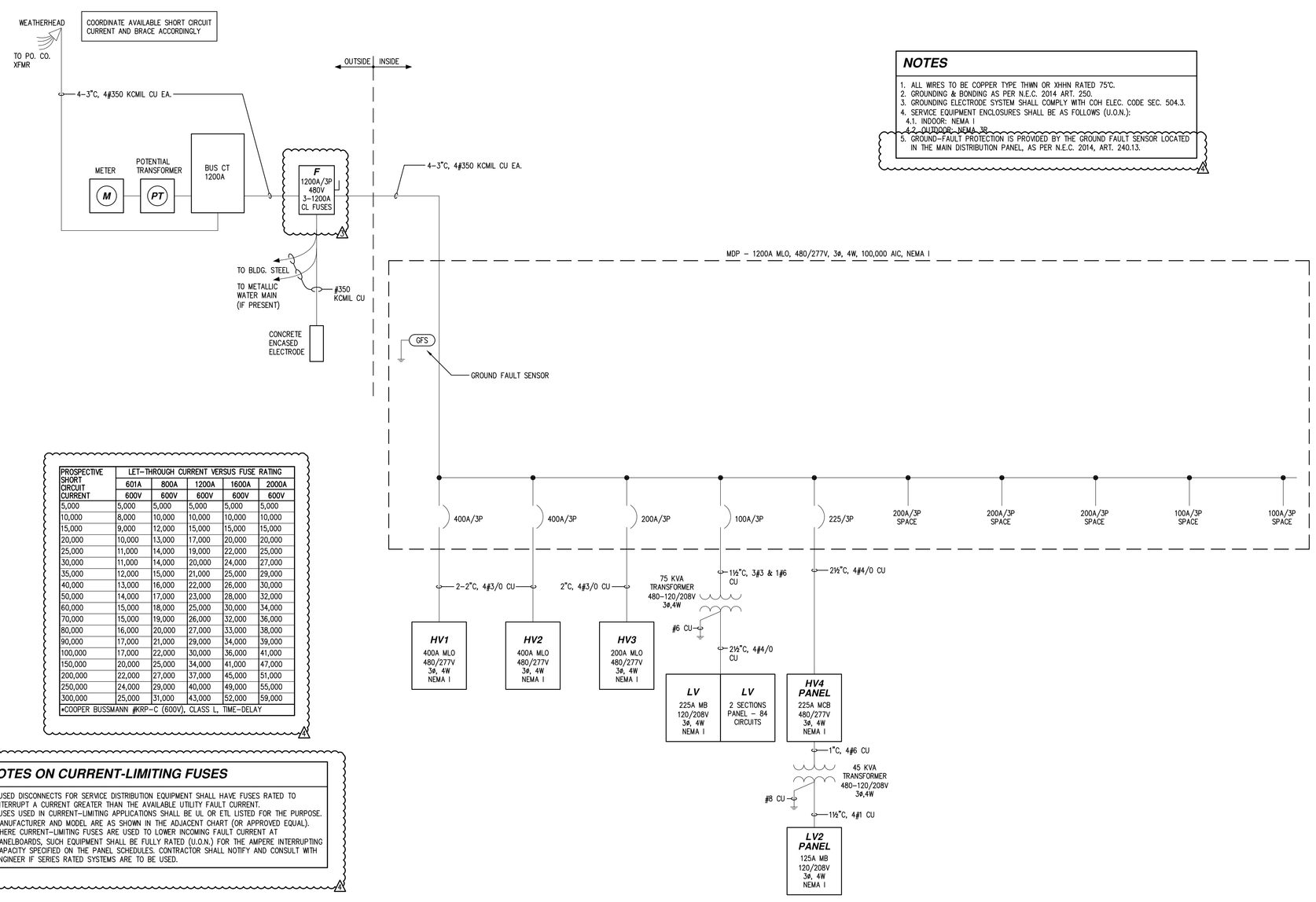

NOTES

1. ALL WIRES TO BE COPPER TYPE THWN OR XHHN RATED 75°C.
2. GROUNDING & BONDING AS PER N.E.C. 2014 ART. 250.
3. GROUNDING ELECTRODE SYSTEM SHALL COMPLY WITH COH ELEC. CODE SEC. 504.3.
4. SERVICE EQUIPMENT ENCLOSURES SHALL BE AS FOLLOWS (U.O.N.):
   4.1. INDOOR: NEMA I
   ~~4.2. OUTDOOR: NEMA 3R~~
5. GROUND-FAULT PROTECTION IS PROVIDED BY THE GROUND FAULT SENSOR LOCATED IN THE MAIN DISTRIBUTION PANEL, AS PER N.E.C. 2014, ART. 240.13.

PROSPECTIVE SHORT CIRCUIT CURRENT	LET-THROUGH CURRENT VERSUS FUSE RATING				
	601A	800A	1200A	1600A	2000A
	600V	600V	600V	600V	600V
5,000	5,000	5,000	5,000	5,000	5,000
10,000	8,000	10,000	10,000	10,000	10,000
15,000	9,000	12,000	15,000	15,000	15,000
20,000	10,000	13,000	17,000	20,000	20,000
25,000	11,000	14,000	19,000	22,000	25,000
30,000	11,000	14,000	20,000	24,000	27,000
35,000	12,000	15,000	21,000	25,000	29,000
40,000	13,000	16,000	22,000	26,000	30,000
50,000	14,000	17,000	23,000	28,000	32,000
60,000	15,000	18,000	25,000	30,000	34,000
70,000	15,000	19,000	26,000	32,000	36,000
80,000	16,000	20,000	27,000	33,000	38,000
90,000	17,000	21,000	29,000	34,000	39,000
100,000	17,000	22,000	30,000	36,000	41,000
150,000	20,000	25,000	34,000	41,000	47,000
200,000	22,000	27,000	37,000	45,000	51,000
250,000	24,000	29,000	40,000	49,000	55,000
300,000	25,000	31,000	43,000	52,000	59,000

•COOPER BUSSMANN #KRP-C (600V), CLASS L, TIME-DELAY

NOTES ON CURRENT-LIMITING FUSES

1. FUSED DISCONNECTS FOR SERVICE DISTRIBUTION EQUIPMENT SHALL HAVE FUSES RATED TO INTERRUPT A CURRENT GREATER THAN THE AVAILABLE UTILITY FAULT CURRENT.
2. FUSES USED IN CURRENT-LIMITING APPLICATIONS SHALL BE UL OR ETL LISTED FOR THE PURPOSE. MANUFACTURER AND MODEL ARE AS SHOWN IN THE ADJACENT CHART (OR APPROVED EQUAL).
3. WHERE CURRENT-LIMITING FUSES ARE USED TO LOWER INCOMING FAULT CURRENT AT PANELBOARDS, SUCH EQUIPMENT SHALL BE FULLY RATED (U.O.N.) FOR THE AMPERE INTERRUPTING CAPACITY SPECIFIED ON THE PANEL SCHEDULES. CONTRACTOR SHALL NOTIFY AND CONSULT WITH ENGINEER IF SERIES RATED SYSTEMS ARE TO BE USED.

NOT TO SCALE

ELECTRICAL RIGHT OF WAY RISER DIAGRAM (B)

POINT-TO-POINT METHOD SHORT-CIRCUIT CALCULATION

UTILITY POLE TRANSFORMER TO MDP

I: DETERMINE TRANSFORMER LET-THROUGH SHORT-CIRCUIT CURRENT
TRANSFORMER FLA = (KVA x 1000)/(E x 1.732) = TFL
TRANS. LET-THROUGH = (TFL x 100)/Z = TLC

II: DETERMINE FAULT CURRENT AT SERVICE EQUIPMENT (L-L)
CONDUCTOR F FACTOR = (1.732 x L x TLC)/(N x C x E) = F
COND. LET-THROUGH = TLC/(1+F) = CLC

KVA =
Z =
E = 480
L = 200
N = 4
C = 19,704

TFL =
TLC = 35,500
F = 0.325
CLC = 26,791 A

CONTRACTOR TO VERIFY UTILITY TRANSFORMERS AND AVAILABLE FAULT CURRENT

DATE OF CALCULATION: 09/04/14

NOTES:
1. TRANSFORMER KVA AND IMPEDENCE ARE ASSUMED VALUES FOR THE PURPOSE OF THIS CALCULATION. IF THE EQUIPMENT PROVIDED BY THE UTILITY DIFFERS FROM THESE VALUES, NOTIFY ENGINEER BEFORE POSTING FAULT CURRENT VALUE CALCULATED HERE.
2. A PERMANENTLY AFFIXED LABEL SHALL BE APPLIED TO SERVICE EQUIPMENT AT THE TIME OF INSTALLATION. THIS LABEL SHALL INCLUDE THE AVAILABLE FAULT CURRENT AND THE DATE OF THE CALCULATION AS PROVIDED ABOVE AND SHALL BE 2" X 3" IN SIZE WITH BLUE LETTERING ON A CONTRASTING BACKGROUND. COH ELECTRICAL CODE SEC. 504.1.1.

SHORT CIRCUIT CALCULATIONS (D)

ELECTRICAL LOAD ANALYSIS

1. LIGHTING LOAD
   1.1. NEC 220.12:
   A. GARAGE: 45,035 FT² X 1 X 1.25 = 56,294 VA
   B. 1ST FLOOR OFFICE: 3372 FT² X 3.5 X 1.25 = 14,753 VA
   C. 2ND FLOOR OFFICE: 8238 FT² X 3.5 X 1.25 = 36,041 VA
   D. TOTAL (A+B+C) = 107088 VA
   1.2. ACTUAL: 58320 X 1.25 = 72900 VA
   WE USED THE GREATER
2. EXTERIOR LIGHTING: 3900 VA X 1.25 = 4,875 VA
3. HVAC LOAD @ 100% = 355,600 VA
4. SHOP EQUIPMENT (NONCONTINUOUS) = 57,046 VA
5. RECEPTACLES: 116 X 180 = 20,880 VA
6. SIGN: 1,200 X 1.25 = 1,500 VA
7. EXISTING ELEVATOR = 30,000 VA
8. 25% OF LARGEST MOTOR = 5,000 VA
9. FUTURE OFFICE: 20,000 FT² X 3.5 X 1.25 = 87,500 VA

TOTAL = 669,489 VA

AT 480V, 3ø --> 805 AMPS
PROPOSED SERVICE CAPACITY IS 1200 AMPS

ELECTRICAL SERVICE LOAD ANALYSIS (C)

NOT TO SCALE

ELECTRICAL SPECIFICATIONS

1. CONTRACTOR SHALL VISIT THE SITE PRIOR TO BID DATE AND THOROUGHLY FAMILIARIZE HIMSELF WITH ALL EXISTING INSTALLATIONS. DETERMINE THE EXTENT OF THE NEW WORK TO PERFORM THIS CONTRACT. NO ALLOWANCES WILL BE MADE FOR FAILURE TO COMPLY WITH THIS REQUIREMENT OR LACK OF FAMILIARIZATION WITH EXISTING INSTALLATIONS.
2. ALL WORK SHALL COMPLY WITH THE LATEST EDITION OF THE NATIONAL ELECTRICAL CODE, LOCALLY ADOPTED BUILDING CODE, AND ALL APPLICABLE STATE AND LOCAL ORDINANCES.
3. ALL MATERIAL SHALL BE NEW, UNDAMAGED, AND UNBLEMISHED.
4. OBTAIN ALL PERMITS REQUIRED TO DO THIS WORK AND PAY ANY FEES REQUIRED FOR SUCH PERMITS.
5. ALL WORK SHALL BE GUARANTEED FOR A PERIOD OF ONE YEAR FROM THE TIME OF OWNER ACCEPTANCE. WORK OR EQUIPMENT FOUND TO BE SUBSTANDARD OR FAULTY SHALL BE CORRECTED DURING THESE PERIOD AT NO COST TO THE OWNER.
6. SEAL CONDUIT PENETRATIONS THROUGH WALLS WITH U.L.-LISTED FIRE RETARDENT SEALANT, SUCH AS CHASE FOAM CTC-PR855.
7. ALL WORK SHALL BE GROUNDED TO COMPLY WITHOUT EXCEPTION WITH ALL PROVISIONS OF ARTICLE 250 OF THE 2002 EDITION OF THE NATIONAL ELECTRICAL CODE. PROVIDE GREEN GROUND CONDUCTOR TO ALL RECEPTACLES.
8. PROVIDE TEMPORARY SERVICE AS REQUIRED FOR CONSTRUCTION POWER AND REMOVE SUCH TEMPORARY SERVICE WHEN WORK IS COMPLETE.
9. CONDUIT SHALL BE MINIMUM 1/2" RUN CONCEALED ABOVE CEILING IN FINISHED AREAS OF BUILDING. ALL CONDUIT SHALL BE U.L. LISTED PERPENDICULAR TO THE STRUCTURAL FEATURES OF THE BUILDING. CONTRACTOR MAY USE TYPE BX CABLE WITH GROUND WHERE CONCEALED IN THE WALLS AND WHEN PERMITTED BY APPLICABLE CODES AND BUILDING MANAGEMENT.
10. ALL WIRE SHALL BE COPPER. NO WIRE SMALLER THAN #12 FEEDER WIRE SHALL BE THW OR THWN INSULATED. FIXTURE WIRE SHALL BE TYPE PF. ALL WIRING SHALL BE COLOR CODED IN ACCORDANCE WITH THE LOCALLY ADOPTED BUILDING CODE. CONTROL WIRING, DATA CABLES, AND TELEPHONE WIRING SHALL BE TEFLON INSULATED OR AT CONTRACTORS OPTION SHALL BE RUN IN CONDUIT.
11. CIRCUITING: ALL BRANCH CIRCUIT WIRING SHALL BE #12 THHN/THWN OR TW EXCEPT WHERE OTHERWISE NOTED ON THE PLANS. GROUP HOMERUNS BACK TO PANELBOARDS NOT MORE THAN SIX PER CONDUIT UNLESS OTHERWISE NOTED ON THE PLANS. DO NOT TAP EXISTING DEDICATED CCTS.
12. WIRING DEVICES SHALL BE SPECIFICATION GRADE TO MATCH BUILDING STANDARD. COLORS SHALL BE AS SELECTED BY THE ARCHITECT. PROVIDE NYLON DEVICE PLATED OF THE COLORS SELECTED BY THE ARCHITECT.
13. CONTROLS: PROVIDE ALL CONTROL WIRING AND CONTROL CIRCUITS TO RENDER ALL HVAC EQUIPMENT INSTALLATIONS COMPLETE AND OPERABLE. ALL CONTROL WIRING SHALL BE PERFORMED IN ACCORDANCE WITH CONTROL WIRING DIAGRAMS FURNISHED BY THE MECHANICAL CONTRACTOR.
14. TELEPHONE & DATA OUTLETS: PROVIDE PLASTER RING WITH PULL STRING TO ABOVE LIFT OUT CEILING. PROVIDE BUSHED OPENING IN STUD PLATE(S). DEVICE PLATES SHALL BE FURNISHED BY THE TENANTS TELEPHONE & DATA CONTRACTOR(S).
15. LIGHTING FIXTURES: CONTRACTOR SHALL PROVIDE LIGHTING FIXTURES AS SPECIFIED ON THE PLANS. LL FIXTURES SHALL BE INSTALLED COMPLETE WITH LAMPS AS SPECIFIED ON THE PLANS.
16. CLEAN UP ALL DEBRIS AND REMOVE FROM JOB SITE ON COMPLETION OF WORK.
17. PROVIDE MOTION LIGHT SENSORS AND DOUBLE SWITCHING AS REQUIRED TO MEET THE AHJ ECC CODE.

GENERAL NOTES: ELECTRICAL SYSTEM

1. VERIFY EXACT REQUIREMENTS FOR ELECTRICAL EQUIPMENT WITH OWNER. IN THE CASE OF A DISCREPANCY BETWEEN THE ACTUAL SELECTION OF EQUIPMENT AND THESE DRAWINGS, ADVISE THE OWNER BEFORE WORK BEGINS.
2. ALL NEW ELECTRICAL MATERIAL AND EQUIPMENT TO BE U.L. LISTED.
3. ALL WIRES TO BE COPPER MIN. SIZE NO. 12 AWG TYPE THHN/THWN OR SIMILAR.
4. ALL DISC. SWS., STARTERS, CONTROLS, ETC. TO BE:
   A) FOR INDOORS IN NEMA I ENCLOSURE
   B) FOR OUTDOORS IN NEMA 3R ENCLOSURE
5. ALL CONNECTIONS TO HVAC AND PLUMBING MOTORS TO BE COORDINATED WITH THEIR SUBCONTRACTORS.
6. ALL 20A, 1P, 120V DUPLEX RECEPTACLES SERVING BATHROOM, KITCHEN, OUTDOORS, AND ROOFTOP TO HAVE GROUND FAULT CIRCUIT INTERRUPTER.
7. COORDINATE EXACT LOCATION OF LIGHT FIXTURES, SWITCHES, RECEPTACLES, ETC. WITH ARCH.
8. ALL NEW DUPLEX OUTLETS TO BE RATED 20A, 1P, 120V. U.O.N.
9. ALL SWITCHES TO BE RATED 20A, 1P, 277V.
10. ALL DIMMERS TO BE RATED 20A, 1P, 120V.
11. CONTRACTOR TO COMPLY WITH ARTICLE 300.7(A) OF THE N.E.C.
    SEALING: WHERE PORTIONS OF INTERIOR RACEWAY SYSTEM ARE EXPOSED TO WIDELY DIFFERENT TEMPERATURES, CIRCULATION OF AIR FROM WARMER TO A COOLER SECTION SHALL BE PREVENTED.
12. CONTRACTOR SHALL FURNISH A FILE SYSTEM FOR ALL EQUIPMENT AND MAINTENANCE OF EACH PIECE OF EQUIPMENT.
13. ALL ELECTRICAL CIRCUITS MUST BE CLEARLY MARKED AS TO WHAT EACH CONTROLS. CONTRACTOR SHALL FURNISH PHONE CONTACTS FOR WARRANTY SHOULD CONTRACTOR NOT BE LIABLE.

STATE OF TEXAS
MAGED I. RIFAAT
42314
03/20/15

GRAPHIC SCALE

ISSUE HISTORY / REVISIONS

DATE	ISSUED FOR	DATE	DESCRIPTION
	CLIENT REVIEW	12/12/14	△1 COH COMMENTS DATED 12/10/14
11/12/14	PERMIT	01/02/15	△2 MISC. OWNER REVISIONS
	BIDDING	02/05/15	△3 MISC. OWNER REVISIONS
	CONSTRUCTION	02/18/15	△4 C.O.H. COMMENTS DATED 02/16/15
	FINAL REVIEW	03/20/15	△5 MISC. OWNER REVISIONS

THE INTERFIELD GROUP
ARCHITECTURE / PLANNING | ENGINEERING
401 STUDEWOOD, SUITE 300
HOUSTON, TEXAS 77007
TEL. (713) 780-0909
TBPE REG. NO. F-5611
TBAE REG. NO. BR741

URBAN LIVING
PROPOSED RENOVATIONS
319 ST. EMANUEL STREET
HOUSTON, TX, 77002

ELECTRICAL NOTES & DETAILS

DRAWN BY: DLK
DATE: 08/11/14
CHECKED BY: MIR
PROJ. NO.: 14098.12
SHEET: E2.1 OF: 4