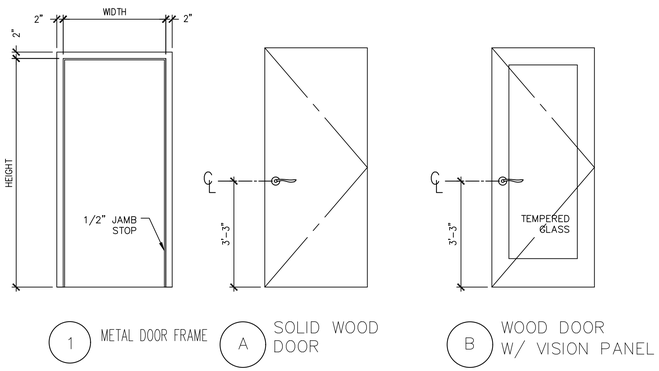

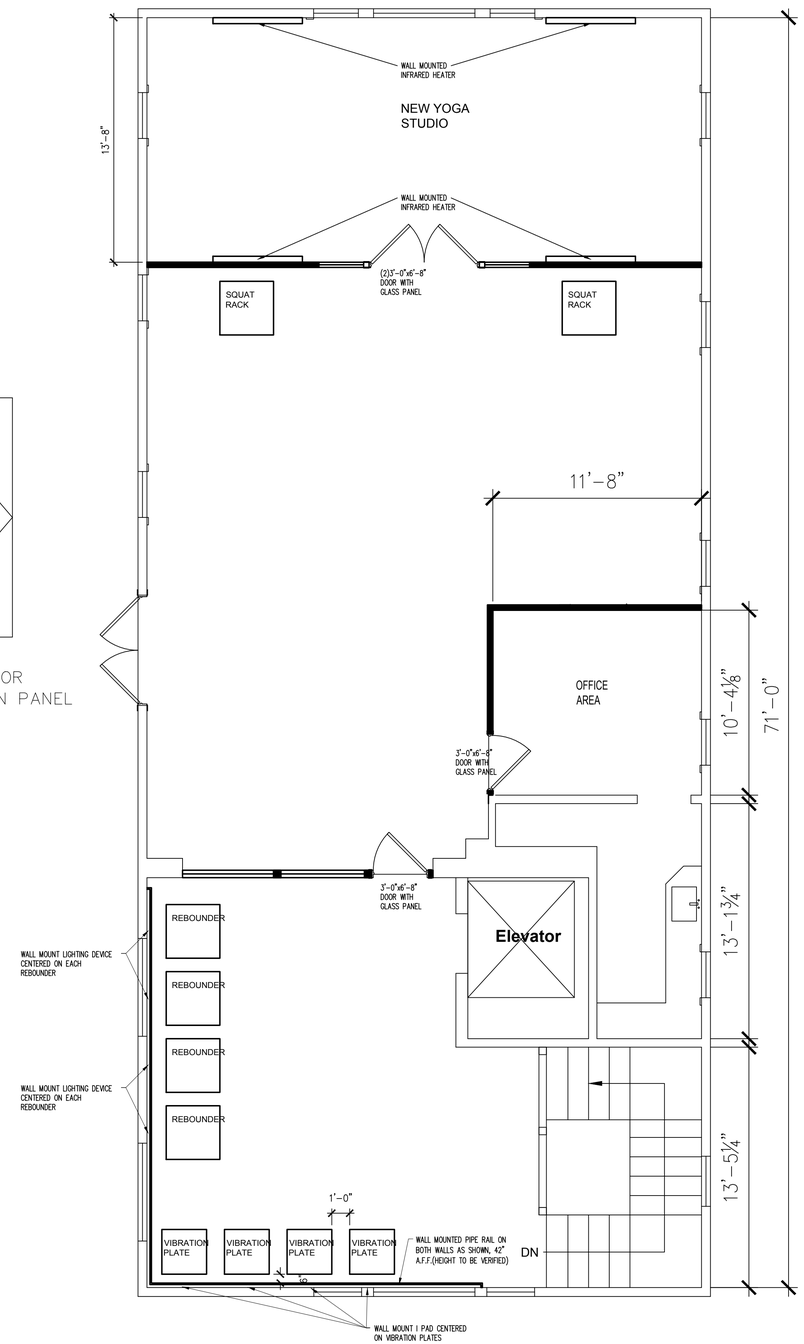

PROPOSED FIRST FLOOR PLAN

SCALE: 1/4"=1'-0"

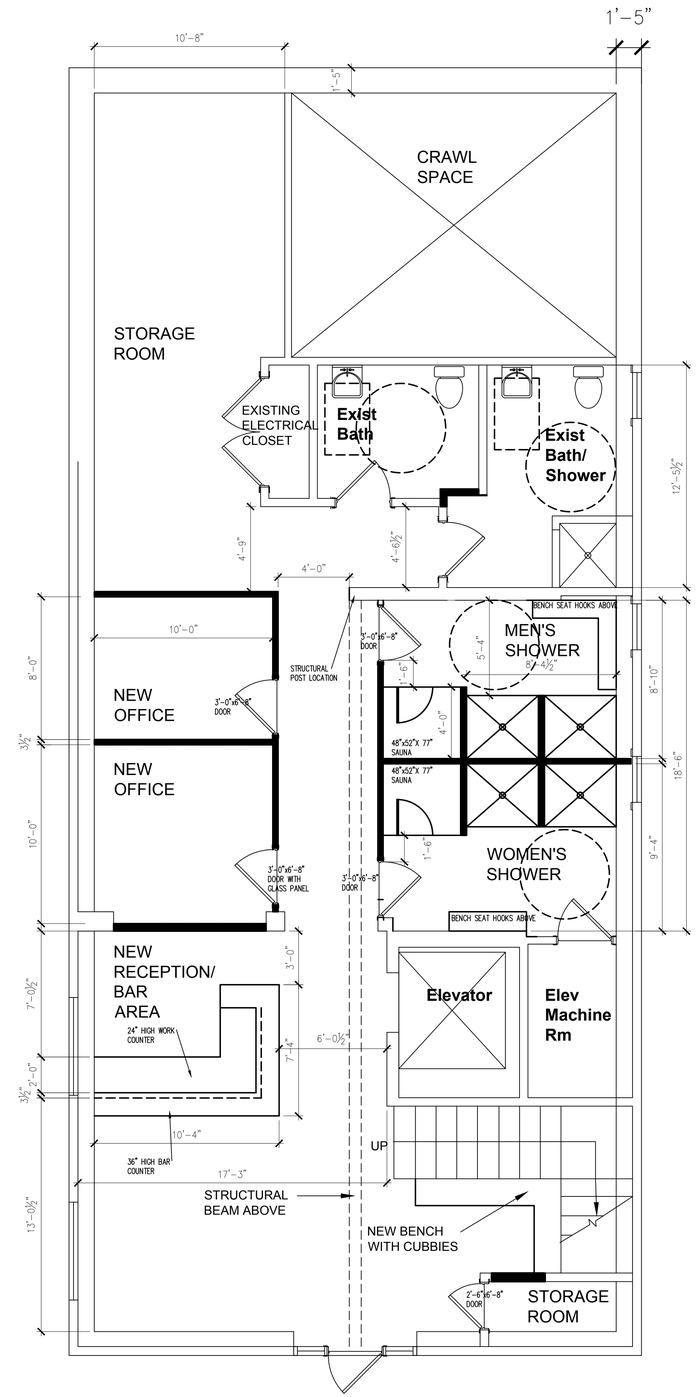

PROPOSED BASEMENT PLAN

SCALE: 1/4"=1'-0"

SYMBOLS LEGEND

EXISTING WALL/ CONSTRUCTION TO REMAIN

NEW WALL/ NEW CONSTRUCTION

REBILT
502 GRANITE AVE MILTON, MA

No.	Description	Date

ISSUED	Date
PERMIT SET	03.10.19

NEW PLANS AND DETAIL INFO

PERMIT PLANS

A-1

Scale: AS NOTED