GUMBEAUX, LLC
CHERRY PEAK OFFICE PARK, BUILDING 4B
Tenant Finish-Out
3503 Wild Cherry Road
Austin, TX 78738

CODES, REGULATIONS, STANDARDS, PERMITS, AND INSPECTIONS

1. The General Contractor is responsible for ensuring built compliance with all codes, regulations, and standards such as may be in force. The codes include, but may not be limited to:

   2015 International Building Code
   2015 International Energy Conservation Code
   2015 International Mechanical Code
   2014 National Electrical Code
   2015 International Fire Code
   2015 Uniform Plumbing Code
   Texas Accessibility Standard 2012

2. Should the General Contractor become aware of a condition indicated in the contract documents that would result in a violation of any code or regulation listed above, the General Contractor shall contact the Architect immediately for resolution.

3. The General Contractor shall be responsible for obtaining any permit not provided beforehand by the Owner.

4. The General Contractor and/or his/her subcontractor shall be responsible for coordinating all required inspections.

5. To the extent required by the City of Lakeway or other applicable AHJ, the General Contractor shall commission a third party inspector.

6. Neither the Architect nor the Owner shall be considered to act in the role of an Inspector. While the Owner and the Architect shall endeavor to alert the General Contractor to any perceived or observed defect in the construction, failure to do so shall not in any way relieve the General Contractor from his/her obligation to ensure that the built work is safe, of good quality, and compliant with all relevant codes and regulations.

7. The General Contractor is responsible for ensuring that all work, whether performed by subcontractors or by the General Contractor him/herself, is of good workmanship and quality.

GENERAL NOTES

1. These documents comprise a portion of a contract between the Owner and the General Contractor. No contract is implied or stated between the Owner and any other party, not between the Architect and any party.

2. The General Contractor may not modify the plans, elevations, site plan, or any drawings in these contract documents without obtaining Architect consultation and Owner approval beforehand.

3. Should the Owner request a change to the contract documents, the General Contractor is responsible for ensuring that the change does not result in a built condition that does not comply with codes and/or regulations. Consultation with the Architect and/or an inspector is highly recommended.

4. The Owner shall not be held liable nor be made to pay for the remediation of work judged substandard and/or rejected by the Architect, Owner and/or any inspector (municipal or third-party). The Owner alone reserves the right to accept work judged substandard by either the Architect or the Owner. Should the Owner elect to accept substandard work, the Owner reserves the right to request monetary credit and/or a reduction in the contract sum.

5. The Owner and/or the Architect shall be permitted to access the project site, in part and as a whole, at any reasonable time without prior notice. If the project site, in whole or in part, is locked or is otherwise secured, the Architect shall coordinate with the General Contractor to gain access.

6. The General Contractor is solely responsible for obtaining and maintaining all such bonding, sureties and insurances as may be required to shield the Owner from claims pertaining to the General Contractor's and/or Subcontractor's execution of the Work and their respective conduct onsite.

7. The General Contractor is solely responsible for ensuring that working conditions onsite are safe and comply with all relevant rules, laws, codes, and standards. Likewise, the General Contractor is solely responsible for ensuring that all personnel onsite conduct themselves in a safe and prudent manner at all times, whether or not the General Contractor is present.

INDEX OF DRAWINGS

PROJECT DESCRIPTION

OFFICE OCCUPANCY, GROUP B
2,027 SF Tenant Finish-out

Calculated Occupant Load = 30 Total Occupants

Please refer to Sheet A0.1 for Code Plan and additional information

OWNER
SUSAN HUVAL
AUSTIN, TEXAS

ARCHITECT
ASCENSION ARCHITECTURE, PLLC
P.O. BOX 340781
LAKEWAY, TX 78734
512.657.8946

Contact: Brandi McDaniel, AIA
brandi@ascensionarch.com

MECHANICAL, ELECTRICAL, PLUMBING ENGINEER
X5 ENGINEERING
P.O. BOX 91743
AUSTIN, TX 78709
512.815.2959

Contact: Michael Sestak, P.E.
msestak@x5eng.com

ASCENSION ARCHITECTURE
P.O. Box 340781
Austin, Texas 78734
512.657.8946
www.ascensionarch.com

GUMBEAUX, LLC
CHERRY PEAK OFFICE PARK, BUILDING 4B
3503 WILD CHERRY ROAD, AUSTIN, TEXAS 78738

INTERIM FOR REVIEW ONLY

THIS DOCUMENT IS INCOMPLETE AND CANNOT BE USED FOR REGULATORY APPROVAL, PERMITTING, BIDDING OR CONSTRUCTION.
ARCHITECT: BRANDI McDANIEL
ARCHITECT REG. NO: 18329

7/28/2020

PROJECT NO.	20.03.00
DATE	7/28/2020
DRAWN BY:	bbm
REVISIONS:	

COVER SHEET
CVR

CHERRY PEAK OFFICE PARK BUILDING 4B
GUMBEAUX BUSINESS OFFICE

Address: 3503 Wild Cherry Road, Austin, TX 78738
Proposed Use: General Office

General Project Description:
Gross Leasable Area: 2,027 SF

Chapter 1 – Administration / Applicable Codes
Accessibility Standards: Texas Accessibility Standard 2012
Applicable Codes:
2015 International Building Code
2015 International Energy Conservation Code
2015 International Mechanical Code
2015 International Fire Code
2014 National Electrical Code
2015 Uniform Plumbing Code

This report references specific building code references from the International Building Code and the Uniform Plumbing Code

Chapter 3 – Use and Occupancy Classification
Classification: (Section 303) Business, Group B

303.2 Business Group B occupancy includes among others, the use of a building or a portion thereof, for office, professional or service-type transactions, including storage of records and accounts. Business occupancies shall include, but not be limited to, the following:
…
Professional services (architects, attorneys, dentists, physicians, engineers, etc.)
…

Chapter 5 – General Building Heights and Areas
Existing Building = Type VB Nonsprinklered

Chapter 6 – Types of Construction
Table 601 Fire-Resistance Rating Requirements for Building Elements (Hrs) for Type VB

Structural Frame	0 hr
Bearing walls	0 hr
Interior Nonbearing Walls	0 hr
Floor Construction	0 hr
Roof Construction	0 hr

Chapter 8 – Interior Finishes
Section 803.1.1 Interior wall and ceiling finish materials shall be classified in accordance with ASTM E84 or UL 723.
Class A: Flame Spread index 0-25; smoke-developed index 0-450
Class B: Flame Spread index 26-75; smoke-developed index 0-450
Class C: Flame Spread index 76-200; smoke-developed index 0-450

Per Table 803.11 for Group B Occupancy, Nonsprinklered:
Class A: exit passageways
Class B: corridors
Class C: rooms and enclosed areas

Chapter 10 Means of Egress
General Means of Egress:
Minimum Ceiling Height allowed: 7'-6"
Protruding objects are permitted to extend below minimum ceiling height provided a minimum headroom of 80" is provided.

Floor Area Allowance per Occupant (Table 1004.1.2):

Business **100 gross**
Assembly without fixed seats, Unconcentrated (tables and chairs) for Conference Room **15 gross**

Total Occupants yielded in current plan : 30 OCCUPANTS

See plan for calculations.

Egress Width per Occupant: 0.2 inch per occupant (1005.3.2)
Total egress width required based on occupant load = 6.0 inches
(30 occupants X 0.2 inches/occupant = 6.0 inches)

Total egress width proposed and provided = 38
Front door: 1 door at 38 inches each (clear width) = 38 inches

Number of Exits:
Two exits or exit access doorways from any space shall be provided where the design occupant load or the common path of egress travel distance exceeds the values listed in Table 1006.2.1. Table 1006.2.1 indicates maximum occupant load for one exit is 49, and maximum travel distance is 100 feet.
1 exit required
1 exit provided

Exit travel distance shall not exceed 250 ft in buildings equipped with Sprinkler System, **200 ft in buildings WITHOUT a Sprinkler System** (Table 1017.2)
Travel distance shall be measured from the most remote point within a story along the natural and unobstructed path of horizontal and vertical egress travel to the entrance to an exit.

(The longest travel distance calculated in the proposed plan is 68'-3"+/-.)

Minimum Corridor Width: 44 inches (Section 1024.2)
Dead End Corridor Length: When more than one exit access is required, dead end corridor maximum is 20 feet (per 1020.4)

Corridors:
Fire Resistance Rating per Table 1020.1
Exception 4. A fire resistance is not required for corridors in an occupancy in Group B that is a space requiring only a single means of egress complying with Section 1006.2.

Plumbing fixtures required per 2015 Uniform Plumbing Code
Total calculated occupant load = 30
30 total occupants yields 15 male, 15 female

PER Section 422.2 Separate Facilities, Exception 3: In Business occupancies...with a total occupant load of 50 or less including customers and employees, one toilet facility, designed for use by no more than one person at a time, shall be permitted for use by both sexes.

Water closets
Unisex: **1 required water closet, 2 provided**

Lavatories
Unisex: **1 required lavatory, 2 provided**

Drinking Fountains
1 per 150
30 yields **1 required**

Per 415.2 Drinking Fountain Alternatives. Drinking fountains shall not be required for an occupant load of 30 or less.

Service Sink
1 required
1 provided

END OF REPORT

CODE REPORT
1/4" = 1'-0"

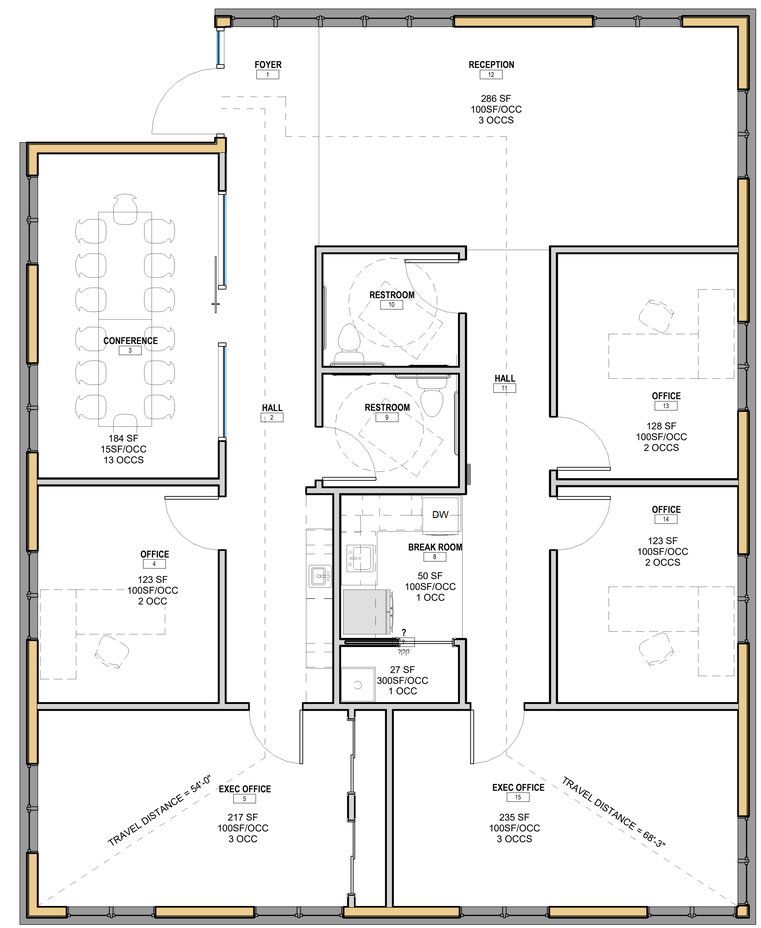

30 TOTAL OCCUPANTS

1 CODE PLAN
1/4" = 1'-0"

ASCENSION ARCHITECTURE
P.O. Box 340781
Austin, Texas 78734
512.657.8946
www.ascensionarch.com

GUMBEAUX, LLC
CHERRY PEAK OFFICE PARK, BUILDING 4B
3503 WILD CHERRY ROAD, AUSTIN, TEXAS 78738

INTERIM FOR REVIEW ONLY

THIS DOCUMENT IS INCOMPLETE AND CANNOT BE USED FOR REGULATORY APPROVAL, PERMITTING, BIDDING OR CONSTRUCTION.
ARCHITECT: BRANDI McDANIEL
ARCHITECT REG. NO: 18329

7/28/2020

PROJECT NO.	20.03.00
DATE	7/28/2020
DRAWN BY:	bbm
REVISIONS:	

CODE PLAN
A0.1

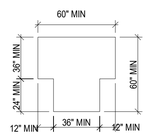

Figure 304.3.2
T-shaped turning space

Figure 305.3
Clear floor or ground space

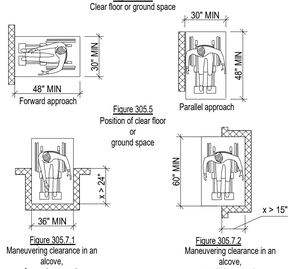

Figure 305.5
Position of clear floor or ground space

Figure 305.7.1
Maneuvering clearance in an alcove, forward approach

Figure 305.7.2
Maneuvering clearance in an alcove, parallel approach

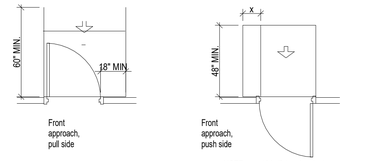

(a)
FRONT APPROACHES SWING DOORS

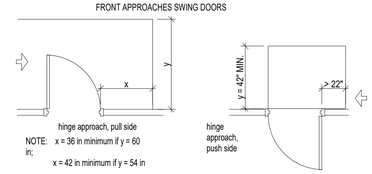

(b)
HINGE SIDE APPROACHED SWINGING DOORS

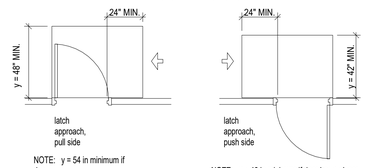

(c)
LATCH SIDE APPROACHES - SWINGING DOORS

NOTE: all doors in alcoves or recesses shall comply with the clearance for front approaches, per 404.2.4.3

Figure 404.2.4.1
Maneuvering clearances at manual swinging doors and gates

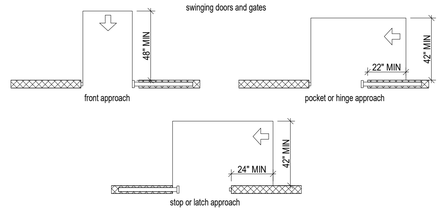

Figure 404.2.4.2
Maneuvering clearances at doorways without doors, sliding doors, gates, and folding doors

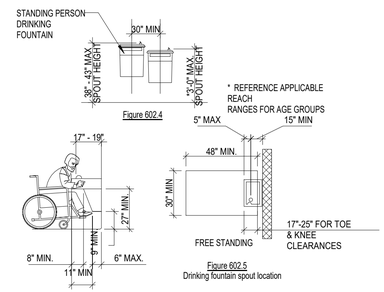

Figure 602.5
Drinking fountain spout location

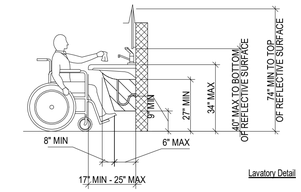

Lavatory Detail

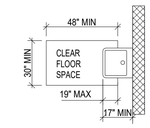

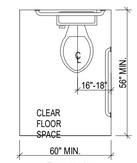

Figure 604.3.1
Clear Floor Space at Water Closets

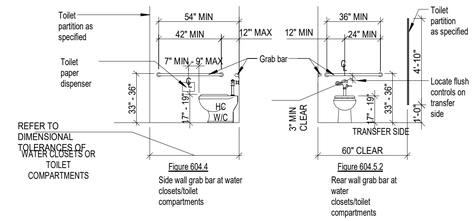

Figure 604.4
Side wall grab bar at water closets/toilet compartments

Figure 604.5.2
Rear wall grab bar at water closets/toilet compartments

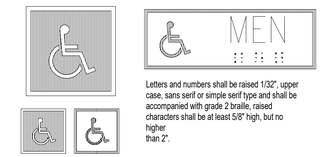

Figure 703.7.2.1
International Symbol of Accessibility

Letters and numbers shall be raised 1/32", upper case, sans serif or simple serif type and shall be accompanied with grade 2 braille, raised characters shall be at least 5/8" high, but no higher than 2".

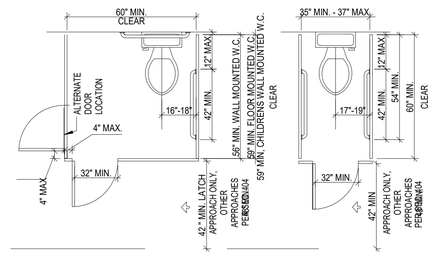

Figure 604.8.1.2
Wheelchair accessible toilet compartment (Side Wall)

Figure 604.8.2
Ambulatory accessible toilet compartments

CLEARANCES INDICATED ARE MINIMUM REQUIREMENTS FOR ACCESSIBILITY.
REFER TO TOILET ROOMS AND LAVATORY DETAILS FOR MOUNTING HEIGHTS.

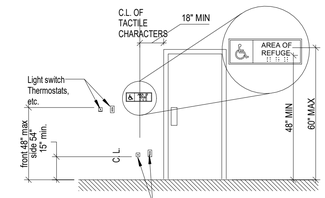

Figure 703.4.1
Height of tactile characters above finish floor or ground

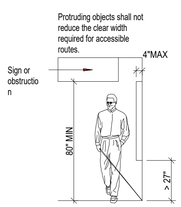

Figure 307.2
Limits of protruding objects

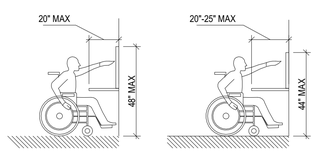

Figure 308.2.2
Obstructed high forward reach

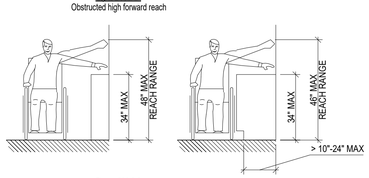

Figure 308.3.2
Obstructed high side reach

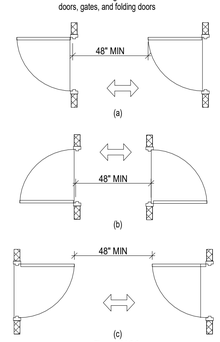

Figure 404.2.6
Doors in series and gates in series

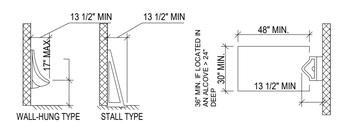

Figure 605.2
Height and depth of urinals

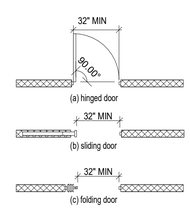

Figure 404.2.3
Clear width at doorways

THE FOLLOWING SECTION OF DETAILS PROVIDES INFORMATION ON REQUIREMENTS FOR DISABLED ACCESSIBILITY. THE REQUIREMENTS COMBINE MINIMUM REQUIREMENTS OF STATE AND FEDERAL AGENCIES. THE PURPOSE OF THIS SECTION IS TO HELP AVOID INSTALLATION OF MATERIALS ON CONSTRUCTION PROJECTS THAT WOULD LIMIT ACCESSIBILITY. THE SCOPE OF THIS SECTION IS LIMITED AND THE INDIVIDUALS WORKING ON THE PROJECT SHOULD FAMILIARIZE THEMSELVES WITH TEXAS ACCESSIBILITY STANDARD (TAS) AND AMERICAN WITH DISABILITIES ACT ACCESSIBILITY GUIDELINES (ADAAG) FOR ADDITIONAL INFORMATION AND REQUIREMENTS. COPIES OF THESE DOCUMENTS MAY BE OBTAINED BY CONTACTING THE FOLLOWING:

TAS:
TEXAS DEPT. OF LICENSING & REGULATION
P.O. BOX 12157
AUSTIN, TEXAS 78711
(800) 803-9202
TDD (800) 735-2989
www.license.state.tx.us

ADAAG:
SOUTHWEST DISABILITY AND BUSINESS TECHNICAL ASSISTANCE CENTER FOR REGION VI.
2323 S. SHEPERD, SUITE 1000
HOUSTON, TEXAS 77019
ADA HOTLINE: (800) 949-4232
TDD: (713) 520-5136
(713) 520-0232
FAX: (713) 520-5785

IN THE EVENT THE INFORMATION ON THE PLAN SHEETS DOES NOT MEET THE MINIMUM REQUIREMENTS OF THE SECTION, THEN THE INFORMATION SHALL BE PRESENTED TO THE ARCHITECT FOR CLARIFICATION PRIOR TO CONSTRUCTION OF SPECIFIC AREA OF WORK.

ELIMINATION OF ARCHITECTURAL BARRIERS
UNIFORM FEDERAL ACCESSIBILITY STANDARDS (ADA)

In accordance with accessibility requirements, the following standards shall be included when bidding on projects involving renovation of or new facilities for public accommodation or commercial facilities. Any items not conforming to these or any other standards, codes, or ordinances shall be brought to the attention of the project architect for his interpretation. In the event the information listed in this document conflicts with any portion of the work described in the Contract Documents, the contractor shall notify the architect, in writing, of his need for a solution to resolve the conflict. The mounting heights indicated are for items that require accessibility by disabled individuals. Where two or more items are grouped in one area (mirrors, sinks, toilets, drinking fountains, urinals, shelves, telephones, etc.) not all items in the area have to be mounted at handicap height.
Contractor to coordinate these installation heights with other materials for neat, trimmed out and finished appearance. Items for disabled individual use shall be mounted at height indicated for age level as noted.

1 ACCESSIBILITY GUIDELINES
1/4" = 1'-0"

ASCENSION ARCHITECTURE
P.O. Box 340781
Austin, Texas 78734
512.657.8946
www.ascensionarch.com

GUMBEAUX, LLC

CHERRY PEAK OFFICE PARK, BUILDING 4B
3503 WILD CHERRY ROAD, AUSTIN, TEXAS 78738

INTERIM FOR REVIEW ONLY

THIS DOCUMENT IS INCOMPLETE AND CANNOT BE USED FOR REGULATORY APPROVAL, PERMITTING, BIDDING OR CONSTRUCTION.
ARCHITECT: BRANDI McDANIEL
ARCHITECT REG. NO: 18329

7/28/2020

PROJECT NO.	20.03.00
DATE	7/28/2020
DRAWN BY:	bbm
REVISIONS:	

ACCESSIBILITY GUIDELINES
A0.2

NOTE: REFER TO ELECTRICAL PLANS & LIGHT FIXTURE SCHEDULE FOR FIXTURE SPECIFICATIONS, TYP.

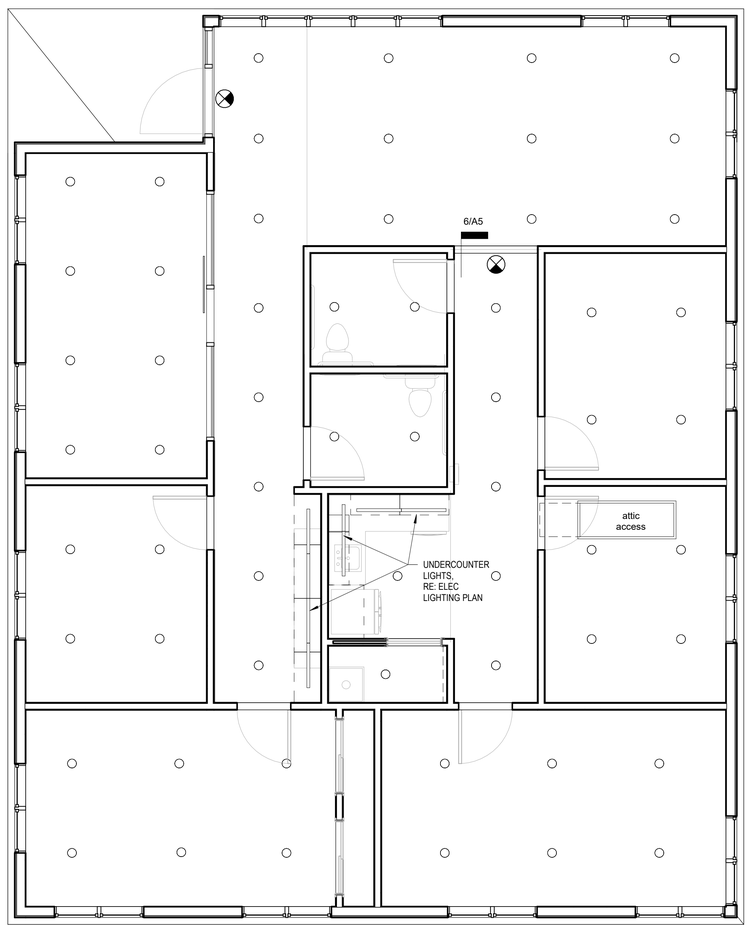

2 REFLECTED CEILING PLAN
1/4" = 1'-0"

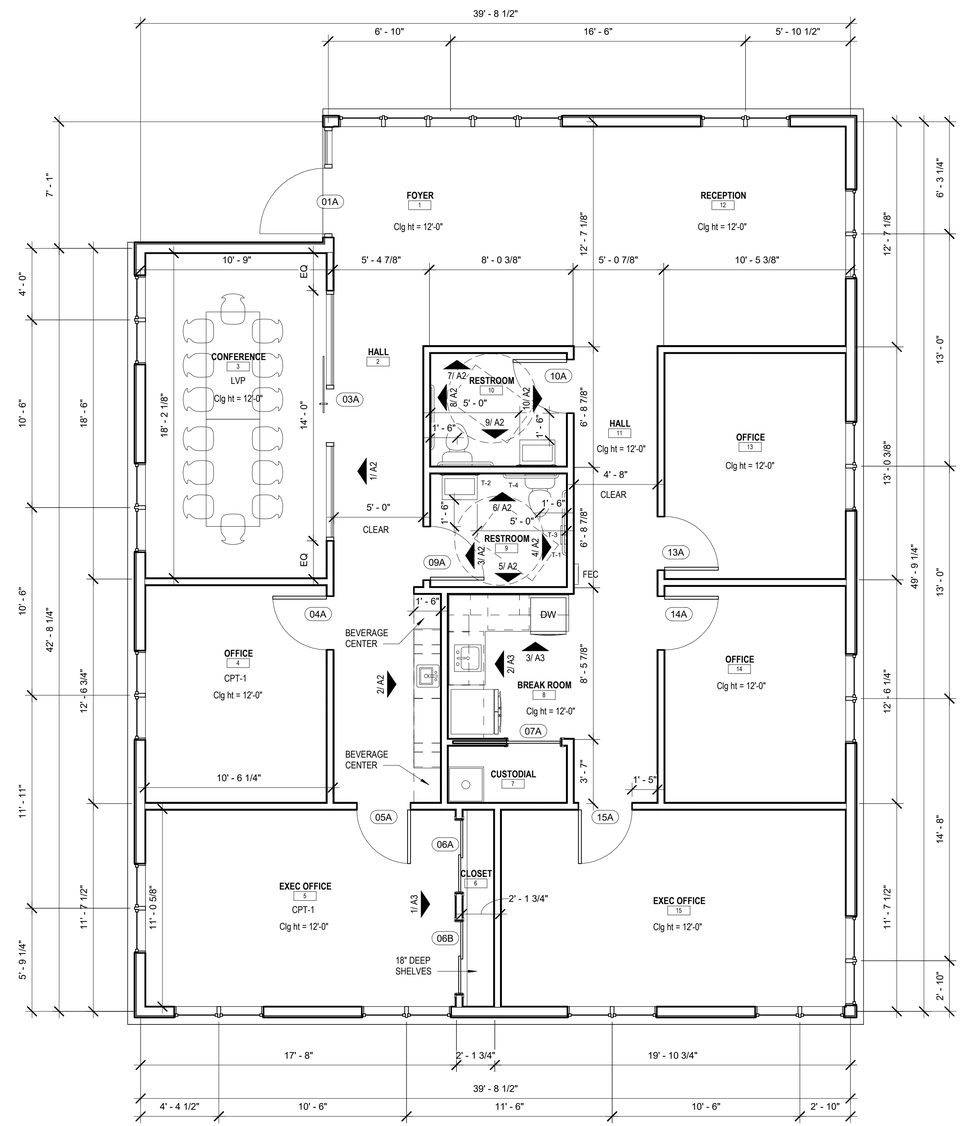

1 FLOOR PLAN
1/4" = 1'-0"

ASCENSION
ARCHITECTURE

P.O. Box 340781
Austin, Texas 78734
512.657.8946

www.ascensionarch.com

GUMBEAUX, LLC

CHERRY PEAK OFFICE PARK, BUILDING 4B
3503 WILD CHERRY ROAD, AUSTIN, TEXAS 78738

INTERIM FOR REVIEW ONLY

THIS DOCUMENT IS INCOMPLETE AND CANNOT BE USED FOR REGULATORY APPROVAL, PERMITTING, BIDDING OR CONSTRUCTION.
ARCHITECT: BRANDI McDANIEL
ARCHITECT REG. NO: 18329

7/28/2020

PROJECT NO.	20.03.00
DATE	7/28/2020
DRAWN BY:	bbm
REVISIONS:	

FLOOR PLAN
A1

NOTES:
1. PROVIDE AND INSTALL 1X4 PTD WOOD FRAME BEHIND MIRRORS OR OTHER WALL-MOUNTED EQUIPMENT AS REQUIRED TO FLUSH ITEMS OUT WITH TILE /GYP BD WALL SURFACES.
2. PROVIDE AND INSTALL UNDERCOUNTER LIGHTING PER ELEC LIGHTING PLAN.

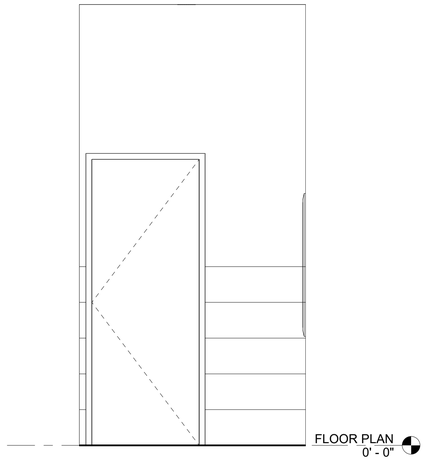

10 INT ELEV - RR10 ENTRY WALL
1/2" = 1'-0"

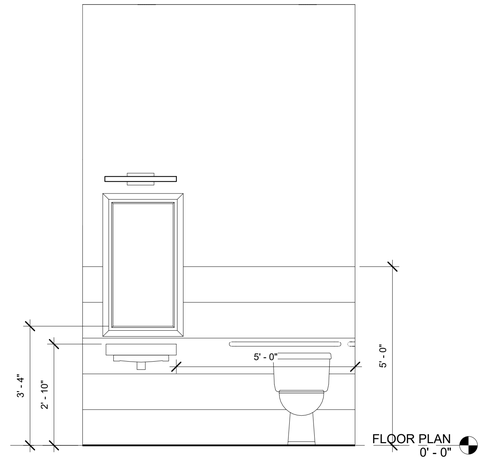

9 INT ELEV - RR10 WET WALL
1/2" = 1'-0"

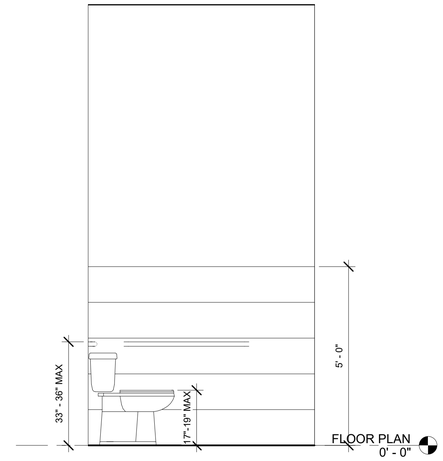

8 INT ELEV - RR10 SIDE WALL
1/2" = 1'-0"

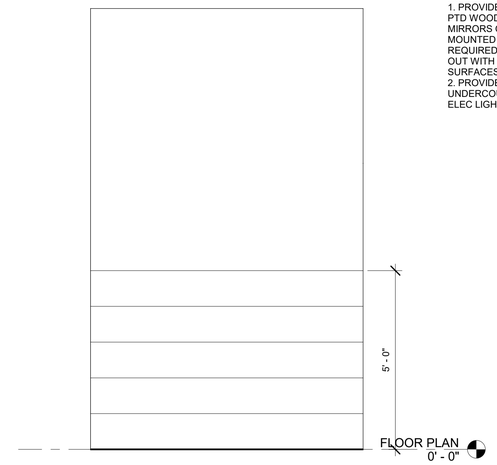

7 INT ELEV - RR10 TILE WALL
1/2" = 1'-0"

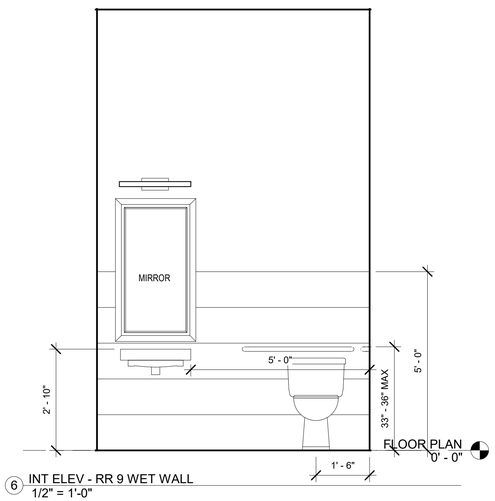

6 INT ELEV - RR 9 WET WALL
1/2" = 1'-0"

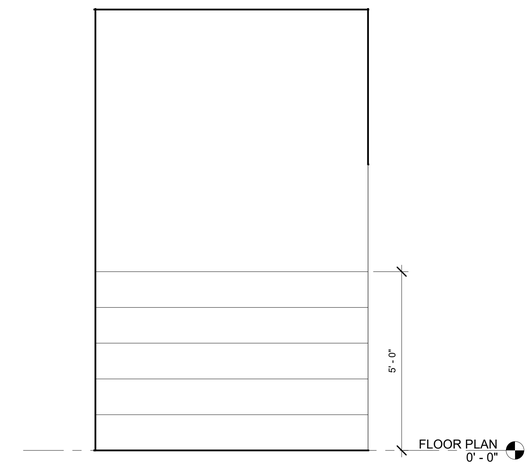

5 INT ELEV - RR9 TILE WALL
1/2" = 1'-0"

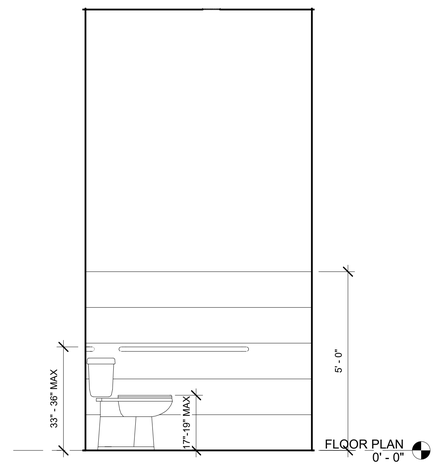

4 INT ELEV - RR9 SIDE WALL
1/2" = 1'-0"

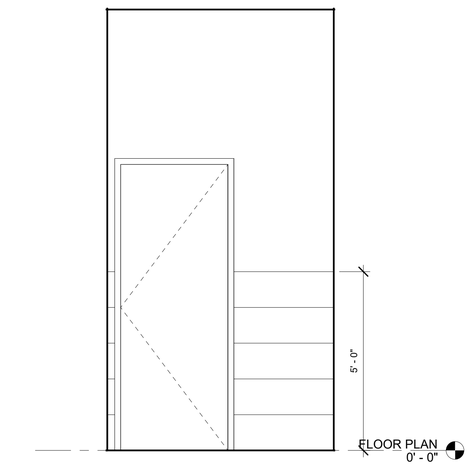

3 INT ELEV - RR9 ENTRY WALL
1/2" = 1'-0"

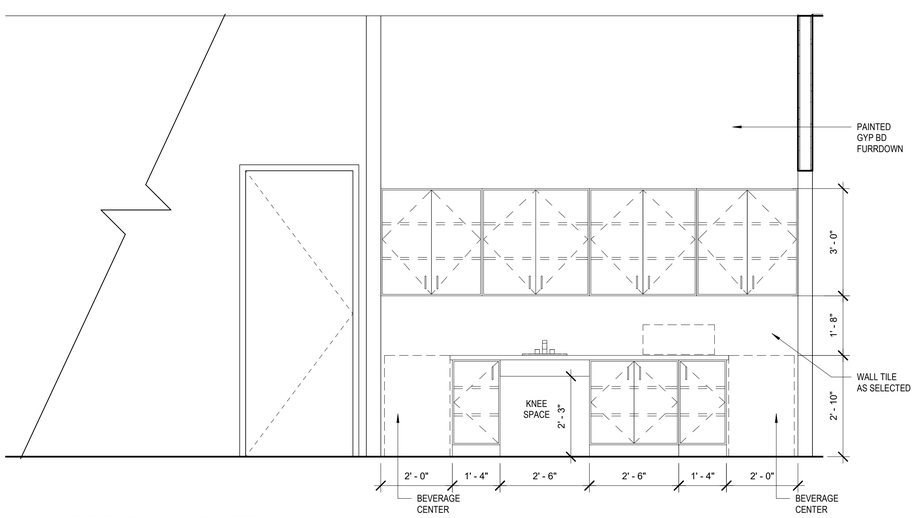

2 INT ELEV - CORRIDOR COUNTER
1/2" = 1'-0"

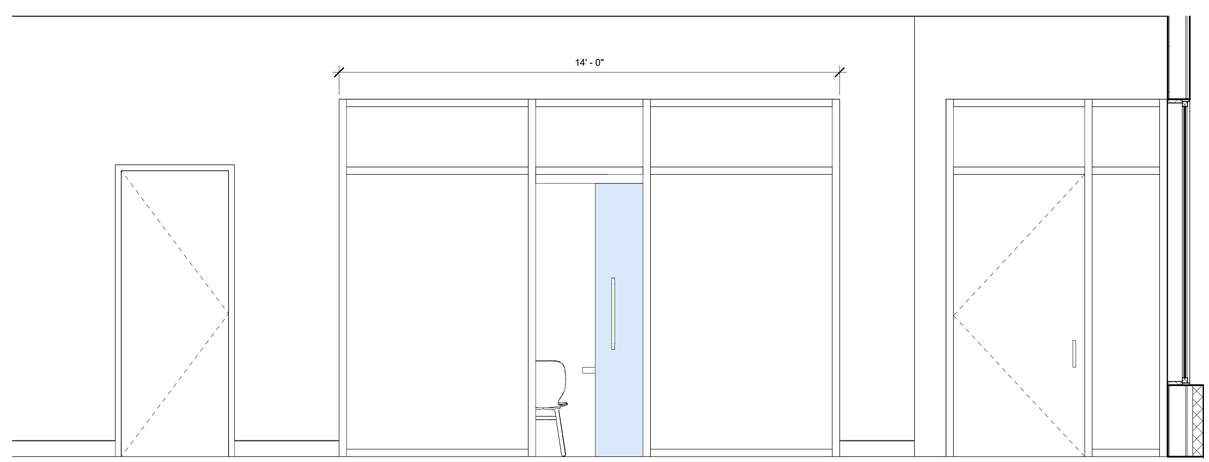

1 INT ELEV - CONF CORRIDOR
1/2" = 1'-0"

ASCENSION
ARCHITECTURE

P.O. Box 340781
Austin, Texas 78734
512.657.8946

www.ascensionarch.com

GUMBEAUX, LLC

CHERRY PEAK OFFICE PARK, BUILDING 4B
3503 WILD CHERRY ROAD, AUSTIN, TEXAS 78738

INTERIM FOR REVIEW ONLY

THIS DOCUMENT IS INCOMPLETE AND CANNOT BE USED FOR REGULATORY APPROVAL, PERMITTING, BIDDING OR CONSTRUCTION.
ARCHITECT: BRANDI McDANIEL
ARCHITECT REG. NO: 18329

7/28/2020

PROJECT NO.	20.03.00
DATE	7/28/2020
DRAWN BY:	bbm
REVISIONS:	

INT ELEVATIONS
A2

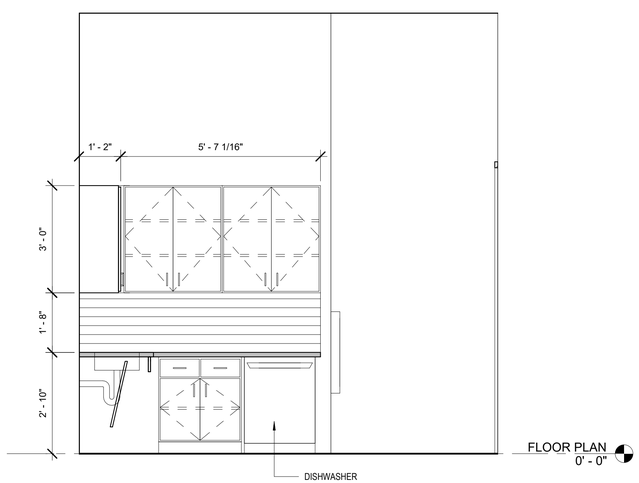

3 INT ELEV - BREAK ROOM SIDE WALL
1/2" = 1'-0"

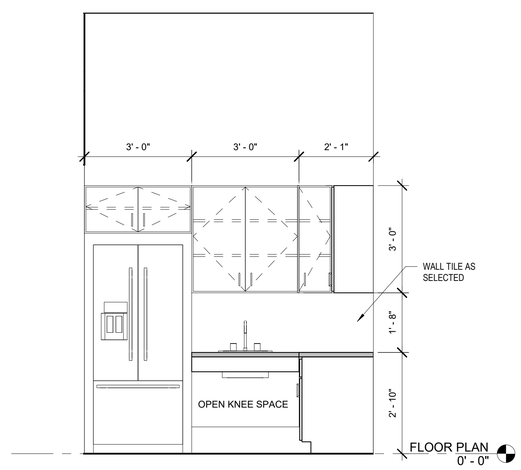

2 INT ELEV - BREAK ROOM SINK WALL
1/2" = 1'-0"

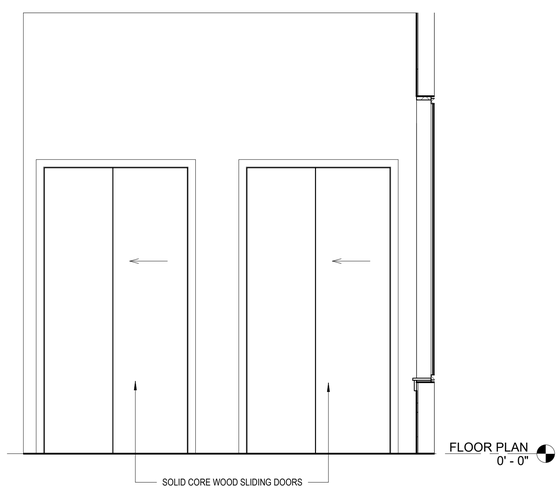

1 INT ELEV - EXEC OFFICE 5 CLOSET
1/2" = 1'-0"

ASCENSION
ARCHITECTURE

P.O. Box 340781
Austin, Texas 78734
512.657.8946

www.ascensionarch.com

GUMBEAUX, LLC

CHERRY PEAK OFFICE PARK, BUILDING 4B
3503 WILD CHERRY ROAD, AUSTIN, TEXAS 78738

INTERIM FOR REVIEW ONLY

THIS DOCUMENT IS INCOMPLETE AND CANNOT BE USED FOR REGULATORY APPROVAL, PERMITTING, BIDDING OR CONSTRUCTION.
ARCHITECT: BRANDI McDANIEL
ARCHITECT REG. NO: 18329

7/28/2020

PROJECT NO.	20.03.00
DATE	7/28/2020
DRAWN BY:	bbm
REVISIONS:	

INT ELEVATIONS
A3

DOOR SCHEDULE

TAG	WIDTH	HEIGHT	ROOM	FIRE RATING	NOTES	HARDWARE
01A	3'-6"	8'-0"	EXTERIOR		EXISTING BUILDING DOOR	KEYED LOCKSET
03A	3'-0"	8'-0"	CONFERENCE	--	GLASS SLIDER IN INTERIOR GLASS SYSTEM	PASSAGE LEVER
04A	3'-0"	8'-0"	OFFICE	--	SCWD (STAINED) W/VISION PANEL IN TIMELY PREFINISHED STL FRAME	OFFICE LOCKSET
05A	3'-0"	8'-0"	OFFICE	--	SCWD (STAINED) W/VISION PANEL IN TIMELY PREFINISHED STL FRAME	OFFICE LOCKSET
06A	4'-0"	8'-0"	CLOSET	--	SCWD (STAINED) TWO PANEL SLIDING DOOR	PASSAGE LEVER
06B	4'-0"	8'-0"	CLOSET	--	SCWD (STAINED) TWO PANEL SLIDING DOOR	PASSAGE LEVER
07A	3'-0"	8'-0"	CUSTODIAL	--	SCWD (STAINED) POCKET DOOR	PASSAGE LEVER
09A	3'-0"	8'-0"	RESTROOM	--	SCWD (STAINED) IN TIMELY PREFINISHED STL FRAME	PRIVACY LOCKSET
10A	3'-0"	8'-0"	RESTROOM	--	SCWD (STAINED) IN TIMELY PREFINISHED STL FRAME	PRIVACY LOCKSET
13A	3'-0"	8'-0"	OFFICE	--	SCWD (STAINED) W/VISION PANEL IN TIMELY PREFINISHED STL FRAME	OFFICE LOCKSET
14A	3'-0"	8'-0"	OFFICE	--	SCWD (STAINED) W/VISION PANEL IN TIMELY PREFINISHED STL FRAME	OFFICE LOCKSET
15A	3'-0"	8'-0"	OFFICE	--	SCWD (STAINED) W/VISION PANEL IN TIMELY PREFINISHED STL FRAME	OFFICE LOCKSET

DOORS & FRAMES

DOORS: SOLID CORE WOOD DOORS, 1 3/4" THICK, STAIN FINISH (STAIN COLOR TO BE SELECTED)
FRAMES: TIMELY CLASSIC S-SERIES , TA-8, FOR ALL 4 7/8" WALLS, 20 GA., COLOR BROWNTONE, SC101

HARDWARE

DOOR HARDWARE: PROVIDE AND INSTALL 1 1/2 PR BUTTS EACH DOOR WITH LEVER EQUAL TO KWIKSET MILAN LEVER, SIGNATURE SERIES, COLOR POLISHED CHROME, MODEL #156MIL SQT SMT 26. PROVIDE LOCKSETS WHERE SCHEDULED.

NOTES:
1. SHEETROCK RETURNS AT WINDOWS, NO WOOD TRIM AT SILL OR APRON REQUIRED.

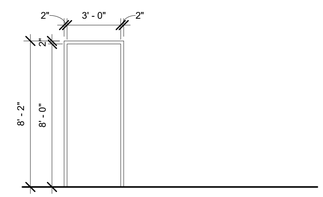

FRAME TYPE 1

TIMELY PREFINISHED
STEEL FRAME - NONRATED

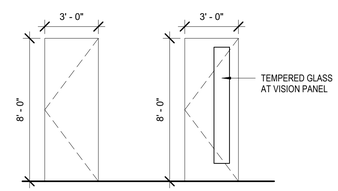

DOOR TYPE A

SOLID CORE WOOD,
STAIN FINISH

DOOR TYPE B

SOLID CORE WOOD,
STAIN FINISH, TEMPERED
GLASS

1 DOOR / FRAME TYPES
1/4" = 1'-0"

FINISH SCHEDULE

TAG	ROOM	FLOOR	BASE	WALLS				CEILING	CLG HT	NOTES
				NORTH	EAST	SOUTH	WEST			
1	FOYER	SC	WOOD	PT	PT	PT	PT	GYP-PT	12'-0"	
2	HALL	SC	WOOD	PT	PT	PT	PT	GYP-PT	12'-0"	
3	CONFERENCE	SC	WOOD	PT	PT	PT	PT	GYP-PT	12'-0"	GLASS ENTRANCE
4	OFFICE	SC	WOOD	PT	PT	PT	PT	GYP-PT	12'-0"	
5	EXECUTIVE OFFICE	SC	WOOD	PT	PT	PT	PT	GYP-PT	12'-0"	
6	CLOSET	SC	WOOD	PT	PT	PT	PT	GYP-PT	12'-0"	
7	CUSTODIAL	TILE	TILE	PT	PT	PT	PT	GYP-PT	12'-0"	FRP AT MOP SINK WALLS
8	BREAK ROOM	SC	WOOD	PT	PT	PT	PT	GYP-PT	12'-0"	TILE AT BACKSPLASH
9	RESTROOM	SC	WOOD	TILE / PT	TILE / PT	TILE / PT	TILE / PT	GYP-PT	12'-0"	5'-0" TILE WAINSCOT WITH PT ABOVE
10	RESTROOM	TILE	TILE	TILE / PT	TILE / PT	TILE / PT	TILE / PT	GYP-PT	12'-0"	5'-0" TILE WAINSCOT WITH PT ABOVE
11	HALL	SC	WOOD	PT	PT	PT	PT	GYP-PT	12'-0"	
12	RECEPTION	SC	WOOD	PT	PT	PT	PT	GYP-PT	12'-0"	
13	OFFICE	SC	WOOD	PT	PT	PT	PT	GYP-PT	12'-0"	
14	OFFICE	SC	WOOD	PT	PT	PT	PT	GYP-PT	12'-0"	
15	EXECUTIVE OFFICE	SC	WOOD	PT	PT	PT	PT	GYP-PT	12'-0"	

FINISH SCHEDULE LEGEND

FLOORS:
TILE-FL PORCELAIN FLOOR TILE, TO BE SELECTED
SC CONCRETE, STAINED AND SEALED

BASE:
TILE TILE BASE TO BE SELECTED
WOOD 6" WOOD, PAINTED

CEILINGS:
GYP-PT PAINTED GYPSUM BOARD CEILING

WALLS:
PT-1 PAINTED GYPSUM WALLBOARD, FIELD COLOR
PT-2 PAINTED GYPSUM WALLBOARD, RESTROOM WALL COLOR (ABOVE TILE WAINSCOT)
TILE WALL TILE (REFER TO INTERIOR ELEVATIONS FOR EXTENTS OF TILE AND TILE PATTERN, TYP.)
WALL TILE 1 (RESTROOMS): WAINSCOT TO 5'-0" AFF MIN, TILE TO BE SELECTED
WALL TILE 2 (BREAK ROOM): BACKSPLASH, TILE TO BE SELECTED

MILLWORK:
CUSTOM CASEWORK 18" DEEP LOWERS, 14" DEEP UPPERS (AT HALL 2), STAIN GRADE
COUNTERTOPS: QUARTZ, SQUARE EDGE, EQUAL TO MSI, GRADE 1

FIXTURES AND EQUIPMENT SCHEDULE

REFRIGERATOR: BY TENANT
DISHWASHER: BOSCH 800 SERIES 24" WIDE RECESSED HANDLE SPECIAL APPLICATION, MODEL #SGE68X55UC, 815mm H (32 inches)
FIRE EXTINGUISHER: EQUAL TO LARSEN MULTI-PURPOSE DRY CHEMICAL, MP10, UL RATING: 2A-10B:C
FIRE EXTINGUISHER CABINET: EQUAL TO LARSEN ARCHITECTURAL SERIES, AL-2409-R3, FULL PANEL, BLACK DIE CUT LETTERING, ALUMINUM TRIM AND DOOR MATERIAL, 2-1/2" ROLLED EDGE SEMI-RECESSED
WINDOW COVERINGS: BY OWNER
ATTIC ACCESS LADDER: LOUISVILLE LADDER, EVEREST SERIES, ALUMINUM ATTIC LADDER, AL228P, ROUGH OPENING 22.5" x 63"
ROOM IDENTIFICATION SIGNS: AT RESTROOMS, WITH UNIVERSAL SYMBOL OF ACCESSIBILITY & BRAILLE PER TAS

REFER TO PLUMBING FIXTURE SCHEDULE, SHEET P0.1 FOR BALANCE OF FIXTURES AND EQUIPMENT

TOILET ACCESSORIES SCHEDULE

T-1 42" WALL MOUNTED GRAB BAR, EQUAL TO BOBRICK B-6806 SERIES
T-2 36" WALL MOUNTED GRAB BAR, EQUAL TO BOBRICK B-6806 SERIES
T-3 TOILET PAPER DISPENSER, EQUAL TO (2) 6-IN DIAMETER ROLLS
T-4 MIRROR, 24" x 36", CLEAR GLASS MIRROR
T-5 MOP HANGER, EQUAL TO MUSTEE #65.600 (REFER TO PLUMBING SCHEDULE)

ASCENSION ARCHITECTURE
P.O. Box 340781
Austin, Texas 78734
512.657.8946
www.ascensionarch.com

GUMBEAUX, LLC
CHERRY PEAK OFFICE PARK, BUILDING 4B
3503 WILD CHERRY ROAD, AUSTIN, TEXAS 78738

INTERIM FOR REVIEW ONLY

THIS DOCUMENT IS INCOMPLETE AND CANNOT BE USED FOR REGULATORY APPROVAL, PERMITTING, BIDDING OR CONSTRUCTION.
ARCHITECT: BRANDI McDANIEL
ARCHITECT REG. NO: 18329

7/28/2020

PROJECT NO. 20.03.00
DATE 7/28/2020
DRAWN BY: Author
REVISIONS:

SCHEDULES
A4

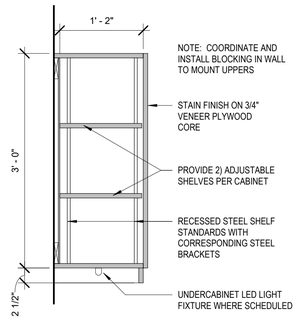

12 UPPER CABINET DETAIL
1" = 1'-0"

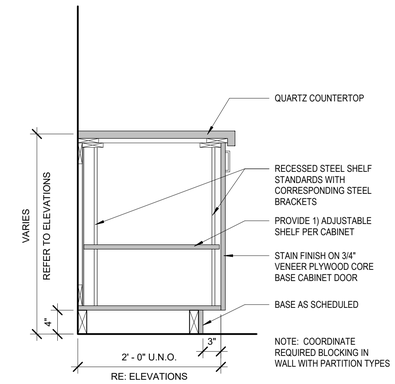

11 BASE CABINET DETAIL - NO DRAWERS
1" = 1'-0"

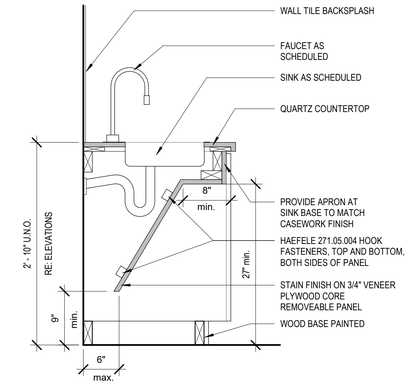

10 SINK BASE CABINET DETAIL
1" = 1'-0"

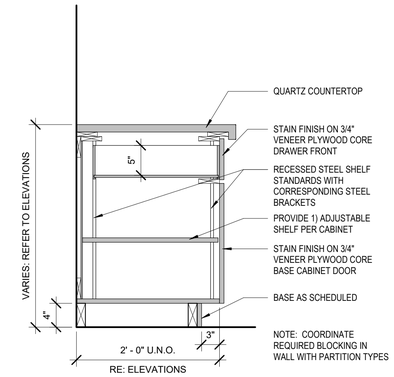

9 CABINET DETAIL
1" = 1'-0"

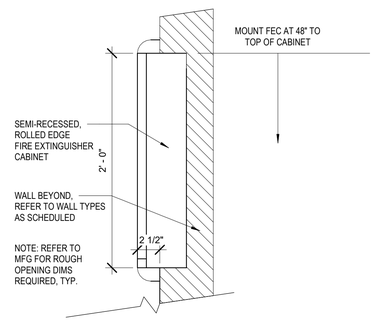

8 FIRE EXTINGUISHER CABINET
1 1/2" = 1'-0"

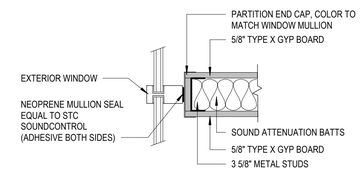

7 ENDWALL DETAIL AT MULLION
1 1/2" = 1'-0"

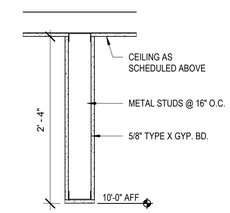

6 METAL STUD FURRDOWN
1" = 1'-0"

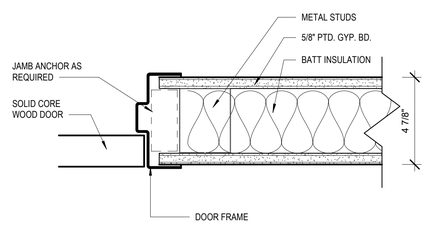

4 DOOR JAMB DETAIL
3" = 1'-0"

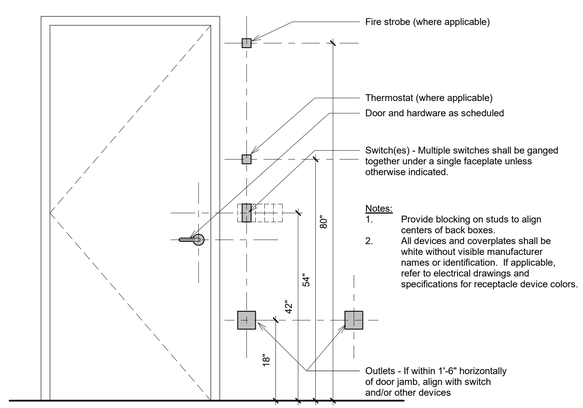

5 TYPICAL ALIGNMENTS
3/4" = 1'-0"

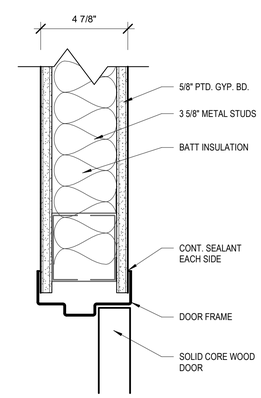

3 DOOR HEAD DETAIL
3" = 1'-0"

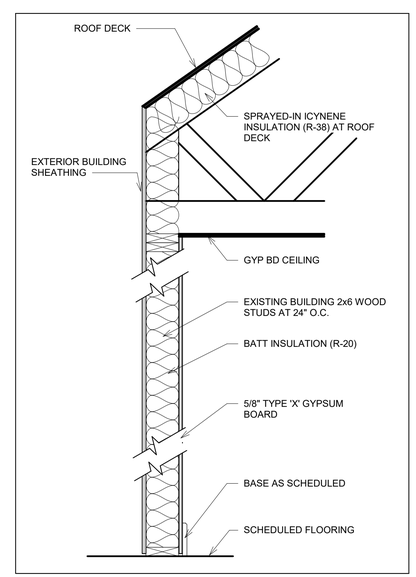

2 BUILDING INSULATION DETAIL
1" = 1'-0"

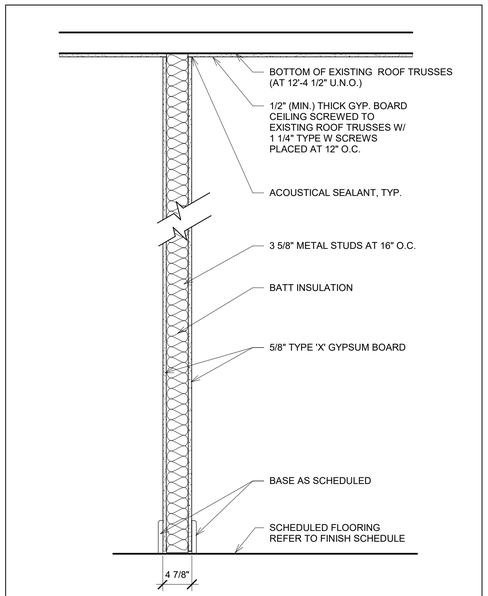

S1	METAL STUD NON-RATED WALL
1" = 1'-0"	RATING: NO FIRE RATING

1 PARTITION TYPES
1" = 1'-0"

ASCENSION ARCHITECTURE
P.O. Box 340781
Austin, Texas 78734
512.657.8946
www.ascensionarch.com

GUMBEAUX, LLC

CHERRY PEAK OFFICE PARK, BUILDING 4B
3503 WILD CHERRY ROAD, AUSTIN, TEXAS 78738

INTERIM FOR REVIEW ONLY

THIS DOCUMENT IS INCOMPLETE AND CANNOT BE USED FOR REGULATORY APPROVAL, PERMITTING, BIDDING OR CONSTRUCTION.
ARCHITECT: BRANDI McDANIEL
ARCHITECT REG. NO: 18329

7/28/2020

PROJECT NO.	20.03.00
DATE	7/28/2020
DRAWN BY:	bbm
REVISIONS:	

DETAILS
A5

HVAC GENERAL PROVISIONS

IT IS THE INTENT OF THE CONTRACT DOCUMENTS TO PROVIDE AN INSTALLATION COMPLETE IN EVERY RESPECT. IN THE EVENT THAT ADDITIONAL DETAILS OF SPECIAL CONSTRUCTION MAY BE REQUIRED FOR WORK INDICATED OR SPECIFIED IN THIS SECTION OR WORK SPECIFIED IN OTHER SECTIONS, IT SHALL BE THE RESPONSIBILITY OF THE CONTRACTOR TO PROVIDE SAME AS WELL AS TO PROVIDE MATERIAL AND EQUIPMENT USUALLY FURNISHED WITH SUCH SYSTEMS OR REQUIRED TO COMPLETE THE INSTALLATION, WHETHER MENTIONED OR NOT.

FURNISH AND INSTALL ALL NECESSARY EQUIPMENT AND DEVICES NECESSARY TO PROVIDE A FUNCTIONING SYSTEM. ELEMENT OF THE WORK TO INCLUDE BUT NOT LIMITED TO MATERIALS, LABOR, TRANSPORTATION, SUPPLIES, EQUIPMENT, HOISTING RIGGING, STORAGE, UTILITIES AND ALL REQUIRED PERMITS, LICENSES AND INSPECTIONS.

ALL WORK TO COMPLY WITH THE APPLICABLE CODES IN EFFECT AT TIME OF BIDDING. WORK TO BE IN STRICT ACCORDANCE WITH THE 2015 INTERNATIONAL MECHANICAL CODE, 2014 NATIONAL ELECTRICAL CODE, 2015 INTERNATIONAL ENERGY EFFICIENCY CODE, STATE, NATIONAL AND LOCAL CODES AND STANDARDS. MODIFICATIONS TO THE CONTRACT DOCUMENTS REQUIRED BY THE AUTHORITY HAVING JURISDICTION SHALL BE DONE AT NO COST TO THE OWNER. WHERE THE CONTRACT DOCUMENTS ARE IN EXCESS OF CODE REQUIREMENTS, THE CONTRACT DOCUMENTS SHALL GOVERN. WHERE THE CODES ARE IN EXCESS OF CONTRACT DOCUMENTS, THE CODES SHALL GOVERN. OBTAIN AND PAY FOR ALL PERMITS AND INSPECTIONS.

THE DRAWINGS ARE DIAGRAMMATIC IN CHARACTER AND GENERALLY INDICATE THE APPROXIMATE LOCATION OF DEVICES AND EQUIPMENT. DETAILS AND/OR DIMENSIONS MAY INDICATE EXACT LOCATION OF DEVICES AND EQUIPMENT. WHERE EXACT LOCATION OF DEVICES AND EQUIPMENT IS NOT INDICATED, LOCATION MUST BE DETERMINED IN THE FIELD IN COORDINATION WITH OTHER TRADES PERFORMING WORK ON THE PROJECT.
CONTRACTOR SHALL MAKE FIELD ADJUSTMENTS TO FINAL MEASUREMENTS TO INSURE PROPER INSTALLATION OF ALL EQUIPMENT AND DEVICES. ALL ADJUSTMENTS SHALL BE RECORDED IN AS-BUILT DOCUMENTS. CONTRACTOR SHALL COORDINATE WITH ALL OTHER TRADES PRIOR TO STARTING CONSTRUCTION. IF CONFLICTS ARISE DURING CONSTRUCTION IN RELATION TO OTHER TRADES THE CONTRACTOR IS TO PROVIDE ADDITIONAL MODIFICATIONS TO ROUTING AS REQUIRED TO RESOLVE CONFLICTS.
ALL WORK TO BE INSTALLED IN NEAT AND WELL ORGANIZED MANNER. ALL SERVICES TO BE RUN IN PARALLEL AND PERPENDICULAR TO BUILDING STRUCTURE LINES. ALL EQUIPMENT SHALL BE INSTALLED IN ACCESSIBLE LOCATIONS FOR PROPER OPERATION AND MAINTENANCE.

ALL EQUIPMENT AND MATERIALS TO BE UL OR ETL LISTED FOR THE INTENDED USE. ALL EQUIPMENT AND MATERIALS SHALL BE NEW, UNLESS OTHERWISE INDICATED. ANY EQUIPMENT AND MATERIALS FOUND TO BE DEFECTIVE TO BE REPLACED AT NO COST TO THE OWNER.
ALL EQUIPMENT, MATERIALS AND WORK SHALL BE PROTECTED FROM DAMAGE DURING CONSTRUCTION. ANY DAMAGE INCURRED DURING CONSTRUCTION, AND DEEMED UNACCEPTABLE TO THE OWNER AND ARCHITECT/ENGINEER, SHALL BE REPLACED AT NO ADDITIONAL COST. ALL OPEN ENDS OF WORK TO BE COVERED TO PROTECT FROM THE INFILTRATION OF DEBRIS. PROPERLY STORE ALL MATERIAL IN A LOCATION THAT IS PROTECTED AGAINST THE ELEMENTS, DAMAGE AND THEFT.
DO NOT RUN EQUIPMENT UNTIL ALL INTERNAL BUILDING CLEANING IS COMPLETE TO REDUCE THE INFILTRATION OF DEBRIS. ALL EQUIPMENT SHALL HAVE FILTER MEDIA IN PLACE BEFORE START-UP.

GUARANTEE

GUARANTEE WORK FOR 1 YEAR FROM THE DATE OF FINAL ACCEPTANCE OF THE PROJECT. DURING THAT PERIOD MAKE GOOD ANY FAULTS OR IMPERFECTIONS THAT MAY ARISE DUE TO DEFECTS OR OMISSIONS IN MATERIALS OR WORKMANSHIP.

DUCTWORK - FIBROUS GLASS DUCT

DUCT TO BE DUCT BOARD WITH MINIMUM INSULATION VALUE OF: WITHIN UNCONDITIONED SPACE = R-6. ALL JOINTS TO BE PROPERLY SEALED AND BE AIR TIGHT. DUCT TO BE SUPPORTED PER MANUFACTURERS INSTRUCTIONS. DUCT TO BE BUILT TO MEET 2" SMACNA PRESSURE CLASSIFICATION.

DUCT WORK TO BE FABRICATED AND INSTALLED PER LATEST EDITION OF SMACNA. DUCTWORK TO PERFORM WITH NO NOISE, CHATTER, WHISTLING, OR VIBRATION. DUCTWORK MUST BE FREE FROM PULSATION UNDER ALL CONDITIONS OF OPERATION.

CONTRACTOR COORDINATION
ERECT ALL DUCTS IN THE GENERAL LOCATIONS SHOWN, BUT CONFORM TO ALL STRUCTURAL AND FINISH CONDITIONS OF THE BUILDING. BEFORE FABRICATING ANY DUCTWORK, CHECK THE PHYSICAL CONDITIONS AT THE JOB SITE AND MAKE ALL NECESSARY CHANGES IN CROSS SECTIONS, OFFSETS, AND SIMILAR ITEMS, WHETHER THEY ARE SPECIFICALLY INDICATED OR NOT.

STANDARD AND CODES
EXCEPT AS OTHERWISE INDICATED, DUCTWORK MATERIAL AND INSTALLATION SHALL COMPLY WITH SMACNA FIBROUS GLASS DUCT CONSTRUCTION STANDARDS.

SEALING OF SEAMS AND JOINTS
THE ENTIRE DUCT SYSTEM SHALL BE SEALED.

WALL PENETRATIONS.
WHERE DUCTS PASS THROUGH WALLS IN EXPOSED AREAS, INSTALL SUITABLE ESCUTCHEONS MADE OF SHEET METAL ANGLES AS CLOSERS. AT ALL LOCATIONS WHERE DUCTWORK PASSES THROUGH FLOORS, PROVIDE WATERTIGHT SLEEVES PROJECTING 3 INCHES ABOVE FINISHED FLOOR AND FLUSH WITH BOTTOM OF FLOOR SLAB. FABRICATE SLEEVES OF 1/8-INCH THICK STEEL, GALVANIZED AFTER FABRICATION. ANCHOR INTO ADJACENT FLOOR SLAB AS REQUIRED. SLEEVES ARE REQUIRED INSIDE AS WELL AS OUTSIDE CHASES. SUPPORT DUCTS WHERE PASSING THROUGH FLOORS WITH STEEL STRUCTURAL ANGLES OF ADEQUATE BEARING SURFACE, GALVANIZED AFTER FABRICATION AND RESTING ON TOP OF THE SLEEVE.
ELBOWS.

ELBOWS
RECTANGULAR: WHERE SQUARE ELBOWS ARE SHOWN, OR ARE REQUIRED FOR GOOD AIR FLOW, PROVIDE AND INSTALL BARBER-COLMAN OR EQUAL DOUBLE-WALL AIR FOIL TURNING VANES. USE RADIUS ELBOWS WITH A CENTER LINE RADIUS OF NOT LESS THAN 1-1/2 TIMES THE DUCT WIDTH. RADIUS ELBOWS MAY BE PROVIDED IN LIEU OF VANES IN ELBOWS WHERE SPACE AND AIR FLOW REQUIREMENTS PERMIT.

LOW PRESSURE INSULATED FLEXIBLE DUCT.
FLEX DUCT SHALL BE ATCO UPC #031 OR EQUIVALENT WITH A MINIMUM INSULATION VALUE OF R-6. DO NOT EXCEED 6 FEET IN LENGTH WITH ANY FLEXIBLE DUCT. SUPPORT DUCT INDEPENDENTLY OF LIGHTS, CEILING AND PIPING.

FLEXIBLE CONNECTIONS
WHERE DUCTS CONNECT TO FANS MAKE FLEXIBLE AIRTIGHT CONNECTIONS USING "VENTGLAS" FABRIC. THE FABRIC MUST BE FIRE-RESISTANT, WATERPROOF AND MILDEW RESISTANT WITH A WEIGHT OF APPROXIMATELY 30 OUNCES PER SQUARE YARD. PROVIDE A MINIMUM OF 1/2-INCH SLACK IN THE CONNECTIONS, AND A MINIMUM OF 2-1/2-INCHES DISTANCE BETWEEN THE EDGES OF THE DUCTS. ALSO PROVIDE A MINIMUM OF 1-INCH SLACK FOR EACH INCH OF STATIC PRESSURE ON THE FAN SYSTEM. SECURELY FASTEN FABRIC TO APPARATUS AND TO ADJACENT DUCTWORK BY MEANS OF GALVANIZED FLATS OR DRAW BANDS.

ACCESS DOORS
INSTALL DUCTWORK ACCESS DOORS IN STRUCTURAL ANGLE FRAMES AND PROVIDE WITH SASH LOCKS AND HINGES ARRANGED FOR CONVENIENT ACCESS. CONSTRUCT DOORS WHICH OCCUR IN INSULATED DUCTS WITH AN INSULATION FILLER.

DUCT LEAKAGE
ALLOWABLE LEAKAGE: MAXIMUM ALLOWABLE LEAKAGE IS 5% OF TOTAL FLOW.

EXTERNAL DUCT INSULATION

FURNISH AND INSTALL EXTERNAL INSULATION ON LOW-VELOCITY SUPPLY AIR ROUND DUCTS. EXTERNAL INSULATION OF CONCEALED AND EXPOSED DUCTS IS INCLUDED IN THIS SECTION. INTERNAL ACOUSTIC DUCT LININGS ARE SPECIFIED UNDER DUCTWORK AND NOT INCLUDED IN THIS SECTION.

PRODUCTS
INSULATION: PROVIDE FLEXIBLE GLASS FIBER INSULATION WITH FACTORY-APPLIED, REINFORCED FOIL-KRAFT FACING. A MINIMUM THERMAL RESISTANCE OF 6.0 (SQ. FT. X DEGREES F X HRS. PER BTU) AT 75F IS REQUIRED, AFTER INSTALLATION (NOT IN BAG). PROVIDE MINIMUM 1-POUND DENSITY INSULATION, WHICH COMPLIES WITH SPECIFICATION H-B-100B.

COATING AND ADHESIVE
COATING: PROVIDE BENJAMIN FOSTER 30-35 VAPOR BARRIER COATING.
ADHESIVE: PROVIDE BENJAMIN FOSTER 85-20 VAPOR BARRIER ADHESIVE.

EXECUTION
DUCT, ROUND, OR RECTANGULAR
INSULATION SHALL BE WRAPPED TIGHTLY ON THE DUCTWORK WITH ALL CIRCUMFERENTIAL JOINTS BUTTED AND LONGITUDINAL JOINTS OVERLAPPED A MINIMUM OF 2 INCHES. IN ADDITION, SECURE INSULATION TO THE BOTTOM OF RECTANGULAR DUCTWORK OVER 24 INCHES WIDE BY THE USE OF MECHANICAL FASTENERS AT NO MORE THAN 18 INCHES ON CENTER.

EQUIPMENT CONDENSATE DRAIN PIPING

FURNISH AND INSTALL PIPING AND PIPING APPURTENANCES TO DRAIN HVAC EQUIPMENT REQUIRING DRAINS. PROVIDE SEAMLESS, HARD-DRAWN, TYPE L, COPPER WATER TUBE CONFORMING TO ASTM B 88, AND WROUGHT COPPER FITTINGS. INSULATE PIPING PER LOW TEMPERATURE PIPING INSULATION.

TEST AND BALANCE

CERTIFIED TEST AND BALANCE IS REQUIRED FOR PROJECT. CONTRACTOR SHALL MAKE ALL BALANCING ADJUSTMENTS REQUIRED TO MEET OWNER AND ARCHITECT/ENGINEER PREFERENCES. ADJUST SHEAVES, BELTS, DRIVES, DAMPERS, ETC., TO OBTAIN AIR QUANTITIES SHOWN. VERIFY PROPER OPERATION OF ALL SYSTEMS. VERIFY ALL VOLUME DAMPERS ARE INSTALLED. PERFORM TAB OPERATIONS AS REQUIRED BY THE NEBB TEST AND BALANCE PROCEDURES MANUAL AND RECORD TESTS RESULTS FOR THE OWNER'S REVIEW. TEST AND BALANCE TO BE COMPLETED BEFORE FINAL INSPECTION BY AUTHORITY HAVING JURISDICTION.

HVAC LEGEND

14/10	DUCT SIZE (WIDTH/HEIGHT) INDICATES INSIDE DIMENSION OF DUCT.
	ELBOW UP OR DOWN IN DUCTWORK.
	SUPPLY AIR DUCT SECTION
	RETURN AIR DUCT SECTION
	EXHAUST AIR DUCT SECTION
	CEILING SUPPLY AIR DIFFUSER
	CEILING RETURN AIR DEVICE
	CEILING EXHAUST AIR DEVICE
	MOTORIZED ACTUATOR AND DAMPER
	VOLUME DAMPER
T	THERMOSTAT
A1 200	AIR DEVICE MARK

HVAC ABBREVIATIONS

A	AMPERES	LDB	LEAVING DRY BULB
ABV	ABOVE	LWB	LEAVING WET BULB
AD	ACCESS DOOR	MAX	MAXIMUM
AD	AUXILIARY DRAIN	MIN	MINIMUM
AFF	ABOVE FINISHED FLOOR	MTD	MOUNTED
AFG	ABOVE FINISHED GRADE	MTG HT	MOUNTING HEIGHT
BA VA	BALL VALVE	MVD	MOTORIZED VOLUME DAMPER
BFF	BELOW FINISHED FLOOR	OA	OUTSIDE AIR
BLW	BELOW	OBD	OPPOSED BLADE DAMPER
BTUH	BRITISH THERMAL UNITS / HOUR	NIC	NOT IN CONTRACT
CFM	CUBIC FEET PER MINUTE	NTS	NOT TO SCALE
CO	CLEANOUT	PH	PHASE
CONT	CONTINUATION	RA	RETURN AIR
COORD	COORDINATE	RH	RELATIVE HUMIDITY
D	CONDENSATE DRAIN LINE, EQUIP. DRAIN	RED	REDUCER
DIA	DIAMETER	REQ'D	REQUIRED
DN	DOWN	SA	SUPPLY AIR
ETR	EXISTING TO REMAIN	SEER	SEASONAL ENERGY EFFICIENCY RATIO
EA	EXHAUST AIR	SM	GALVANIZED SHEET METAL
EDB	ENTERING DRY BULB TEMPERATURE	SP	STATIC PRESSURE, IN. H2O
EFF	EFFICIENCY	SS	STAINLESS STEEL
ELECT	ELECTRICAL	TEMP	TEMPERATURE
EQUIP	EQUIPMENT	THK	THICK, THICKNESS
ESP	EXTERNAL STATIC PRESSURE	TSTAT	THERMOSTAT
EWB	ENTERING WET BULB TEMPERATURE	TYP	TYPICAL
EX	EXISTING	UF	UNDER FLOOR
F&I	FURNISH AND INSTALL	UG	UNDER GROUND
FT	FEET	UON	UNLESS OTHERWISE NOTED
GSH	GROSS SENSIBLE HEAT	V	VOLT
GLH	GROSS LATENT HEAT	VD	VOLUME DAMPER
GTH	GROSS TOTAL HEAT	W	WATT
IN	INCHES	W	WIDE, WIDTH
INSUL	INSULATION, INSULATE	W/	WITH
L	LONG, LENGTH	WG	WATER GAGE

AIR COOLED HEAT PUMP SCHEDULE

MARK	COOLING		HEATING		REFR.	MINIMUM EFFICIENCY		ELECTRICAL			TRANE MODEL
	MINIMUM CAPACITY MBH	CONDENSER TEMP. (F)	MINIMUM CAPACITY MBH	CONDENSER TEMP. (F)		SEER	HSPF	VOLTS/PHASE	MCA	MOCP	
HP-1	29	105	33	47	R410A	14	8.20	240/1	19	30	4TMR4036
HP-2	39	105	39	47	R410A	14	8.20	240/1	25	40	4TMR4042

NOTES:
1. PROVIDE WITH INTEGRAL REVERSING VALVE AND LOUVERED HAIL GUARDS.
2. MANUF. TO INCLUDE 1 YEAR PARTS AND 5 YEAR COMPRESSOR WARRANTY.
3. PROVIDE LOCKING-TYPE TAMPER-RESISTANT CAPS ON ALL REFRIGERANT CIRCUIT ACCESS PORTS.

FAN COIL UNIT SCHEDULE

MARK	CONFIGURATION	CFM	OA CFM	EXTERNAL STATIC IN. WC	FAN DRIVE	VOLTS/ PHASE	MOTOR HP	DX COIL (COOLING)				DX COIL (HP HEATING)			ELECTRIC HEAT					TRANE MODEL
								EAT (F) DB/WB	MIN. GTH MBTUH	MIN. GSH MBTUH	MIN. GLH MBTUH	EAT (F) DB	LAT (F) DB	MIN. GTH MBTUH	KW	MBTUH	VOLTS/ PHASE	MCA	MOCP	
FCU-1	HORIZONTAL	1200	75	0.5	DIRECT	240/1	1/2	80/67	29	24	5	70	96	33	9.6	32.8	240/1	53	60	TEM4A0C36
FCU-2	HORIZONTAL	1400	75	0.5	DIRECT	240/1	1/2	80/67	39	31	8	70	96	39	9.6	32.8	240/1	55	60	TEM4A0C42

NOTES:
1. PROVIDE SINGLE POINT POWER CONNECTION AND CONDENSATE FLOAT SWITCH.

FAN SCHEDULE

MARK	SERVES	INTERLOCK WITH	GREENHECK MODEL #	CFM	ESP (IN. W.C.)	MAX. FAN RPM	MOTOR WATTS	ELECTRICAL VOLT/PHASE	MAX. SONES	NOTES
EF-1	RESTROOM	LIGHTS	SP-B110	75	0.3	950	80	115/1	2	1, 2
EF-2	RESTROOM	LIGHTS	SP-B110	75	0.3	950	80	115/1	2	1, 2
EF-3	CUSTODIAL	CONTINUOUS	SP-B110	75	0.3	950	80	115/1	2	1, 2

NOTES:
1. PROVIDE WITH UNIT MOUNTED DISCONNECT AND SPEED CONTROLLER.
2. PROVIDE WITH CEILING GRILLE.

AIR DEVICE SCHEDULE

MARK	NECK SIZE	FRAME SIZE	FILTER SIZE	MOUNTING	SERVICE	FINISH	MATERIAL	MANUFACTURER	MODEL	MAX. CFM	NOTES
A1	6	6 X 4	--	SURFACE	SUPPLY	WHITE	STEEL	TITUS	250 - 2 WAY	100	1, 3
A2	8	10 X 8	--	SURFACE	SUPPLY	WHITE	STEEL	TITUS	250 - 3 WAY	200	1, 3
A3	10	12 X 12	--	SURFACE	SUPPLY	WHITE	STEEL	TITUS	250 - 3 WAY	300	1, 3
R1	6	8 X 8	--	SURFACE	RETURN	WHITE	STEEL	TITUS	350RL	100	1, 2, 4
R2	8	12 X 12	--	SURFACE	RETURN	WHITE	STEEL	TITUS	350RL	175	1, 2, 4
R3	10	14 X 14	--	SURFACE	RETURN	WHITE	STEEL	TITUS	350RL	300	1, 2, 4
R4	12	16 X 16	--	SURFACE	RETURN	WHITE	STEEL	TITUS	350RL	500	1, 2, 4

NOTES:
1. MATCH DEVICE TRIM TO CEILING OR WALL INSTALLED.
2. DUCT TO AIR DEVICE TO BE SAME SIZE AS SCHEDULED DUCT CONNECTION, UON.
3. PROVIDE AIR DEVICE WITH INTEGRAL DAMPER.
4. PROVIDE SQUARE TO ROUND TRANSITION.

OUTSIDE AIR CALCULATIONS

ROOM	PEOPLE QTY (Pz)	AREA SQ FT (Az)	CFM/PERSON (Rp)	CFM/ SQ FT (Ra)	Min CFM (Ra*Az)	People CFM (Rp*Pz)	Breathing Zone Outdoor Airflow (Vbz=Rp*Pz+Ra*Az)	Zone Air Distribution Effectiveness (Ez)	Zone Outdoor Airflow (Voz=Vbz/Ez)	Single Zone System (Voz=Vbz/Ez)	CALC. CFM
OFFICE 5	1	192	5	0.06	12	5	17	1.0	17	17	17
RECEPTION	1	352	5	0.06	21	5	26	1.0	26	26	26
CONFERENCE	6	184	5	0.06	11	30	41	1.0	41	41	41
OFFICE 4	1	123	5	0.06	7	5	12	1.0	12	12	12
BREAKROOM	0	172	5	0.06	10	0	10	1.0	10	10	10
HALLWAY	0	138	5	0.06	8	0	8	1.0	8	8	8
OFFICE 15	1	212	5	0.06	13	5	18	1.0	18	18	18
OFFICE 14	1	123	5	0.06	7	5	12	1.0	12	12	12
OFFICE 13	1	128	5	0.06	8	5	13	1.0	13	13	13

NOTES:
1. CALCULATIONS PER ASHRAE 62.1.

X5 Engineering, Inc.
MEP | Energy Analysis | Commissioning
PO Box 91743 Austin, TX 78709-1743 512.815.2959

www.X5Engineering.com TBPE FIRM F-17186

GUMBEAUX
CHERRY PEAK OFFICE PARK, BUILDING 4B
3503 WILD CHERRY ROAD, AUSTIN, TEXAS 78738

DOCUMENT RELEASED FOR INTERIM REVIEW
UNDER THE AUTHORITY OF
MICHAEL R. SESTAK, P.E. 92683
DOCUMENT INCOMPLETE.
DO NOT USE FOR BIDDING, PERMIT, OR CONSTRUCTION.

06/10/19

PROJECT NO. 19.05.00
DATE 06/10/2019
DRAWN BY: MRS
REVISIONS:

HVAC NOTES & SCHEDULES
M0.1

COM*check* Software Version 4.1.1.0

Mechanical Compliance Certificate

Project Information

Energy Code:	2015 IECC
Project Title:	Gumbeaux
Location:	Lakeway, Texas
Climate Zone:	2a
Project Type:	New Construction

Construction Site:
3503 Wild Cherry Road
Building 4B
Austin, TX 78738

Owner/Agent:

Designer/Contractor:
Michael Sestak
X5Engineering
PO Box 91743
Austin, TX 78709
msestak@x5eng.com

Additional Efficiency Package(s)

Reduced interior lighting power. Requirements are implicitly enforced within interior lighting allowance calculations.

Mechanical Systems List

Quantity	System Type & Description
1	HVAC System 1 (Single Zone): Split System Heat Pump Heating Mode: Capacity = 46 kBtu/h, Proposed Efficiency = 8.20 HSPF, Required Efficiency = 8.20 HSPF Cooling Mode: Capacity = 44 kBtu/h, Proposed Efficiency = 14.00 SEER, Required Efficiency: 14.00 SEER Fan System: None
1	HVAC System 2 (Single Zone): Split System Heat Pump Heating Mode: Capacity = 27 kBtu/h, Proposed Efficiency = 8.20 HSPF, Required Efficiency = 8.20 HSPF Cooling Mode: Capacity = 39 kBtu/h, Proposed Efficiency = 14.00 SEER, Required Efficiency: 14.00 SEER Fan System: None

Mechanical Compliance Statement

Compliance Statement: The proposed mechanical design represented in this document is consistent with the building plans, specifications, and other calculations submitted with this permit application. The proposed mechanical systems have been designed to meet the 2015 IECC requirements in COM*check* Version 4.1.1.0 and to comply with any applicable mandatory requirements listed in the Inspection Checklist.

Name - Title _____ Signature _____ Date _____

Project Title: Gumbeaux — Report date: 03/14/20
Data filename: D:\Dropbox\X5Engineering\Projects\20016 Gumbeaux\ComCheck\Gumbeaux Comcheck.cck — Page 3 of 13

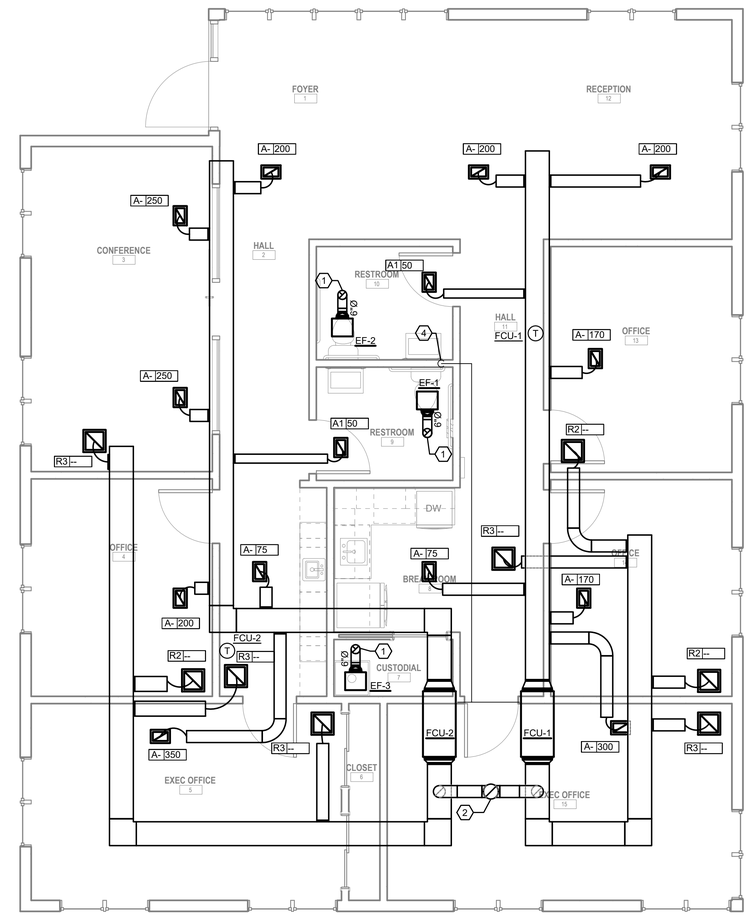

HP-1 5 HP-2 5

KEYED NOTES

1. EXHAUST DUCT UP THROUGH ROOF. INSTALL ROOF CAP AT ROOF. ROOF CAP EQUIVALENT TO BROAN 634.
2. 10Ø OUTSIDE AIR DUCT UP THROUGH ROOF. INSTALL ROOF CAP AT ROOF. ROOF CAP EQUIVALENT TO 634.
3. PROVIDE WIFI ENABLED THERMOSTAT.
4. PROVIDE 3/4" CONDENSATE PIPING FROM UNIT TO FIXTURE DRAIN. CONCEAL PIPING WITHIN WALL.
5. PROVIDE CONCRETE PADS FOR CONDENSING UNITS.

PLAN NORTH TRUE NORTH

1 HVAC PLAN
SCALE: 1/4" = 1'-0"

X5 Engineering, Inc.
MEP | Energy Analysis | Commissioning
PO Box 91743 Austin, TX 78709-1743 512.815.2959

www.X5Engineering.com TBPE FIRM F-17166

GUMBEAUX
CHERRY PEAK OFFICE PARK, BUILDING 4B
3503 WILD CHERRY ROAD, AUSTIN, TEXAS 78738

DOCUMENT RELEASED FOR INTERIM REVIEW
UNDER THE AUTHORITY OF
MICHAEL R. SESTAK, P.E. 92083
DOCUMENT INCOMPLETE.
DO NOT USE FOR BIDDING,
PERMIT, OR CONSTRUCTION.

06/10/19

PROJECT NO.	19.05.00
DATE	06/10/2019
DRAWN BY:	MRS
REVISIONS:	

HVAC PLAN

M1.1

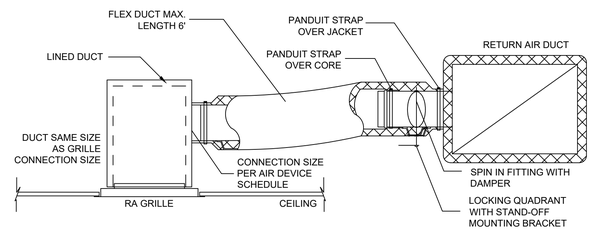

RETURN AIR DUCT CONNECTION DETAIL

6 SCALE:6

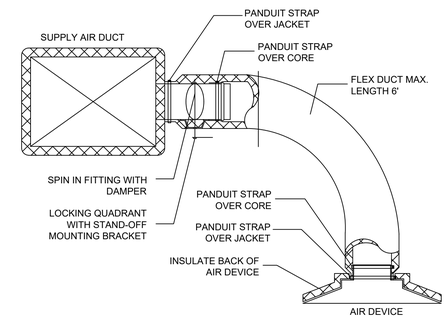

DUCT TAKEOFF, FLEX & CEILING DIFFUSER DETAIL

5 SCALE:NTS

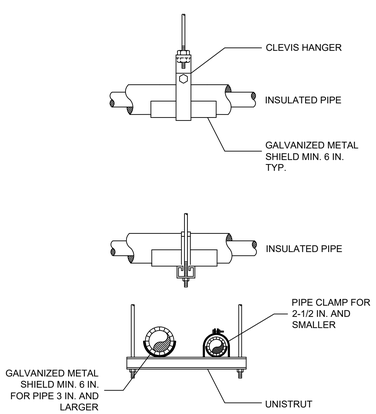

PIPING SUPPORT DETAIL

4 SCALE:NTS

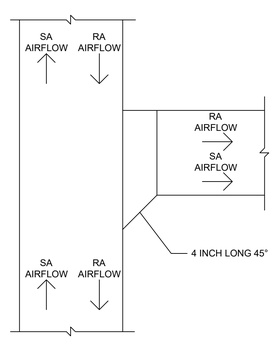

BRANCH DUCT DETAIL

3 SCALE:NTS

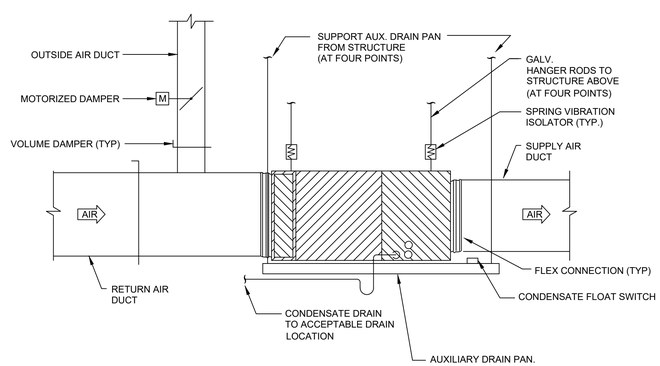

HORIZONTAL FAN COIL DETAIL

2 SCALE:NTS

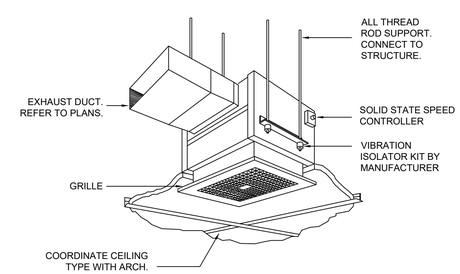

CEILING CABINET FAN DETAIL

1 SCALE:NTS

X5 Engineering, Inc.
MEP | Energy Analysis | Commissioning
PO Box 91743 Austin, TX 78709-1743 512.815.2959

GUMBEAUX

CHERRY PEAK OFFICE PARK, BUILDING 4B
3503 WILD CHERRY ROAD, AUSTIN, TEXAS 78738

DOCUMENT RELEASED FOR INTERIM REVIEW UNDER THE AUTHORITY OF MICHAEL R. SESTAK, P.E. 92683 DOCUMENT INCOMPLETE. DO NOT USE FOR BIDDING, PERMIT, OR CONSTRUCTION.

06/10/19

PROJECT NO.	19.05.00
DATE	06/10/2019
DRAWN BY:	MRS
REVISIONS:	

HVAC - DETAILS

M2.1

ELECTRICAL GENERAL PROVISIONS & SPECIFICATIONS

FURNISH AND INSTALL ALL NECESSARY EQUIPMENT AND DEVICES NECESSARY TO PROVIDE A FUNCTIONING SYSTEM. ELEMENT OF THE WORK TO INCLUDE BUT NOT LIMITED TO MATERIALS, LABOR, TRANSPORTATION, SUPPLIES, EQUIPMENT, HOISTING RIGGING, STORAGE, UTILITIES AND ALL REQUIRED PERMITS, LICENSES AND INSPECTIONS. ALL WORK TO COMPLY WITH NATIONAL ELECTRICAL CODE, 2017 EDITION, 2015 INTERNATIONAL ENERGY CONSERVATION CODE AND ALL CODE AND ORDINANCE REQUIREMENTS OF AUTHORITY HAVING JURISDICTION. WHERE THE CONTRACT DOCUMENTS ARE IN EXCESS OF CODE REQUIREMENTS, THE CONTRACT DOCUMENTS SHALL GOVERN. WHERE THE CODES ARE IN EXCESS OF CONTRACT DOCUMENTS, THE CODES SHALL GOVERN.

THE DRAWINGS ARE DIAGRAMMATIC IN CHARACTER AND GENERALLY INDICATE THE APPROXIMATE LOCATION OF DEVICES AND EQUIPMENT. DETAILS AND/OR DIMENSIONS MAY INDICATE EXACT LOCATION OF DEVICES AND EQUIPMENT. WHERE EXACT LOCATION OF DEVICES AND EQUIPMENT IS NOT INDICATED, LOCATION MUST BE DETERMINED IN THE FIELD IN COORDINATION WITH OTHER TRADES PERFORMING WORK ON THE PROJECT. EXACT LOCATIONS OF LIGHTING FIXTURES ARE INDICATED ON THE ARCHITECTURAL REFLECTED CEILING PLANS AND BUILDING ELEVATIONS.

CONTRACTOR SHALL MAKE FIELD ADJUSTMENTS TO FINAL MEASUREMENTS TO INSURE PROPER INSTALLATION OF ALL EQUIPMENT AND DEVICES. ALL ADJUSTMENTS SHALL BE RECORDED IN AS-BUILT DOCUMENTS. CONTRACTOR SHALL COORDINATE WITH ALL OTHER TRADES PRIOR TO STARTING CONSTRUCTION. IF CONFLICTS ARISE DURING CONSTRUCTION IN RELATION TO OTHER TRADES THE CONTRACTOR IS TO PROVIDE ADDITIONAL MODIFICATIONS TO ROUTING AS REQUIRED TO RESOLVE CONFLICTS. CONTRACTOR SHALL REVIEW PLUMBING, HVAC AND ARCHITECTURAL DRAWINGS FOR EXACT LOCATIONS AND POWER REQUIREMENTS FOR ALL EQUIPMENT.

ALL WORK TO BE INSTALLED IN NEAT AND WELL-ORGANIZED MANNER. ALL SERVICES TO BE RUN IN PARALLEL AND PERPENDICULAR TO BUILDING STRUCTURE LINES. ALL DEVICES AND EQUIPMENT SHALL BE INSTALLED IN ACCESSIBLE LOCATIONS FOR PROPER OPERATION AND MAINTENANCE.

ALL EQUIPMENT AND MATERIALS TO BE UL OR ETL LISTED FOR THE INTENDED USE. ALL EQUIPMENT AND MATERIALS SHALL BE NEW, UNLESS OTHERWISE INDICATED IN THE CONTRACT DOCUMENTS. ANY EQUIPMENT AND MATERIALS FOUND TO BE DEFECTIVE TO BE REPLACED AT NO COST THE OWNER.

ALL EQUIPMENT, MATERIALS AND WORK SHALL BE PROTECTED FROM DAMAGE DURING CONSTRUCTION. ANY DAMAGE INCURRED DURING CONSTRUCTION, AND DEEMED UNACCEPTABLE TO THE OWNER AND ARCHITECT/ENGINEER, SHALL BE REPLACED AT NO ADDITIONAL COST. ALL OPEN ENDS OF WORK TO BE COVERED TO PROTECT FROM THE INFILTRATION OF DEBRIS. PROPERLY STORE ALL MATERIAL IN A LOCATION THAT IS PROTECTED AGAINST THE ELEMENTS, DAMAGE AND THEFT.

SUBMITTALS

SUBMITTALS AND SHOP DRAWINGS REQUIRED FOR ALL PRODUCT DATA. SHOP DRAWINGS REQUIRED FOR ALL ELECTRICAL ROOMS. OPERATIONS AND MAINTENANCE MANUALS AND AS-BUILT DRAWINGS REQUIRED AS PART OF CLOSE OUT DOCUMENTS. REFER TO ARCHITECT FOR ADDITIONAL SUBMITTAL REQUIREMENTS.

WARRANTY

GUARANTEE WORK FOR 1 YEAR FROM THE DATE OF FINAL ACCEPTANCE OF THE PROJECT. DURING THAT PERIOD MAKE GOOD ANY FAULTS OR IMPERFECTIONS THAT MAY ARISE DUE TO DEFECTS OR OMISSIONS IN MATERIALS OR WORKMANSHIP.

IDENTIFICATION AND LABELING

EXISTING CIRCUITRY INFORMATION IS TAKEN FROM FIELD SURVEY AND EXISTING DRAWINGS. CONTRACTOR SHALL FIELD VERIFY CIRCUITRY AND INDICATE DISCREPANCIES ON THE AS-BUILT DRAWINGS.

ALL PANEL BOARDS, DISCONNECTS, TRANSFORMERS OR OTHER EQUIPMENT IN SEPARATE ENCLOSURE SHALL HAVE AN EXTERIOR ENGRAVED LAMINATE LABEL. LABELS SHALL HAVE 1/4 INCH LETTERS. LABELS SHALL INDICATE THE EQUIPMENT MARK AS INDICATED IN THE DOCUMENTS, THE AMPS AND VOLTAGE OF THE EQUIPMENT AND THE SOURCE.

EXAMPLE: “PANELBOARD LA, 200A - 208Y/120V, SERVED FROM TRANSFORMER TLA“

ALL JUNCTION BOXES LOCATED ABOVE CEILING OR EXPOSED TO BE MARKED WITH CIRCUIT INFORMATION AND COLOR CODED PER AUTHORITY HAVING JURISDICTION.

ALL RECEPTACLES SHALL BE LABELED WITH SELF ADHESIVE TAPE AND INDICATE THE PANEL DESIGNATION AND CIRCUIT NUMBER. UTILIZE CLEAR TAPE WITH BLACK LETTERS, UNLESS OTHERWISE NOTED. PROVIDE SAMPLE TO ARCHITECT FOR APPROVAL.

EXAMPLE: “LA-2“

GROUNDING

EQUIPMENT GROUND REQUIRED PER NEC ARTICLE 250. ALL GROUNDING AND BONDING CONDUCTORS TO BE SIZED PER NEC ARTICLE 250. ALL FEEDERS AND BRANCH CIRCUITS SHALL HAVE GROUNDING CONDUCTOR AND DEDICATED NEUTRAL.

RACEWAYS

MINIMUM CONDUIT SIZE SHALL BE 3/4 INCH. CONDUIT LOCATED IN INTERIOR LOCATIONS TO BE ELECTRICAL METALLIC TUBING (EMT) WITH COMPRESSION FITTINGS. MALLEABLE IRON (DIE CAST) FITTINGS ARE NOT ACCEPTABLE. CONDUIT LOCATED IN BELOW GRADE TO BE RIGID NON-METALLIC ENCASED IN CONCRETE.

LIGHT FIXTURE BRANCH CIRCUITS MAY BE FLEXIBLE METAL CONDUIT (FMC) WHERE FINAL CONNECTION IS MADE TO FIXTURE AND LENGTH IS MAXIMUM 60 INCHES.

SUPPORT EMT AT INTERVALS NOT TO EXCEED 10 FEET AND WITHIN 3 FEET FROM FITTINGS, BOXES, PANELS, ETC. CONDUIT SHALL BE SECURELY SUPPORTED FROM STRUCTURE. SUPPORTING WITH CEILING TEE CLIPS IS NOT ACCEPTABLE. CONDUIT SHALL NOT BE SUPPORTED FROM CEILING GRID. NO RUN OF CONDUIT SHALL HAVE MORE THAN 360 DEGREES OF BENDS AND BE LONGER THAN 100 FEET WITHOUT A PROPERLY SIZED JUNCTION BOX PER NEC.

EMT CONDUIT SHALL BE SIZED IN ACCORDANCE WITH NEC PERCENT FILL REQUIREMENTS AND AS INDICATED IN THE DOCUMENTS. GROUPING MULTIPLE 20 AMP BRANCH CIRCUITS IN A SINGLE CONDUIT IS ACCEPTABLE ONLY WHERE THE NUMBER OF CONDUCTORS INDICATED IN THE DOCUMENTS IS MAINTAINED. NO MORE THAN SIX CURRENT CARRYING #12 THHN OR #10 THHN CURRENT CARRYING CONDUCTORS ARE ALLOWED IN A SINGLE RACEWAY. MULTIWIRE BRANCH CIRCUITS SHALL BE PROVIDED WITH A DEDICATED NEUTRAL AND DEDICATED GROUND PER NEC 210.4(B). USE OF A SHARED NEUTRAL OR GROUND IS NOT ACCEPTABLE. CONTRACTOR SHALL APPLY THE PROPER NEC DE-RATING FACTORS BASED ON THE FULL RATING OF THE BRANCH CIRCUIT OVERCURRENT PROTECTION DEVICES.

USE A UL LISTED WIRE-PULLING COMPOUND APPROVED BY THE CONDUCTOR MANUFACTURER WHERE NECESSARY.

RACEWAYS SHALL BE INSTALLED PER NEC AND LOCAL REQUIREMENTS.

INSULATED CONDUCTORS

MINIMUM CONDUCTOR SIZE SHALL BE #12. CONDUCTOR SIZES #12 AND #10 TO BE SOLID COPPER WIRE WITH THHN/THWN INSULATION. CONDUCTOR SIZES #8 AND LARGER TO BE STRANDED COPPER WITH THHN/THWN INSULATION. COLOR CODE ALL WIRES PER AUTHORITY HAVING JURISDICTION.

ALL 120 VOLT, 20 AMP HOME RUNS LONGER THAN 100 FEET AND ALL 277 VOLT, 20 AMP HOME RUNS LONGER THAN 200 FEET SHALL BE MINIMUM #10 CONDUCTOR.

EACH BRANCH CIRCUIT SHALL HAVE A DEDICATED NEUTRAL AND A DEDICATED GROUND CONDUCTOR.

BOXES

ALL BOXES TO BE 4 INCH SQUARE GALVANIZED STEEL DEVICE BOXES EXCEPT FOR IN MASONRY WALLS. BOXES TO CONFORM TO NEC ARTICLE 370.

MASONRY BOXES MAY BE USED IN MASONRY WALLS.

WIRING DEVICES

ALL WIRING DEVICES SHALL BE MINIMUM NEMA 5-20R RATED UNLESS OTHERWISE NOTED. GFCI RECEPTACLES SHALL BE LISTED UL 943.

CEILING AND WALL MOUNTED OCCUPANCY SENSORS SHALL BE MULTI TECHNOLOGY. FURNISH AND INSTALL ALL REQUIRED LOW VOLTAGE WIRING, POWER PACKS AND RELAYS NECESSARY FOR A COMPLETE WORKING SYSTEM.

LIGHT SWITCHES TO BE DECORATOR STYLE.

VERIFY THE LOCATION, MOUNTING HEIGHT AND ORIENTATION OF DEVICES WITHIN MILLWORK WITH ARCHITECT BEFORE ROUGH-IN. VERIFY THE EXACT LOCATION OF ALL LIGHT SWITCHES WITH ARCHITECT BEFORE ROUGH-IN. ALL DEVICE COLORS SHALL BE SELECTED BY ARCHITECT. HORIZONTALLY INSTALLED RECEPTACLES SHALL HAVE THE GROUND PRONG TO THE LEFT.

VERIFY THAT DIMMER LOAD RATING EXCEEDS LOAD RATING BEFORE ENERGIZING. APPLY MANUFACTURER'S DE-RATING SCHEDULE IF DIMMERS ARE GANGED.

ENCLOSED SAFETY SWITCHES

ALL SAFETY SWITCHES SHALL BE GENERAL DUTY, QUICK-MAKE AND QUICK-BREAK.

PANELBOARDS

CONTRACTOR SHALL PROVIDE PANELBOARDS AS INDICATED IN PANEL SCHEDULES. PANELBOARDS TO BE LOCKABLE. PROVIDE ACCURATE TYPED PANEL CIRCUIT DIRECTORY IDENTIFYING EQUIPMENT OR DEVICES SERVED AND ROOM NAMES OR NUMBERS WHERE LOAD IS INSTALLED. INDICATE SPARES AND SPACES.

DATA AND COMMUNICATION SYSTEM

FURNISH AND INSTALL AN EMPTY BOX WITH 3/4 INCH EMT CONDUIT AND PULL STRING TO ABOVE ACCESSIBLE CEILING FOR ALL DATA, COMMUNICATION, SECURITY AND A/V DEVICES UNLESS NOTED OTHERWISE. ALL WIRING AND DEVICES SHALL BE PROVIDED AND INSTALLED BY OTHERS.

ABBREVIATIONS - ELECTRICAL

A	AMPS	MC	METAL CLAD
ABS	ABOVE BACKSPLASH	MCB	MAIN CIRCUIT BREAKER
AFF	ABOVE FINISHED FLOOR	MCC	MOTOR CONTROL CENTER
ATS	AUTOMATIC TRANSFER SWITCH	MDP	MAIN DISTRIBUTION PANEL
C	CONDUIT	MH	METAL HALIDE
CB	CIRCUIT BREAKER	MLO	MAIN LUG ONLY
℄	CENTERLINE	MSB	MAIN SWITCH BOARD
CT	CURRENT TRANSFORMER	NEC	NATIONAL ELECTRICAL CODE
DISC SW	DISCONNECT SWITCH	NEMA	NATIONAL ELECTRICAL MANUFACTURES ASSOCIATION
EPO	EMERGENCY POWER OFF	NC	NORMALLY CLOSED
EQUIP	EQUIPMENT	NCL	NON-COINCIDENTAL LOAD
EX	EXISTING	NFPA	NATIONAL FIRE PROTECTION ASSOCIATION
FACP	FIRE ALARM CONTROL PANEL	NIC	NOT IN CONTRACT
FAAP	FIRE ALARM ANNUNCIATOR PANEL	NL	NIGHT LIGHT
GFCI	GROUND FAULT CIRCUIT INTERRUPTER	NO	NORMALLY OPEN
G	GROUND	NTS	NOT TO SCALE
GRS	GALVANIZED RIGID STEEL	OCC	OCCUPANCY
HID	HIGH INTENSITY DISCHARGE	PNL	PANELBOARD
HP	HORSEPOWER	RCPT	RECEPTACLE
HPS	HIGH PRESSURE SODIUM	TV	TELEVISION
IG	ISOLATED GROUND	UON	UNLESS OTHERWISE NOTED
KAIC	THOUSAND AMPERE INTERRUPTING CURRENT	V	VOLT
KCMIL	THOUSAND CIRCULAR MIL	VA	VOLT AMP
KW	KILOWATT	WP	WEATHER PROOF
LRA	LOCK ROTOR AMPS	XFMR	TRANSFORMER

DEVICE SYMBOLS

	DUPLEX RECEPTACLE, ℄ AT 16 INCHES AFF UON
	QUADRUPLEX RECEPTACLE, ℄ AT 16 INCHES AFF UON
	SIMPLEX RECEPTACLE, ℄ AT 16 INCHES AFF UON
	SPECIAL PURPOSE RECEPTACLE, ℄ AT 16 INCHES AFF UON
GFCI	DUPLEX GFCI RECEPTACLE, ℄ AT 16 INCHES AFF UON
	HALF SWITCHED DUPLEX RECEPTACLE, ℄ AT 16 INCHES AFF UON
	SWITCHED DUPLEX RECEPTACLE, ℄ AT 16 INCHES AFF UON
WP	DUPLEX GFCI RECEPTACLE WITH WEATHER PROOF IN-USE COVER, ℄ AT 18 INCHES AFF UON
J	JUNCTION BOX
	PUSH BUTTON SWITCH (NORMALLY OPEN), INSTALL JUNCTION BOX ℄ AT 48 INCHES AFF UON
	DATA OUTLET BOX ℄ AT 16 INCHES AFF UON. INSTALL 3/4" CONDUIT TO ABOVE CEILING AND PROVIDE PULL STRING
$	SINGLE POLE SWITCH, ℄ AT 48 INCHES AFF UON
$F	SINGLE POLE SWITCH FOR FAN, ℄ AT 48 INCHES AFF UON
$D	DIMMER SWITCH, ℄ AT 48 INCHES AFF UON
$OS	OCCUPANCY SENSOR SWITCH, ℄ AT 48 INCHES AFF UON
OS	CEILING MOUNTED OCCUPANCY SENSOR, W/ NECESSARY POWER PACKS.

X5 Engineering, Inc.
MEP | Energy Analysis | Commissioning
PO Box 91743 Austin, TX 78709-1743 512.815.2959
www.X5Engineering.com TBPE FIRM F-17186

GUMBEAUX
CHERRY PEAK OFFICE PARK, BUILDING 4B
3503 WILD CHERRY ROAD, AUSTIN, TEXAS 78738

DOCUMENT RELEASED FOR INTERIM REVIEW
UNDER THE AUTHORITY OF MICHAEL R. SESTAK, P.E. 92683
DOCUMENT INCOMPLETE; DO NOT USE FOR BIDDING, PERMIT, OR CONSTRUCTION.

06/10/19

PROJECT NO.	19.05.00
DATE	06/10/2019
DRAWN BY:	MRS
REVISIONS:	

ELECTRICAL NOTES

E0.1

Light Fixture Schedule

SYMBOL	TYPE	MODEL	MANUF.	LAMP	NOTES
A	RECESSED	RDL4-35K-WP	WESTGATE	12 W/725 L/3500 K	1
B	UNDERCOUNTER	UCLD-24IN-35K-90CRI-WH	LITHONIA	12.5W/740L/3500K	1
C	VANITY	FMVCCLS-24IN-30K35K40K-90CRI-KR	LITHONIA	18W/1800L	1
E	EMERGENCY LIGHT	ELM2 LED	LITHONIA	2-1.5W	1
F	ATTIC LIGHT	#9860-BL WITH LAMP GUARD	LEVITON	13 W/GU-24	1
X	EXIT	EUS70R	SURE-LITES	1.3 W. LED EXIT SIGN	1

NOTES:
1. PROVIDE ALL HARDWARE AND ACCESSORIES FOR INSTALLATION IN CEILING OR WALL.

PANELBOARD L1

VOLTAGE: 120/240
BUS AMPS: 225
PHASE: 1
WIRE: 3

MAIN CIRCUIT BREAKER: 200
MAN LUGS ONLY: --
NEMA ENCLOSURE: NEMA 1
MOUNTING: SURFACE

CKT	DESCRIPTION	BREAKER AMPS	BREAKER POLES	LOAD RCPT (VA)	LOAD LIGHT (VA)	LOAD OTHER (VA)		LOAD RCPT (VA)	LOAD LIGHT (VA)	LOAD OTHER (VA)	BREAKER AMPS	BREAKER POLES	DESCRIPTION	CKT
1	FCU-1	60	2			13200		900			20	1	OFFICE 14 RCPTS	2
3	"	-	-			-		900			20	1	OFFICE 13 RCPTS	4
5	HP-1	30	2			NCL		180			20 GFCI	1	REFR	6
7	"	-	-			-		400			20	1	DISHWASHER	8
9	FCU-2	60	2			13200					20	1		10
11	"	-	-			-		900			20	1	RECEPTION RCPTS	12
13	HP-2	40	2			NCL		720			20	1	CONFERENCE RCPTS	14
15	"	-	-			-		720			20	1	CONFERENCE RCPTS	16
17	EWH-1	30	2			3900			24	80	20	1	**RR EXHAUST FANS/LIGHTS**	18
19	"	-	-			-			24	80	20	1	**RR EXHAUST FANS/LIGHTS**	20
21	EXTERIOR RCPTS	20	1	180					384		20	1	**WEST LIGHTS**	22
23	BEVERAGE FRIDGE	20	1	180					336		20	1	**EAST LIGHTS**	24
25	RESTROOM RCPTS	20	1	360					24		20	1	**EXTERIOR LIGHTS**	26
27	OFFICE 4 RCPTS	20	1	720				180			20	1	ATTIC RCPT	28
29	EXEC OFFICE 5 RCPTS	20	1	1080										30
31	EXEC OFFICE 15 RCPTS	20	1	1080										32
33	BREAKROOM RCPTS	20	1	180										34
35	BREAKROOM RCPTS	20	1	360										36
37	HALL 2 COUNTER RCPTS	20	1	360										38
39	HALL 2 COUNTER RCPTS	20	1	360										40
41	BEVERAGE FRIDGE	20	1	180										42

	CONNECTED (VA)	DEMAND (VA)
RECEPTACLES	9,940	9,940
LIGHTS	792	990
OTHER	30,460	30,460
TOTAL	41,192	41,390

DEMAND
172 AMPS

COM*check* Software Version 4.1.1.0

Exterior Lighting Compliance Certificate

Project Information

Energy Code: 2015 IECC
Project Title: Gumbeaux
Project Type: New Construction
Exterior Lighting Zone 2 (Neighborhood business district)

Construction Site:
3503 Wild Cherry Road
Building 4B
Austin, TX 78738

Owner/Agent:

Designer/Contractor:
Michael Sestak
X5Engineering
PO Box 91743
Austin, TX 78709
msestak@x5eng.com

Allowed Exterior Lighting Power

A Area/Surface Category	B Quantity	C Allowed Watts / Unit	D Tradable Wattage	E Allowed Watts (B X C)
Entry canopy	226 ft2	0.25	Yes	56
			Total Tradable Watts (a) =	56
			Total Allowed Watts =	56
			Total Allowed Supplemental Watts (b) =	600

(a) Wattage tradeoffs are only allowed between tradable areas/surfaces.
(b) A supplemental allowance equal to 600 watts may be applied toward compliance of both non-tradable and tradable areas/surfaces.

Proposed Exterior Lighting Power

A Fixture ID : Description / Lamp / Wattage Per Lamp / Ballast	B Lamps/ Fixture	C # of Fixtures	D Fixture Watt.	E (C X D)
Entry canopy (226 ft2): Tradable Wattage				
LED A: A: Othor:	1	2	12	24
			Total Tradable Proposed Watts =	24

Exterior Lighting PASSES: Design 96% better than code

Exterior Lighting Compliance Statement

Compliance Statement: The proposed exterior lighting design represented in this document is consistent with the building plans, specifications, and other calculations submitted with this permit application. The proposed exterior lighting systems have been designed to meet the 2015 IECC requirements in COM*check* Version 4.1.1.0 and to comply with any applicable mandatory requirements listed in the Inspection Checklist.

Name - Title Signature Date

Project Title: Gumbeaux Report date: 03/14/20
Data filename: D:\Dropbox\X5Engineering\Projects\20016 Gumbeaux\ComCheck\Gumbeaux Comcheck.cck Page 2 of 13

LOAD ANALYSIS

LOADS:

LIGHTING -	792 VA	X	1.25	=	990 VA
RECEPTACLES -	9940 VA				
<10,000 VA	9940 VA	X	1.00	=	9940 VA
>10,000 VA	0 VA	X	0.50	=	0 VA
OTHER -	30460 VA	X	1.00	=	30460 VA

TOTAL NEW CONNECTED LOAD = 41192 VA
NET CALCULATED DEMAND = 41390 VA
@ 120/240V 1 PH = 172 A

PROPOSED SERVICE IS 200A 120/240V 1 PH 3 WIRE.

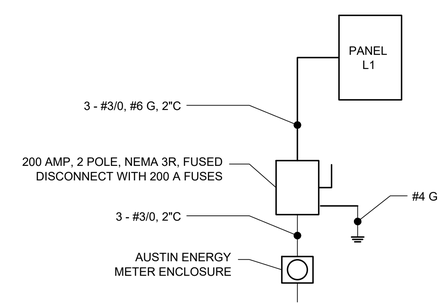

1 ELECTRICAL ONE-LINE DIAGRAM
SCALE: NTS

X5 Engineering, Inc.
MEP | Energy Analysis | Commissioning
PO Box 91743 Austin, TX 78709-1743 512.815.2959

GUMBEAUX
CHERRY PEAK OFFICE PARK, BUILDING 4B
3503 WILD CHERRY ROAD, AUSTIN, TEXAS 78738

DOCUMENT RELEASED FOR INTERIM REVIEW UNDER THE AUTHORITY OF MICHAEL R. SESTAK, P.E. 92683 DOCUMENT INCOMPLETE. DO NOT USE FOR BIDDING, PERMIT, OR CONSTRUCTION.

06/10/19

PROJECT NO. 19.05.00
DATE 06/10/2019
DRAWN BY: MRS
REVISIONS:

ELECTRICAL SCHEDULES & ONE-LINE
E0.2

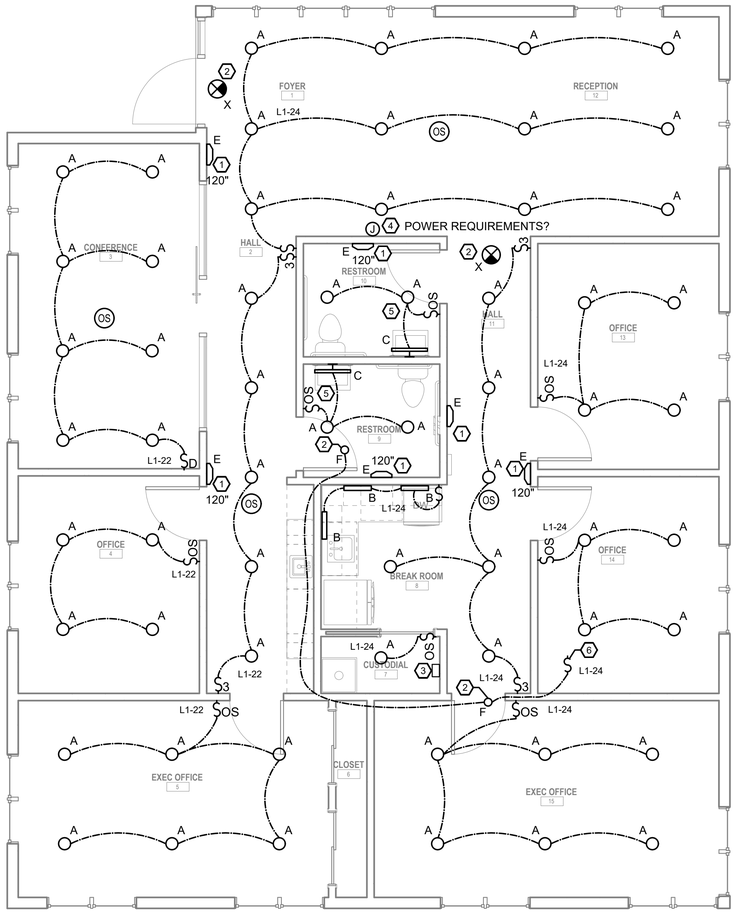

KEYED NOTES

1. CONNECT EMERGENCY LIGHTING TO NON-SWITCHED LIGHTING CIRCUIT IN AREA.
2. FIXTURE LOCATED IN ATTIC.
3. PROVIDE INTERMATIC MODEL ET90215CR TIME CLOCK OR EQUIVALENT FOR EXTERIOR LIGHTS. ROUTE EXTERIOR LIGHT CIRCUIT THROUGH TIMECLOCK.
4. INSTALL JUNCTION BOX TO SERVE SIGN. REFER TO ARCHITECTURAL PLANS FOR MOUNTING HEIGHT.
5. INTERLOCK LIGHTS WITH EXHAUST FAN.
6. LOCATE ATTIC LIGHT SWITCH IN ATTIC NEAR ATTIC ACCESS LADDER.

PLAN NORTH TRUE NORTH

2 LIGHTING PLAN

SCALE: 1/4" = 1'-0"

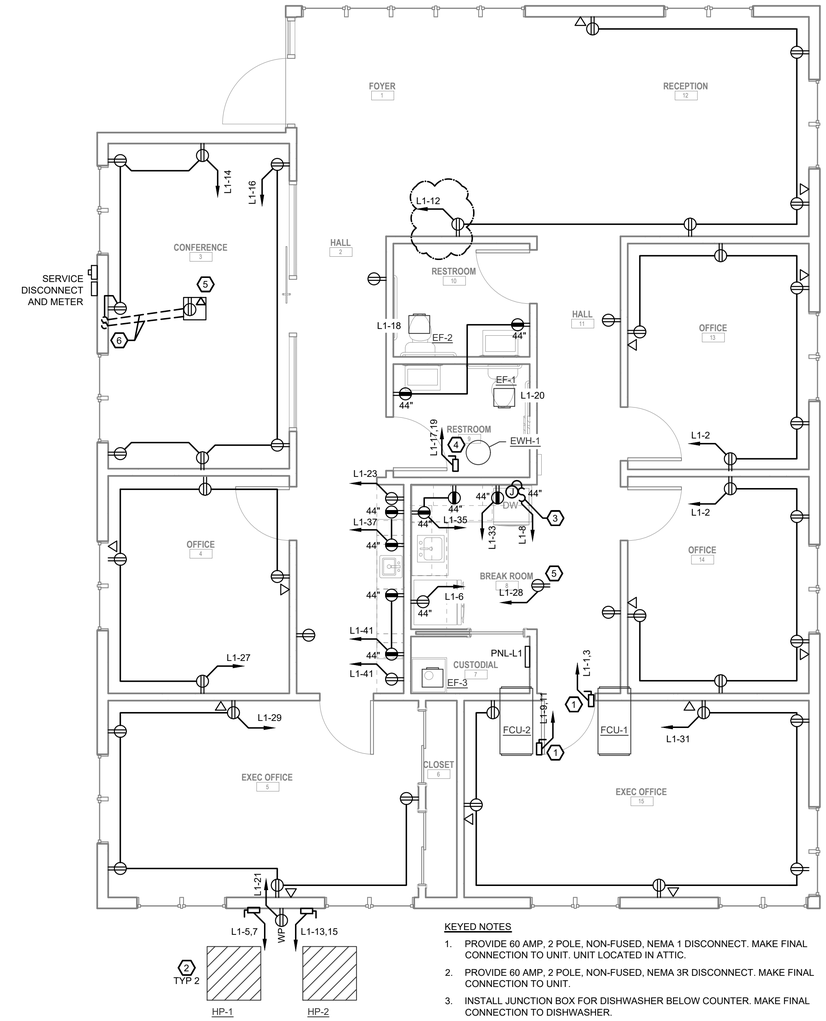

KEYED NOTES

1. PROVIDE 60 AMP, 2 POLE, NON-FUSED, NEMA 1 DISCONNECT. MAKE FINAL CONNECTION TO UNIT. UNIT LOCATED IN ATTIC.
2. PROVIDE 60 AMP, 2 POLE, NON-FUSED, NEMA 3R DISCONNECT. MAKE FINAL CONNECTION TO UNIT.
3. INSTALL JUNCTION BOX FOR DISHWASHER BELOW COUNTER. MAKE FINAL CONNECTION TO DISHWASHER.
4. PROVIDE 30 AMP, 2 POLE, NON-FUSED, NEMA 1 DISCONNECT. MAKE FINAL CONNECTION TO WATER HEATER. UNIT LOCATED IN ATTIC.
5. RECEPTACLE LOCATED IN ATTIC.
6. COORDINATE RECEPTACLE HEIGHT WITH OWNER BEFORE ROUGHIN.

PLAN NORTH TRUE NORTH

1 POWER PLAN

SCALE: 1/4" = 1'-0"

X5 Engineering, Inc.
MEP | Energy Analysis | Commissioning
PO Box 91743 Austin, TX 78709-1743 512.815.2959

GUMBEAUX

CHERRY PEAK OFFICE PARK, BUILDING 4B
3503 WILD CHERRY ROAD, AUSTIN, TEXAS 78738

DOCUMENT RELEASED FOR INTERIM REVIEW
UNDER THE AUTHORITY OF
MICHAEL R. SESTAK, P.E. 92683
DOCUMENT INCOMPLETE.
DO NOT USE FOR BIDDING, PERMIT, OR CONSTRUCTION.

06/10/19

PROJECT NO.	19.05.00
DATE	06/10/2019
DRAWN BY:	MRS
REVISIONS:	

POWER & LIGHTING PLAN

E1.1

PLUMBING GENERAL PROVISIONS

FURNISH AND INSTALL ALL NECESSARY EQUIPMENT AND DEVICES NECESSARY TO PROVIDE A FUNCTIONING SYSTEM. ELEMENT OF THE WORK TO INCLUDE BUT NOT LIMITED TO MATERIALS, LABOR, TRANSPORTATION, SUPPLIES, EQUIPMENT, HOISTING RIGGING, STORAGE, UTILITIES AND ALL REQUIRED PERMITS, LICENSES AND INSPECTIONS. ALL WORK TO COMPLY WITH 2017 NATIONAL ELECTRICAL CODE, 2015 UNIFORM PLUMBING CODE, 2015 INTERNATIONAL ENERGY CONSERVATION CODE, WCID 17 REQUIREMENTS AND ALL CODE ORDINANCE REQUIREMENTS OF AUTHORITY HAVING JURISDICTION. MODIFICATIONS TO THE CONTRACT DOCUMENTS REQUIRED BY THE AUTHORITY HAVING JURISDICTION SHALL BE DONE AT NO COST TO THE OWNER. WHERE THE CONTRACT DOCUMENTS ARE IN EXCESS OF CODE REQUIREMENTS, THE CONTRACT DOCUMENTS SHALL GOVERN. WHERE THE CODES ARE IN EXCESS OF CONTRACT DOCUMENTS, THE CODES SHALL GOVERN.

THE DRAWINGS ARE DIAGRAMMATIC IN CHARACTER AND GENERALLY INDICATE THE APPROXIMATE LOCATION OF DEVICES AND EQUIPMENT. DETAILS AND/OR DIMENSIONS MAY INDICATE EXACT LOCATION OF DEVICES AND EQUIPMENT. WHERE EXACT LOCATION OF DEVICES AND EQUIPMENT IS NOT INDICATED, LOCATION MUST BE DETERMINED IN THE FIELD IN COORDINATION WITH OTHER TRADES PERFORMING WORK ON THE PROJECT.

CONTRACTOR SHALL MAKE FIELD ADJUSTMENTS TO FINAL MEASUREMENTS TO INSURE PROPER INSTALLATION OF ALL EQUIPMENT AND DEVICES. ALL ADJUSTMENTS SHALL BE RECORDED IN AS-BUILT DOCUMENTS. CONTRACTOR SHALL COORDINATE WITH ALL OTHER TRADES PRIOR TO STARTING CONSTRUCTION. IF CONFLICTS ARISE DURING CONSTRUCTION IN RELATION TO OTHER TRADES THE CONTRACTOR IS TO PROVED ADDITIONAL MODIFICATIONS TO ROUTING AS REQUIRED TO RESOLVE CONFLICTS.

ALL WORK TO BE INSTALLED IN NEAT AND WELL ORGANIZED MANNER. ALL SERVICES TO BE RUN IN PARALLEL AND PERPENDICULAR TO BUILDING STRUCTURE LINES. ALL EQUIPMENT SHALL BE INSTALLED IN ACCESSIBLE LOCATIONS FOR PROPER OPERATION AND MAINTENANCE.

ALL EQUIPMENT AND MATERIALS TO BE UL OR ETL LISTED FOR THE INTENDED USE. ALL EQUIPMENT AND MATERIALS SHALL BE NEW, UNLESS OTHERWISE INDICATED IN THE CONTRACT DOCUMENTS. ANY EQUIPMENT AND MATERIALS FOUND TO BE DEFECTIVE TO BE REPLACED AT NO COST THE OWNER.

ALL EQUIPMENT, MATERIALS AND WORK SHALL BE PROTECTED FROM DAMAGE DURING CONSTRUCTION. ANY DAMAGE INCURRED DURING CONSTRUCTION, AND DEEMED UNACCEPTABLE TO THE OWNER AND ARCHITECT/ENGINEER, SHALL BE REPLACED AT NO ADDITIONAL COST. ALL OPEN ENDS OF WORK TO BE COVERED TO PROTECT FROM THE INFILTRATION OF DEBRIS. PROPERLY STORE ALL MATERIAL IN A LOCATION THAT IS PROTECTED AGAINST THE ELEMENTS, DAMAGE AND THEFT.

WHEN FLOOR AND SLAB IS SAW CUT TO INSTALL NEW PIPING OR TO GAIN ACCESS TO EXISTING PIPE. THE PLUMBING CONTRACTOR SHALL COORDINATE WITH THE GENERAL CONTRACTOR FOR PATCHING AND REPAIR OF FLOOR SLAB AND FINISH.

SUBMITTALS

SUBMITTALS AND SHOP DRAWINGS REQUIRED FOR ALL PRODUCT DATA. SHOP DRAWINGS REQUIRED FOR ALL ELECTRICAL ROOMS. OPERATIONS AND MAINTENANCE MANUALS AND AS-BUILT DRAWINGS REQUIRED AS PART OF CLOSE OUT DOCUMENTS. REFER TO ARCHITECT FOR ADDITIONAL SUBMITTAL REQUIREMENTS.

WARRANTY

GUARANTEE WORK FOR ONE YEAR FROM THE DATA FINAL ACCEPTANCE OF THE PROJECT. DURING THAT PERIOD MAKE GOOD ANY FAULTS OR IMPERFECTIONS THAT MAY ARISE DUE TO THE DEFECTS OR OMISSIONS IN MATERIAL OR WORKMANSHIP.

IDENTIFICATION AND LABELING

PLUMBING EQUIPMENT, SUCH AS PUMPS AND WATER HEATERS SHALL HAVE AN EXTERIOR ENGRAVED LAMINATE LABEL. LABEL SHALL HAVE 1/4 INCH LETTERS. LABEL SHALL INDICATE THE EQUIPMENT MARK AS INDICATED IN THE DOCUMENTS.

LABEL COLD WATER AND HOT WATER PIPING WITH ADHESIVE MARKERS IDENTIFYING THE PIPING SYSTEM. INSTALL MARKERS AT EVERY 25 FEET AND ON BOTH SIDES OF WALLS BEING PENETRATED BY PIPING.

PIPE INSULATION

FURNISH PRE-MOLDED GLASS FIBER PIPE INSULATION, WITH A PERMANENT K-FACTOR OF 0.23 BTU*IN./(H*SQ. FT.*°F) AT 75°F MEAN TEMPERATURE. FURNISH INSULATION WHICH IS 3 LB. PER CU. FT. DENSITY, WITH FACTORY-APPLIED, ALL-SERVICE REINFORCED VAPOR BARRIER JACKET, HAVING INTEGRAL LAMINATED ALUMINUM VAPOR BARRIER SEAL ALL CIRCUMFERENTIAL JOINTS WITH MINIMUM 3-INCH-WIDE BUTT STRIPS AND ADHESIVE COMPATIBLE WITH JACKET MATERIAL. COVER INSULATION WITH PVC JACKET IN LOCATIONS WHERE INSULATION COULD EASILY BE DAMAGED.

ALL 1/2" TO 1-1/4" HOT AND TEMPERED WATER PIPING <141°F TO BE INSULATED WITH 1" INSULATION.

ALL 1-1/4" TO 4" HOT AND TEMPERED WATER PIPING <141°F TO BE INSULATED WITH 1.5" INSULATION.

PIPES

DOMESTIC WATER PIPING TO BE PEX-A WATER PIPING. PEX-A PIPING SYSTEM TO BE DESIGNED BY MANUFACTURER AND INCLUDE ALL NECESSARY COMPONENTS FOR A FUNCTIONING SYSTEM.

WASTE AND VENT PIPING TO BE SCHEDULE 40 PVC JOINED WITH SOLVENT WELDS.

ALL PIPING INSTALLED BELOW FLOOR SHALL BE PROPERLY BEDDED IN WITH SAND PER 2015 UPC SECTION 314.4.

TESTING

FOR DOMESTIC WATER PIPING: TEST UNDER COLD WATER HYDROSTATIC PRESSURE OF 1½ TIMES OPERATING PRESSURE (150 PSIG MINIMUM) AND CAREFULLY CHECK FOR LEAKS. REPAIR ALL LEAKS AND RETEST SYSTEM UNTIL SYSTEM HOLDS FOR AT LEAST 24 HOURS AND PROVEN WATERTIGHT.

FOR SANITARY WASTE PIPING: TEST WITH NOT LESS THAN 10-FOOT HEAD OF WATER. MAINTAIN PRESSURE FOR 15 MINUTES.

STERILIZATION

STERILIZE THE MAIN WATER SYSTEM WITH SOLUTION CONTAINING NOT LESS THAN 50 PARTS PER MILLION AVAILABLE CHLORINE. ALLOW CHLORINATING SOLUTION TO REMAIN IN SYSTEM FOR PERIOD OF 8 HOURS. AFTER STERILIZATION, FLUSH THE SOLUTION FROM THE SYSTEM WITH CLEAN WATER UNTIL RESIDUAL CHLORINE CONTENT IS LESS THAN 0.2 PARTS PER MILLION.

WATER HEATER SCHEDULE

MARK	STORAGE GALLONS	RECOVERY		ELECTRICAL			SETPOINT °F	MANUFACTURER AND MODEL
		GALS/HOUR	TEMP. RISE °F	KW	VOLTS	PHASE		
EWH-1	19	21	90	3.9	240	1	140	RHEEM PROE20 S2 RH

NOTES:
1. MINIMUM EFFICIENCY OF 0.86 EF.
2. PROVIDE AMTROL THERM-X-TROL ST-5-C PRECHARGED EXPANSION TANK.
3. COORDINATE POWER REQUIREMENTS WITH ELECTRICAL CONTRACTOR.
4. PROVIDE WITH 6 YEAR TANK AND PARTS WARRANTY.

PLUMBING FIXTURE SCHEDULE

MARK	DESCRIPTION	BASIS OF DESIGN		CONNECTION				NOTES
		MANUF.	MODEL	CW	HW	W	V	
LAV-1	RECTANGULAR WALL MOUNTED, ONE HOLE, CERAMIC WHITE ADA SINK. INCLUDES OVERFLOW AND 1.25" DRAIN.	NAMEEK MONA CERASTYLE	064400-U					
	TOUCHLESS SINGLE-HOLE MOUNT FAUCET, 0.5 GPM FLOW RATE, POLISHED CHROME FINISH, AC POWERED. PROVIDE AC SINGLE SUPPLY	KOHLER	K-13468					
	1-1/4" POLISHED CHROME PLATED BRASS VANDAL PROOF GRID DRAIN ASSEMBLY AND TAILPIECE							
	LAV-GUARD, BELOW LAVATORY, INSULATION KIT.	TRUBRO	MODEL NO. 102W					
	FURNISH CONDENSATE TAILPIECE WHERE INDICATED ON DRAWINGS							
	FURNISH IN LINE HOT AND COLD WATER CHECK VALVES.	SYMMONS	4 10(B)	1/2	1/2	2	2	1, 3
WC-1	WATER CLOSET, PROVIDE RIGHT OR LEFT HAND FLUSH LEVER AS REQUIRED, 1.28 GAL. FLUSH, VITREOUS CHINA, ELONGATED BOWL, COLOR:	KOHLER	KOHLER K-3575-0					
	OPEN FRONT SEAT TO MATCH TOILET COLOR.	KOHLER	KOHLER K-4666-C	1/2	-	4	2	1, 2
SK-1	UNDERMOUNT SINGLE COMPARTMENT SINK, 30-1/2" X 18-1/2" X 5-3/8" DEEP, 18 GAUGE, 304 STAINLESS STEEL , UNDERSIDE FULLY COATED W/	ELKAY	ELUHAD281655PD					
	1-1/2 IN. ADJUSTABLE CAST BRASS P-TRAP WITH TUBING DRAIN TO WALL, GROUND SWIVEL JOINT, CLEAN OUT PLUG AND CAST BRASS ESCUTCHEON, ALL WITH POLISHED CHROME FINISH.	MCGUIRE	B8912.					
	LAV-GUARD INSULATION KIT W/ ALL NECESSARY ACCESSORIES.	TRUEBRO	102W	1/2	1/2	2	2	1, 3
	SINGLE HANDLE DECK MOUNTED FAUCET WITH PULLDOWN SPRAYER.	MOEN	S72308SRS	1/2	1/2	2	2	1
SK-2	SELF RIMMING, SINGLE COMPARTMENT, 15 IN. X 17-1/2 IN. X 6 IN. DEEP, 18 GAGE TYPE 304 STAINLESS STEEL SINK WITH 1 FAUCET HOLE AND FULLY UNDERCOATED UNDERSIDE.	ELKAY	LRAD151760					
	1-1/2 IN. ADJUSTABLE CAST BRASS P-TRAP WITH TUBING DRAIN TO WALL, GROUND SWIVEL JOINT, CLEAN OUT PLUG AND CAST BRASS ESCUTCHEON, ALL WITH POLISHED CHROME FINISH.	MCGUIRE	B8912.					
	SINGLE HANDLE DECK MOUNTED FAUCET WITH PULLDOWN SPRAYER.	MOEN	S72308SRS	1/2	1/2	2	2	1
WB-1	ICE MAKER BOX WITH 1/4 TURN BRASS BALL VALVE. INSTALL AT ¢ AT 18"	OATEY	38574	1/2	-	-	-	
MS-1	FLOOR MOUNTED SERVICE BASIN 24"X24"X10"; ONE PIECE DURASTONE CONSTRUCTION, INTEGRALLY MOLDED CENTER DRAIN WITH SEAL.	MUSTEE	63M					
	FAUCET: HEAVY DUTY, CHROME PLATED BRASS DUAL HANDLE SINK FAUCET WITH TOP REINFORCING BAR AND PAIL HOOK ON SPOUT. VACUUM BREAKER INTEGRAL STOPS, CHROME PLATED HOT AND COLD HANDLES. 3/4" HOSE END SPOUT WITH PAIL HOOK, TOP REINFORCING BAR AND	MUSTEE	63.600A					
	HOSE & HOSE HOLDER: HEAVY DUTY 5/8" DIA. REINFORCED 31" RUBBER HOSE WITH BRASS COUPLINGS ON ONE END. SPRING LOADED, MOLDED RUBBER HOSE HOLDER MOUNTS ON STAINLESS STEEL WALL PLATE.	MUSTEE	65.700					
	MOP HANGER: THREE SPRING-LOADED RUBBER HOLDERS MOUNTED TO A 3" X 24" STAINLESS STEEL WALL PLATE.	MUSTEE	65.600					
	WALL GUARDS: PROTECTS WALL SURFACES FROM SPLASHING AND DAMAGE FROM IMPACTS, 12" HEIGHT, 20 GAUGE #304 STAINLESS STEEL.	MUSTEE	67.2424	1/2	1/2	3	2	1
WH-1	FREEZLESS WITH VACUUM BREAKER ANTI SIPHON. VERIFY WALL	WOODFORD	19	3/4	-	-	-	

NOTES:
1. PROVIDE TRAPS, TAIL PIECES, RISERS, QUARTER TURN STOPS AND FIXTURE CARRIERS FOR COMPLETE INSTALLATION.
2. PROVIDE FLOOR FLANGE, QUARTER TURN STOPS AND RISER REQUIRED FOR COMPLETE INSTALLATION.
3. REFER TO ARCHITECT PLANS FOR MOUNTING HEIGHTS.

PLUMBING ABBREVIATIONS

A	AMPERES	IN	INCHES
ABV	ABOVE	INSUL	INSULATION, INSULATE
AD	ACCESS DOOR	L	LONG, LENGTH
AFF	ABOVE FINISHED FLOOR	MAX	MAXIMUM
AFG	ABOVE FINISHED GRADE	MIN	MINIMUM
AV	ACID VENT	MTD	MOUNTED
AW	ACID WASTE	MTG HT	MOUNTING HEIGHT
BA VA	BALL VALVE	NIC	NOT IN CONTRACT
BAS	BUILDING AUTOMATION SYSTEM	NTS	NOT TO SCALE
BF VA	BUTTERFLY VALVE	PH	PHASE
BFF	BELOW FINISHED FLOOR	RA	RETURN AIR
BLW	BELOW	RD	ROOF DRAIN, ROOF DRAIN LEADER
BTUH	BRITISH THERMAL UNITS / HOUR	RED	REDUCER
CO	CLEANOUT	REQ'D	REQUIRED
CONT	CONTINUATION	RPZ	REDUCED PRESSURE ZONE
COORD	COORDINATE	SP	STATIC PRESSURE, IN. H2O
CW	DOMESTIC COLD WATER	SS	SANITARY SEWER BELOW GRADE
D	CONDENSATE DRAIN LINE, EQUIP. DRAIN	SS	STAINLESS STEEL
DEG F	DEGREES FAHRENHEIT	SW	SOFT WATER
DIA	DIAMETER	T&P	TEMPERATURE / PRESSURE RELIEF VALVE
DN	DOWN	TEMP	TEMPERATURE
DFCO	DOUBLE FLOOR CLEANOUT	THK	THICK, THICKNESS
DYCO	DOUBLE YARD CLEANOUT	TSTAT	THERMOSTAT
ETR	EXISTING TO REMAIN	TP	TRAP PRIMER
EFF	EFFICIENCY	TW	TEMPERED WATER
ELECT	ELECTRICAL	TYP	TYPICAL
EOD	EMERGENCY OVERFLOW DRAIN	UF	UNDER FLOOR
EQUIP	EQUIPMENT	UG	UNDER GROUND
F&I	FURNISH AND INSTALL	UON	UNLESS OTHERWISE NOTED
FCO	FLOOR CLEANOUT	V	SANITARY VENT
FD	FLOOR DRAIN	V	VOLT
FDC	FIRE DEPARTMENT CONNECTION	W	WATT
FS	FLOOR SINK	W	WIDE, WIDTH
FT	FEET	W	SANITARY SOIL/WASTE
G	GAS	W/	WITH
GA VA	GATE VALVE	WCO	WALL CLEANOUT
GV	GREASE VENT	WG	WATER GAGE
GW	GREASE WASTE	WHA	WATER HAMMER ARRESTOR
HW	DOMESTIC HOT WATER		
HWR	DOMESTIC HOT WATER RETURN		

PLUMBING LEGEND

	BALL VALVE
	BUTTERFLY VALVE
	CHECK VALVE
	GATE VALVE
	GLOBE VALVE
	PLUG VALVE
	PRESSURE REGULATING VALVE
	SOLENOID VALVE
	STRAINER W/ BLOW DOWN VALVE
	TEMPERATURE/ PRESSURE RELIEF VALVE
	VALVE IN VERTICAL
	WALL HYDRANT OR HOSE BIB
	DOMESTIC COLD WATER
	DOMESTIC HOT WATER
	DOMESTIC HOT WATER RETURN
	SANITARY SEWER
	SANITARY VENT
	DIRECTION OF FLOW
	PIPE SIZE REDUCER
	CLEANOUT
	P-TRAP
	FLANGE CONNECTION
	UNION
	ELBOW TURNING DOWN
	ELBOW TURNING UP
	POINT OF CONNECTION TO EXISTING

X5 Engineering, Inc.
MEP | Energy Analysis | Commissioning
PO Box 91743 Austin, TX 78709-1743 512.815.2959
www.X5Engineering.com TBPE FIRM F-17166

GUMBEAUX
CHERRY PEAK OFFICE PARK, BUILDING 4B
3503 WILD CHERRY ROAD, AUSTIN, TEXAS 78738

DOCUMENT RELEASED FOR INTERIM REVIEW
UNDER THE AUTHORITY OF
MICHAEL R. SESTAK, P.E. 92683
DOCUMENT INCOMPLETE.
DO NOT USE FOR BIDDING, PERMIT, OR CONSTRUCTION.

06/10/19

PROJECT NO. 19.05.00
DATE 06/10/2019
DRAWN BY: MRS
REVISIONS:

PLUMBING NOTES & SCHEDULES

P0.1

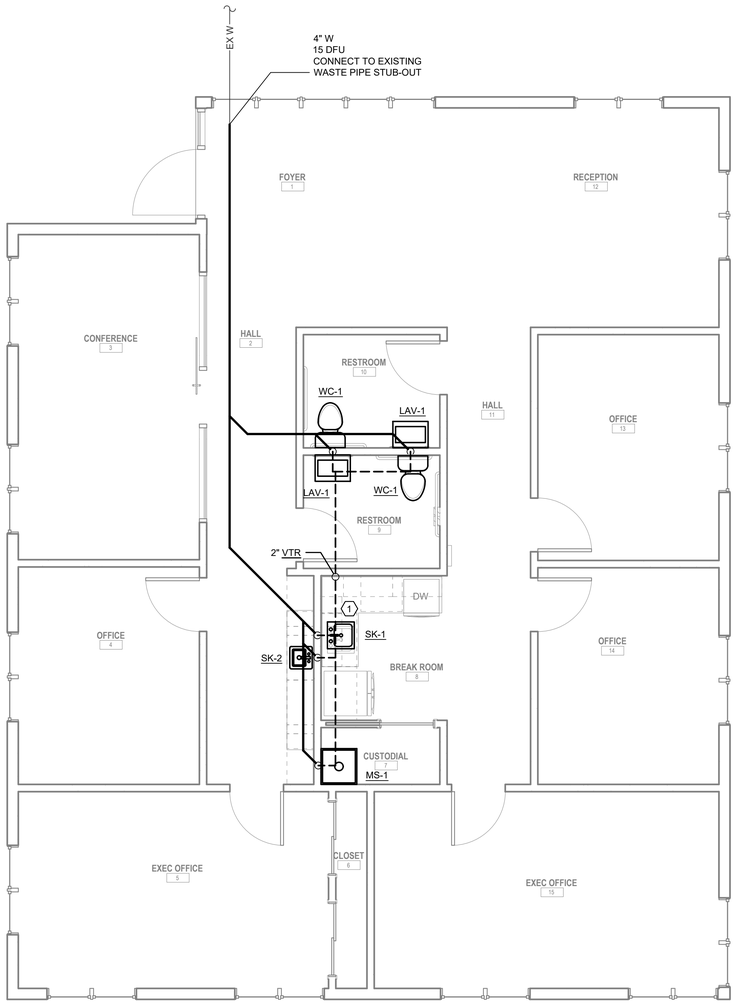

KEYED NOTES

1. PROVIDE WASTE CONNECTION FOR DISHWASHER. MAKE FINAL CONNECTIONS TO DISHWASHER.

PLAN NORTH

TRUE NORTH

2 WASTE & VENT PLUMBING PLAN

SCALE: 1/4" = 1'-0"

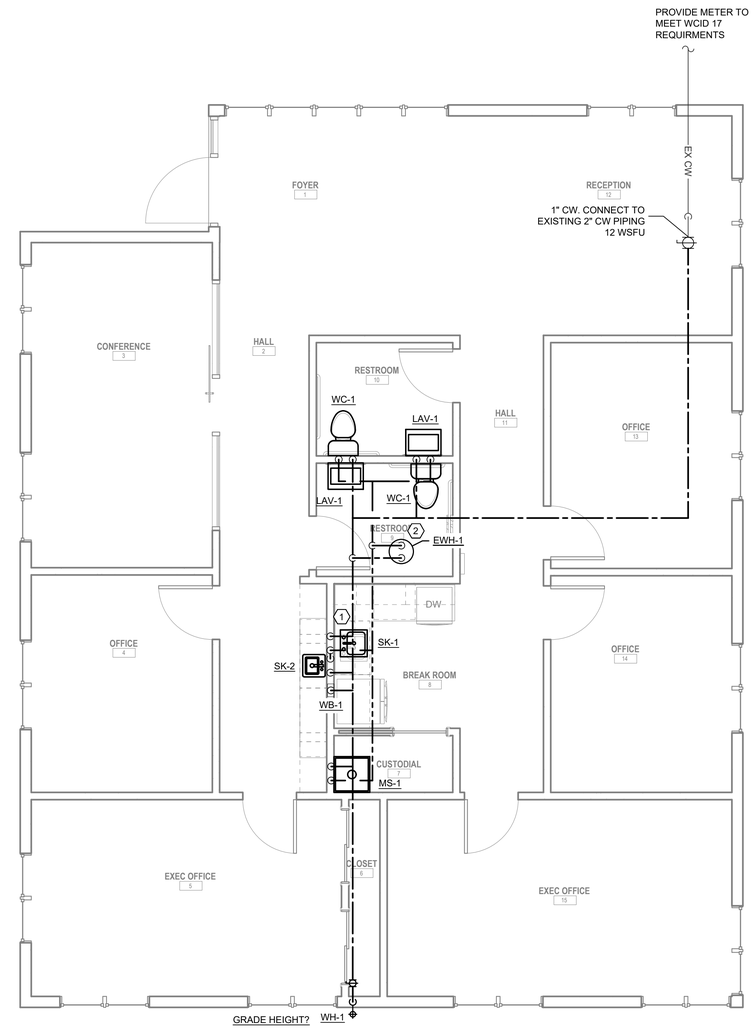

KEYED NOTES

1. PROVIDE HW CONNECTION FOR DISHWASHER. MAKE FINAL CONNECTIONS TO DISHWASHER.
2. EWH-1 LOCATED IN ATTIC.

PLAN NORTH

TRUE NORTH

1 DOMESTIC WATER PLUMBING PLAN

SCALE: 1/4" = 1'-0"

X5 Engineering, Inc.

MEP | Energy Analysis | Commissioning

PO Box 91743 Austin, TX 78709-1743 512.815.2959

www.X5Engineering.com TBPE FIRM F-17166

GUMBEAUX

CHERRY PEAK OFFICE PARK, BUILDING 4B
3503 WILD CHERRY ROAD, AUSTIN, TEXAS 78738

DOCUMENT RELEASED FOR INTERIM REVIEW
UNDER THE AUTHORITY OF
MICHAEL R. SESTAK, P.E. 92683
DOCUMENT INCOMPLETE.
DO NOT USE FOR BIDDING,
PERMIT, OR CONSTRUCTION.

06/10/19

PROJECT NO.	19.05.00
DATE	06/10/2019
DRAWN BY:	MRS
REVISIONS:	

PLUMBING PLAN

P1.1

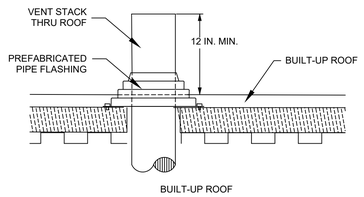

6 VENT THRU ROOF
SCALE: NTS

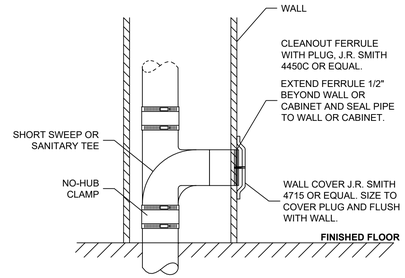

5 WALL CLEANOUT
SCALE: NTS

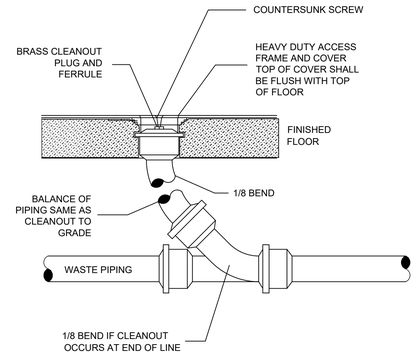

4 FLOOR CLEANOUT
SCALE: NTS

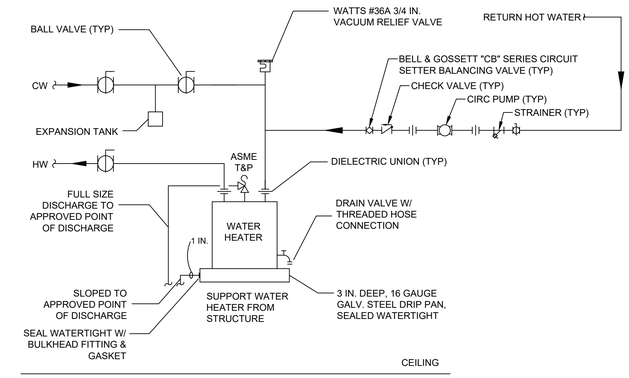

3 ABOVE CEILING MOUNTED ELECTRIC WATER HEATER
SCALE: NTS

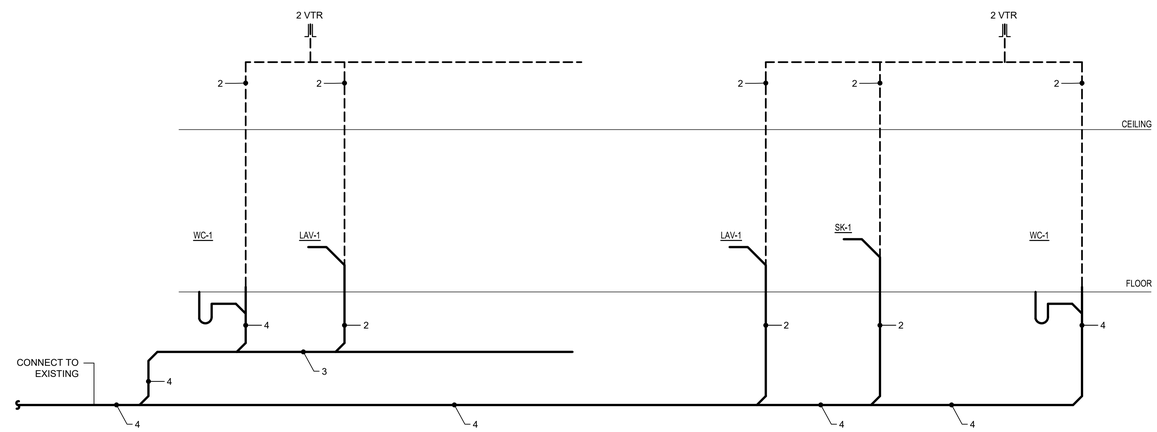

2 WASTE & VENT PLUMBING RISER
SCALE: NTS

WATER SUPPLY FIXTURE AND DRAINAGE FIXTURE UNIT COUNT					
MARK	QUANTITY	WSFU PER FIXT.	TOTAL WSFU	DFU PER FIXT.	TOTAL DFU
MS	1	3	3	3	3
WC	2	2.5	5	4	8
LAV	2	1	2	1	2
SK	2	2	4	2	4
		TOTAL	14	TOTAL	17
		GPM	17		

NOTES:
1. FIXTURE UNITS CALCULATED PER APPENDIX A OF 2015 UPC.

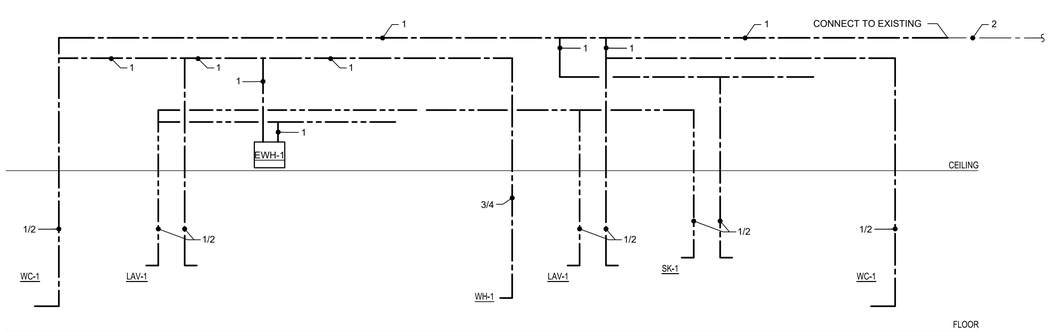

1 DOMESTIC WATER PLUMBING RISER
SCALE: NTS

X5 Engineering, Inc.
MEP | Energy Analysis | Commissioning
PO Box 91743 Austin, TX 78709-1743 512.815.2959

www.X5Engineering.com TBPE FIRM F-17166

GUMBEAUX
CHERRY PEAK OFFICE PARK, BUILDING 4B
3503 WILD CHERRY ROAD, AUSTIN, TEXAS 78738

DOCUMENT RELEASED FOR INTERIM REVIEW UNDER THE AUTHORITY OF MICHAEL R. SESTAK, P.E. 92683 DOCUMENT INCOMPLETE. DO NOT USE FOR BIDDING, PERMIT, OR CONSTRUCTION.

06/10/19

PROJECT NO. 19.05.00
DATE 06/10/2019
DRAWN BY: MRS
REVISIONS:

PLUMBING - DETAILS & RISERS
P2.1