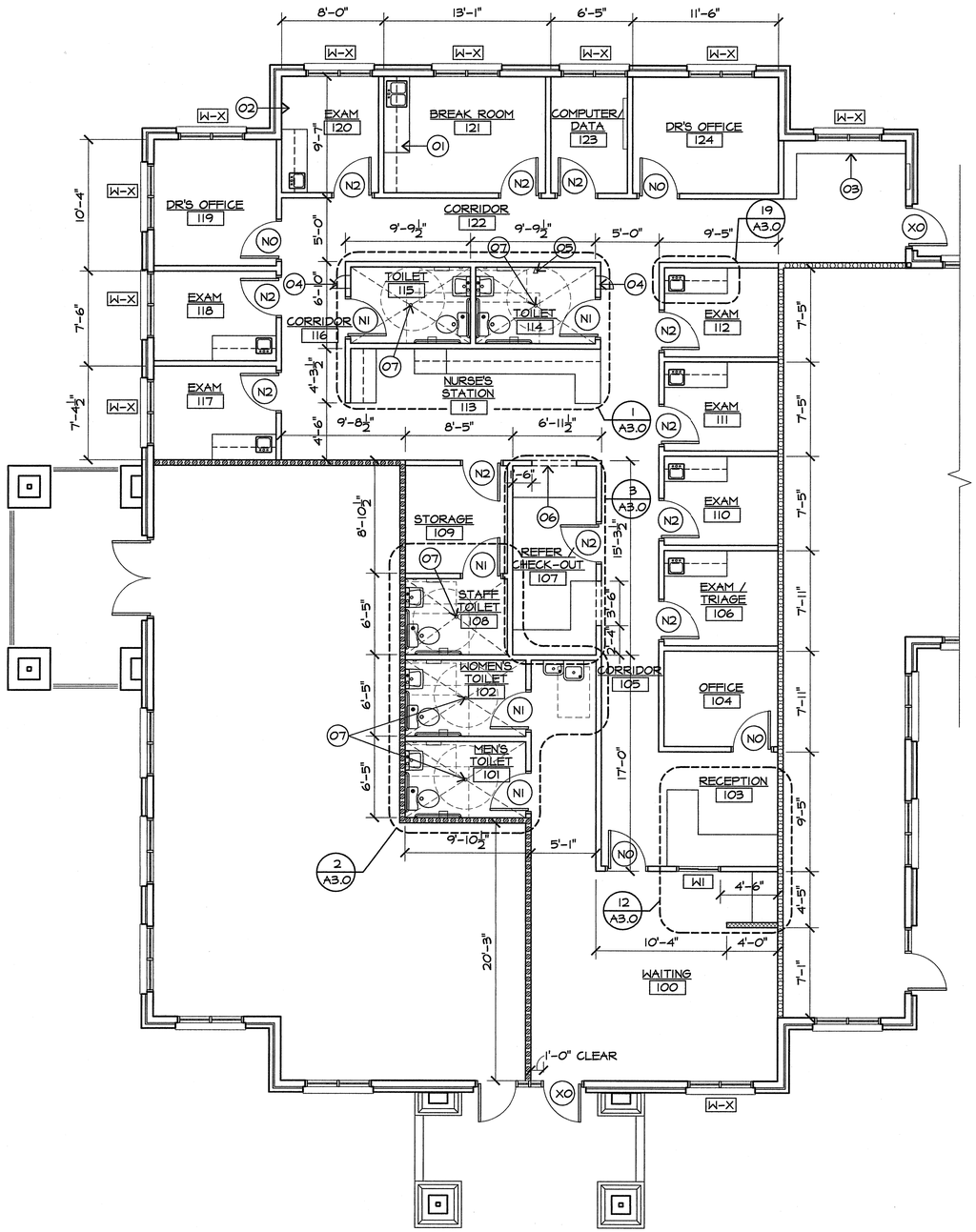

1 A1.0 FLOOR PLAN
SCALE: 3/16" = 1'-0"

PLAN LEGEND

- XI — EXISTING DOOR TO REMAIN "DOOR TO REMAIN UNLATCHED DURING OPERATION HOUR" - LEGIBLE NOTE SIGNAGE NEAR THUB LATCH.
- XO — EXISTING DOOR TO REMAIN CONTRACTOR SHALL VERIFY EXISTING EMERGENCY/ PANIC HARDWARE PER CODE COMPLIANCE
- N# — NEW DOOR - SEE DOOR SCHEDULE
- W-X — EXISTING WINDOW TO REMAIN
- WI — NEW WINDOW - SEE WINDOW ELEVATION ON A2.0
- EXISTING 1 HOUR FIRE RATED SEPARATION WALL
- NEW 1 HOUR FIRE RATED SEPARATION WALL - SEE 5/A4.0 FOR DETAIL
- NEW INTERIOR PARTION WALL - SEE 2/A4.0 FOR DETAIL
- NEW INTERIOR PARTION LOW WALL - SEE 6/A4.0 FOR DETAIL

KEY NOTE LEGEND

- 01 — 6' LONG STANDARD GRADE CABINETRY
- 02 — 5' LONG STANDARD GRADE CABINETRY AT EXAM. ROOM (TYP.) - WALL MOUNTED CABINET WILL BE HALF OPEN AND HALF CLOSE W/ DOOR (TYP.)
- 03 — WALL MOUNTED SHELVING
- 04 — 12"x12" PASS THROUGH BOX @ 3'-0" A.F.F
- 05 — SHOWER HEAD
- 06 — 3'-6"W x 3'-0"H CASE OPENING - SEE INTERIOR ELEVATIONS ON A3.0
- 07 — FLOOR DRAIN

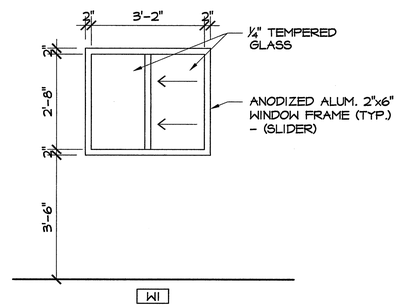

2 A1.0 INTERIOR SLIDING WINDOW ELEV.
SCALE: 1/2" = 1'-0"

The scale as stated, is valid only on original drawing.

Architectural Design Concept, LLC
Architecture | Planning | Interiors
8601 Dunwoody Place, Suite 102.
Sandy Spring, GA 30350
Office Tel: (678) 387-2225 Fax: (678) 387-2224
www.adc-architects.com

This drawing is the property of the Architectural Design Concepts and is not to be reproduced or copied in whole or in part. It is to be used only for the project and site specified herein, and is not to be used by any other consultant or on any other project. This drawing is to be returned to Architectural Design Concepts upon request.

SEAL

STATE OF GEORGIA
BRADLEY SCOTT SKAGGS
CERTIFICATE NO. 0001898
REGISTERED ARCHITECT

REVISIONS

No.	Date	Description

PRINTING

Date	Description

COVENANT FAMILY MEDICINE, LLC

2098 TERON TRACE, SUITE 100
DACULA, GA 30019

CLIENT: HENRY MOON& RENE LATONI: 1655 LEBANON RD. SUITE A
LAWRENCEVILLE, GA 30043

KEY PLAN

DATE	OCTOBER 18, 2006
DRAWN:	STAFF
CHECKED:	B. SKAGGS
JOB NO.:	06-24

TITLE
FLOOR PLAN

SHEET NUMBER
A1.0

RELEASED FOR CONSTRUCTION

FILE: