DESIGN NOTES:

This is to certify that the following project has been designed in accordance with the 2018 IBC

for the following loads and deflections:

COMMON DATA:

Building Code	=	2018 IBC
Building Occupancy	=	II – Normal
Wind Speed, Vult	=	106.00 mph
Wind Speed, Vasd	=	82.11 mph
Ground Snow, Pg	=	5.0000 psf
Roof Snow, Pf	=	3.5000 psf
Importance	=	1.0000
Seismic		
Design Category	=	A
Importance	=	1.0000
Site Class	=	d
Analysis Procedure	=	Equivalent Lateral Force

PROJECT DIMENSIONS

PROJECT:	WIDTH (ft)	LENGTH (ft)	HEIGHT (ft)	PITCH	POROSITY & Cpi
A	68	62	21	2.0:12	
B	80	175	24	2.0:12	

PROJECT LOADING (Building Specific)

PROJECT:	DEAD (psf)	LIVE (psf)	Coll. (psf)	SNOW (psf)	SNOW DRIFT
A	2.000	20.00	0.5	3.5000	47.36 psf and 12.93 ft
B	2.000	20.00	0.5	3.5000	

SEISMIC VALUES

PROJECT	Ss	S1	Sds	Sd1	Cs (long.)	Cs (trans)	Long. SFRS	Trans. SFRS	R_long	R_trans
A	0.1129	0.0318	0.1195	0.0496	0.04	0.04	OSMF	OSCBF	3	3
B	0.1129	0.0318	0.1195	0.0496	0.04	0.04	OSMF	OSMF	3	3

Drawing Status:

☐ FOR APPROVAL:
THESE DRAWINGS, BY DEFINITION, ARE NOT FINAL, AND ARE FOR CONCEPTUAL USE ONLY. THEIR PURPOSE IS TO CONFIRM PROPER INTERPRETATION OF PROJECT DOCUMENTS. ONLY DRAWINGS ISSUED "FOR CONSTRUCTION" CAN BE CONSIDERED COMPLETE.

☐ FOR PERMIT:
THESE DRAWINGS, ARE FOR PERMIT USE ONLY, AND AS SUCH, PIECE MARKS MAY NOT BE IDENTIFIED. ONLY DRAWINGS LABELED "FOR CONSTRUCTION" CAN BE CONSIDERED COMPLETE.

☒ FOR CONSTRUCTION:
FINAL DRAWINGS.

DRAWING INDEX

PAGE ID	DESCRIPTION
C1 of 2	Drawing Cover
C2 of 2	General Notes
A1 – A5	Anchor Bolt Plan/Details
E1 – E2	Roof Framing/Sheeting
E3 – E6	Endwall Framing/Sheeting
E7 – E11	Sidewall Framing/Sheeting
E12 – E22	Rigid Frame Drawings
E23 – E23	Partition Walls
E24 – E31	Crane Drawings
E32 – E34	Mezzanine Drawings
---	Jack Beams
E35 – E38	Wall/Roof Insulation
E39 – E39	Wall/Roof Liner Panels
E40 – E53	Wind Brace
E54 – E55	Details

PANELS/INSULATION

Roof Panels:	PBR		
Roof Insulation:	VR	Thick. 3	in.
Wall Panels:	PBR		
Wall Insulation:	VR	Thick. 3	in.

DEFLECTION LIMITS

EW COLUMN	H/180
EW RAFTER	L/180
GIRT (live)	L/90
PURLIN (live)	L/180
PANEL (live)	L/60
FRAME COLUMN	H/60
FRAME RAFTER	L/180

BUILDING COLORS

ROOF	Polar White
WALL	Desert Sand
EAVE	Dark Bronze
RAKE	Dark Bronze
JAMB	Dark Bronze
CORNER	Dark Bronze
BASE	Dark Bronze
GUTTER	--

ADDITIONAL NOTES:

BUILD IT WITH STEEL
BUILD IT TO LAST
JNL
STEEL COMPONENTS, INC.

430 US Hwy 180 West Seminole, TX 79360
(432) 758-9900 (432) 758-9903 (fax)

SALES PERSON: BOBBY NEUFELD

REV.	DATE	REVISION
△		
△		
△		
△		
△		

PURCHASER:

PROJECT: SHARP OILFIELD SERVICES

JOB NUMBER: PB50554

JOB ADDRESS:

ODESSA TEXAS 79763

General Notes

This drawing, and all information contained within, remains the property of JNL Steel. The building shall be erected using members called out in this drawing.

In the event that the design changes, it is the responsibility of the contractor to ensure that a stamped letter from the sealing engineer is provided, giving the approval.

3000 psi concrete is assumed for all calculations involving concrete strength.

Anchor Bolts

The anchor bolt diameters are determined in accordance with AISC using A307 anchors. Anchor bolt lengths are to be determined by a foundation engineer, and as such, cannot be provided with the building. It is the responsibility of the erector to purchase anchor bolts separately and no liability will be placed on JNL Steel or the stamping engineer for incorrect anchor bolt lengths.

Field Work

Minimal field work is expected with erecting metal buildings. If a customer does not tell JNL where to place an opening, we will "field locate" the building and it is the erectors responsibility to drill holes in the girt and place the opening. All field welding should be done by a certified welder in accordance with AWS D1.1.

Structural Bolts

Bolts not subject to tension or vibration loads should only be snug tightened. Bolts in slotted connections should be hand tightened with the thread damaged afterwards to prevent nut from backing out. This allows for vertical deflection of the connecting member. ASTM A307 bolts are used for girt to frame, purlin to frame,and all flange bracing connections unless noted. ASTM A325 are used everywhere else unless noted. Threads are assumed in the shear plane.

Material Delivery

JNL will attempt to deliver the building on an agreed upon date. Sometimes, through un-forseen events, this cannot be possible. JNL does not accept responsibility for costs associated with the customer renting personnel or equipment to unload the truck. Responsibility to unload the truck is placed on the customer, unless specifically stated in the contract.

Approval Drawings

Approval drawings are meant to show the erector general building geometry, framed opening locations, and clearances. If member sizes appear on drawings, they are not supposed to be taken as true size. Customer shall sign all pages of the approval drawings and return to JNL before building gets sent to stamping engineer. To ensure current pricing, approval drawings will need to be signed within (2) weeks of issue.

Contracts

Customer should review the contract thoroughly and make sure everything is clear and accounted for. Customer is responsible for supplying JNL with the appropriate design code. In the event that such data is not made available, customer should call the local building official. JNL or the stamping engineer will not be held liable for incorrect building codes. Building will not get sent to stamping engineer without a signed contract. Verbal confirmation over email,phone, or in-person will not be accepted.

Material Specifications

Hot Rolled: A992 Gr. 55
HSS: ASTM A500 Gr. 46
Built up Webs: A36
Built up Flanges: A529 Gr. 55
Cold Formed: ASTM A1011 Gr. 55

Diagonal Bracing:	Rod brace yield stress is 36 ksi Steel cable is extra high strength per ASTM A475
Bolts:	Secondary member bolts conform to ASTM A307 (U.N.) Primary Members conform to ASTM A325 (U.N.)

Material Storage

Panels should be placed off the ground and slopped enough to provide good drainage. Board should be placed at close enough intervals to prevent the panels from sagging and resulting in water accumulation. Galvanized, and colored materials are subject to corrosion and discoloration if stored improperly.

Bracing

Bracing is an integral part of the building system. All bracing should be installed taut and free of slack. Walls utilizing panel shear should have temporary bracing until all panels are installed. During erection, contractor should install temporary bracing to provide stability, and help square the building. Do not remove bracing due to "inconvenience". If bracing needs to be moved/removed, contact a licensed professional for approval.

BUILD IT WITH STEEL BUILD IT TO LAST
JNL
STEEL COMPONENTS, INC.
432-758-9900
430 US HWY 180 W
SEMINOLE,TX 79360

CUSTOMER INFO

PROJECT
PB50554
SHARP OILFIELD SERVICES
ODESSA TEXAS 79763

SHEET NAME/TITLE
General Notes

DRAWN BY PP DATE
CHECKED BY DATE
APPROVED BY . DATE

SHEET NO. C2 of 2 REV. -- SCALE NTS

REVISIONS

NO.	NOTES	BY	DATE
--	--	--	00-00-00

JNL Steel Components, Inc

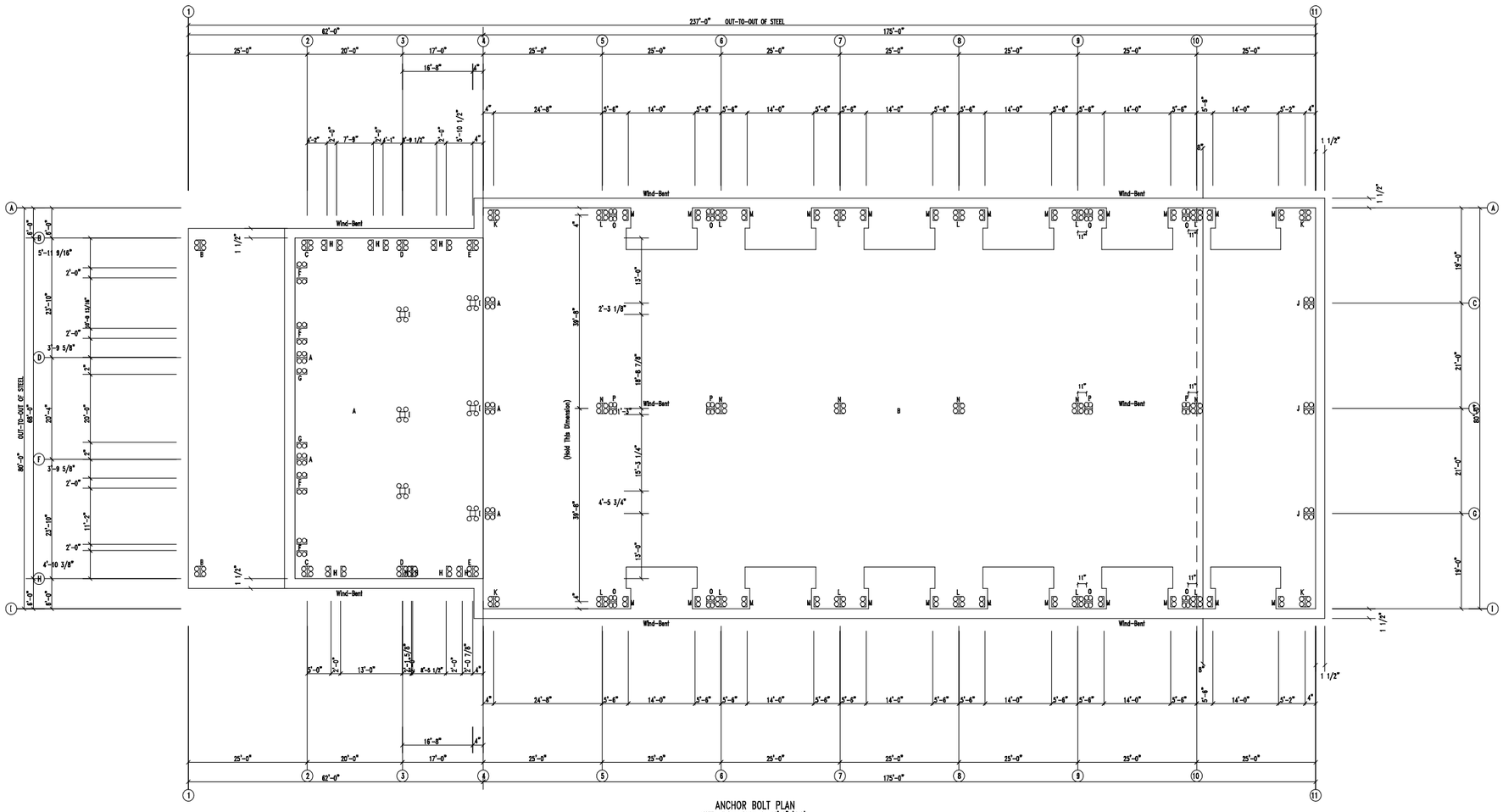

ANCHOR BOLT PLAN

NOTE: All Base Plates @ 100'-0" (U.N.)

BUILD IT WITH STEEL BUILD IT TO LAST

JNL STEEL COMPONENTS, INC.

432-758-9900
430 US HWY 180 W
SEMINOLE,TX 79360

CUSTOMER INFO

PROJECT
PB50554

SHARP OILFIELD SERVICES
ODESSA TEXAS 79763

SHEET NAME/TITLE
ANCHOR BOLT PLAN

DRAWN BY	DATE
BN	4/19/23
CHECKED BY	DATE
BN	4/19/23
APPROVED BY	DATE
.	4/19/23

SHEET NO.	REV.	SCALE
E1 of 45 --		NTS

REVISIONS

NO.	NOTES	BY	DATE
--	--	--	00-00-00

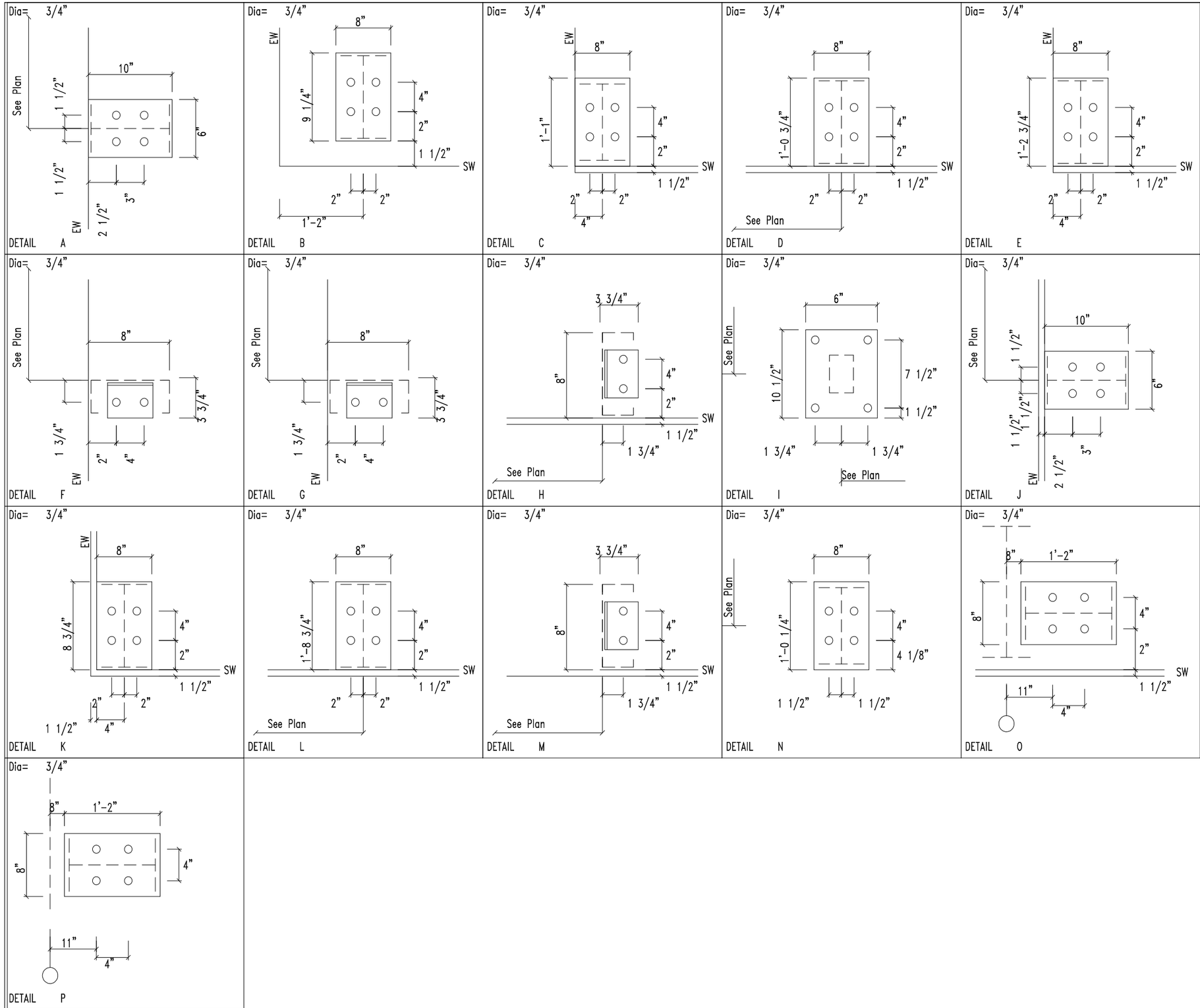

BUILD IT WITH STEEL
BUILD IT TO LAST
JNL
STEEL COMPONENTS, INC.

432-758-9900
430 US HWY 180 W
SEMINOLE,TX 79360

CUSTOMER INFO

PROJECT
PB50554
SHARP OILFIELD SERVICES
ODESSA TEXAS 79763

SHEET NAME/TITLE
ANCHOR BOLT DETAILS

DRAWN BY	DATE
BN	5/23/23
CHECKED BY	DATE
BN	5/23/23
APPROVED BY	DATE
	5/23/23

SHEET NO.	REV.	SCALE
A2 of 5	--	NTS

REVISIONS

NO.	NOTES	BY	DATE
--	--	--	00-00-00

ENDWALL COLUMN: BASIC COLUMN REACTIONS (k)

Frm Line	Col Line	Dead Vert	Collat Vert	Floor Live Vert	Wind Pnss Horz	Wind Sucl Horz	Seis Long Vert
2	D	2.1	1.3	17.9	-4.5	4.9	0.0
2	F	2.1	1.3	17.9	-4.5	4.9	0.0

ENDWALL COLUMN: MAXIMUM REACTIONS

Frm Line	Col Line	Column_Reactions(k) Load Id	Hmax H	V Vmax	Load Id	Hmin H	V Vmin
2	D	14	3.0	1.3	15	-2.7	1.3
		9	0.0	21.3			
2	F	14	3.0	1.3	15	-2.7	1.3
		9	0.0	21.3			

ENDWALL COLUMN: MAXIMUM REACTIONS

Frm Line	Col Line	Column_Reactions(k) Load Id	Hmax H	V Vmax	Load Id	Hmin H	V Vmin

NOTES FOR REACTIONS

1. All loading conditions are examined and only maximum/minimum H or V and the corresponding H or V are reported.
2. Positive reactions are as shown in the sketch. Foundation loads are in opposite directions.
3. Bracing reactions are in the plane of the brace with the H pointing away from the braced bay. The vertical reaction is downward.
4. Building reactions are based on the following building data:

Width (ft)	=	68.0
Length (ft)	=	62.0
Eave Height (ft)	=	21.0/ 21.0
Roof Slope (rise/12)	=	2.0/ 2.0
Dead Load (psf)	=	2.0
Collateral Load (psf)	=	0.5
Roof Live Load(psf)	=	20.0
Frame Live Load		
Min(psf)	=	12.0
Max(psf)	=	12.2
Snow Load (psf)	=	3.5
Wind Speed (mph)	=	106.0
Wind Code	=	IBC 18
Exposure	=	C
Closure	=	Enclosed
Importance Wind	=	1.00
Importance Seismic	=	1.00
Seismic Zone	=	A
Seismic Coeff (Fa*Ss)	=	0.18

5. Loading conditions are:

1 Dead+Collateral+Snow+Snow_Drift
2 Dead+Collateral+0.75Live+0.45Wind_Long2R
3 0.6Dead+0.6Wind_Left1
4 0.6Dead+0.6Wind_Right1
5 0.6Dead+0.6Wind_Left2
6 0.6Dead+0.6Wind_Right2
7 0.6Dead+0.6Wind_Long1L
8 0.6Dead+0.6Wind_Long2L
9 Dead+Collateral+Floor_Live
10 Dead+Collateral+0.75Live+0.75Floor_Live
11 Dead+Collateral+0.75Snow+0.75Snow_Drift+0.75Floor_Live
12 Dead+Collateral+0.75Live+0.45Wind_Left2+0.75Floor_Live
13 Dead+Collateral+0.75Live+0.45Wind_Right2+0.75Floor_Live
14 0.6Dead+0.6Wind_Right2+0.6Wind_Suction
15 0.6Dead+0.6Wind_Pressure+0.6Wind_Long2L

ANCHOR BOLT SUMMARY

	Qty	Locate	Dia (in)	Type	Proj (in)
○	44	Jamb	3/4"	A307	2.50
○	8	Endwall	3/4"	A307	2.50
○	32	Frame	3/4"	A307	2.50
○	24	Floor	3/4"	A307	2.50

BUILDING BRACING REACTIONS

Wall Loc	Col Line	Col Line	Wind Horz	Wind Vert	Seismic Horz	Seismic Vert	Panel_Shear (lb/ft) Wind	Panel_Shear (lb/ft) Seis	Note
L_EW	1								(b)
F_SW	H	2,3	3.4	6.1	0.3	0.6			(b)
R_EW	4								(b)
B_SW	B	2,3	3.4	6.1	0.3	0.6			(b)

(b)Wind bent in bay, base above finish floor
(h)Rigid frame at endwall

FLOOR COLUMN REACTIONS

Frame Line	Col Line	Max_Vert Ld	(k)	Dead Vert (k)	Coll Vert (k)	Live Vert (k)	Anc._Bolt Qty	Dia	Base Plate (in) Width	Length	Thick	Grout (in)
3	@15.3	9	37.6	6.5	2.2	29.0	4	0.750	6.000	10.50	0.750	0.0
3	@35.3	9	33.1	5.7	1.9	25.5	4	0.750	6.000	10.50	0.625	0.0
3	@50.5	9	33.3	5.8	1.9	25.6	4	0.750	6.000	10.50	0.625	0.0
4	@13.0	9	16.6	3.0	1.0	12.7	4	0.750	6.000	10.50	0.500	0.0
4	@34.0	9	20.0	3.6	1.1	15.3	4	0.750	6.000	10.50	0.500	0.0
4	@55.0	9	16.6	3.0	1.0	12.7	4	0.750	6.000	10.50	0.500	0.0

FRAME LINES: 1 2 3 4

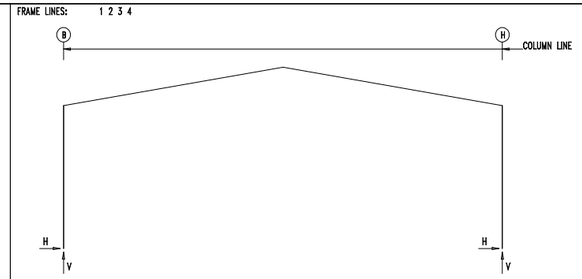

RIGID FRAME: MAXIMUM REACTIONS

Frm Line	Col Line	Column_Reactions(k) Load Id	Hmax H	V Vmax	Load Id	Hmin H	V Vmin
1	B	2	5.3	12.1	5	-3.9	-6.5
					6	-3.1	-8.2
1	H	6	3.9	-6.5	2	-5.3	12.1
		2	-5.3	12.1	5	3.1	-8.2

RIGID FRAME: MAXIMUM REACTIONS

Frm Line	Col Line	Column_Reactions(k) Load Id	Hmax H	V Vmax	Load Id	Hmin H	V Vmin
2	B	4	4.0	-5.0	12	-2.8	14.9
		10	-1.7	21.4	3	-0.9	-8.9
2	H	13	2.8	14.9	3	-4.0	-5.0
		10	1.7	21.4	4	0.9	-8.9

RIGID FRAME: MAXIMUM REACTIONS

Frm Line	Col Line	Column_Reactions(k) Load Id	Hmax H	V Vmax	Load Id	Hmin H	V Vmin
3	B	4	3.2	-3.3	12	-2.8	13.7
		10	-1.6	18.3	7	2.0	-8.2
3	H	13	2.8	16.0	3	-3.2	-3.2
		10	1.6	20.6	8	-2.0	-8.1

RIGID FRAME: MAXIMUM REACTIONS

Frm Line	Col Line	Column_Reactions(k) Load Id	Hmax H	V Vmax	Load Id	Hmin H	V Vmin
4	B	4	1.8	-1.8	1	-2.7	11.6
		11	-2.1	12.2	3	-0.3	-3.8
4	H	1	2.7	11.7	3	-1.8	-1.8
		11	2.1	12.6	4	0.3	-3.7

RIGID FRAME: BASIC COLUMN REACTIONS (k)

Frame Line	Column Line	Dead Horiz	Dead Vert	Collateral Horiz	Collateral Vert	Live Horiz	Live Vert	Snow Horiz	Snow Vert	Wind_Left1 Horiz	Wind_Left1 Vert	Wind_Right1 Horiz	Wind_Right1 Vert
1	B	1.0	2.6	0.2	0.4	3.8	9.0	1.1	2.4	-6.3	-16.1	-7.2	-13.5
1	H	-1.0	2.6	-0.2	0.4	-3.8	9.0	-1.1	2.4	7.2	-13.5	6.3	-16.1

Frame Line	Column Line	Wind_Left2 Horiz	Wind_Left2 Vert	Wind_Right2 Horiz	Wind_Right2 Vert	Wind_Long1 Horiz	Wind_Long1 Vert	Wind_Long2 Horiz	Wind_Long2 Vert	Seismic_Left Horiz	Seismic_Left Vert	Seismic_Right Horiz	Seismic_Right Vert
1	B	-7.5	-13.5	-6.2	-16.3	-6.7	-12.6	2.8	5.3	-0.1	-0.1	0.1	0.1
1	H	6.2	-16.3	7.5	-13.5	6.7	-12.6	-2.8	5.3	-0.1	0.1	0.1	-0.1

Frame Line	Column Line	MIN_SNOW Horiz	MIN_SNOW Vert	F1UNB_SL_L Horiz	F1UNB_SL_L Vert	F1UNB_SL_R Horiz	F1UNB_SL_R Vert
1	B	1.6	3.5	1.3	2.8	1.3	1.7
1	H	-1.6	3.5	-1.3	1.7	-1.3	2.8

Frame Line	Column Line	Dead Horiz	Dead Vert	Collateral Horiz	Collateral Vert	Live Horiz	Live Vert	Floor Horiz	Floor Vert	Snow Horiz	Snow Vert	Wind_Left1 Horiz	Wind_Left1 Vert
2	B	-0.4	4.0	-0.1	1.2	-1.8	11.0	0.1	10.6	-0.5	3.0	-1.2	-18.8
2	H	0.4	4.0	0.1	1.2	1.8	11.0	-0.1	10.6	0.5	3.0	-7.1	-12.4

Frame Line	Column Line	Wind_Right1 Horiz	Wind_Right1 Vert	Wind_Left2 Horiz	Wind_Left2 Vert	Wind_Right2 Horiz	Wind_Right2 Vert	Wind_Long1 Horiz	Wind_Long1 Vert	Wind_Long2 Horiz	Wind_Long2 Vert	Seismic_Left Horiz	Seismic_Left Vert
2	B	7.1	-12.4	-2.4	-14.3	5.8	-12.2	3.1	-18.5	2.7	-17.6	-0.3	-0.1
2	H	1.2	-18.8	-5.8	-12.2	2.4	-14.3	-2.7	-17.6	-3.1	-18.5	-0.3	0.1

Frame Line	Column Line	Seismic_Right Horiz	Seismic_Right Vert	Seismic_Long Horiz	Seismic_Long Vert	MIN_SNOW Horiz	MIN_SNOW Vert	F2UNB_SL_L Horiz	F2UNB_SL_L Vert	F2UNB_SL_R Horiz	F2UNB_SL_R Vert
2	B	0.3	0.1	0.0	-0.6	-0.8	4.2	-0.6	3.4	-0.6	2.0
2	H	0.3	-0.1	0.0	-0.6	0.8	4.2	0.6	2.0	0.6	3.4

Frame Line	Column Line	Dead Horiz	Dead Vert	Collateral Horiz	Collateral Vert	Live Horiz	Live Vert	Floor Horiz	Floor Vert	Snow Horiz	Snow Vert	Snow_Drift Horiz	Snow_Drift Vert
3	B	-0.4	3.3	-0.1	1.1	-1.7	9.1	0.2	9.4	-0.5	2.5	-0.6	2.5
3	H	0.4	3.5	0.1	1.3	1.7	9.1	-0.2	12.0	0.5	2.5	0.6	2.5

Frame Line	Column Line	Wind_Left1 Horiz	Wind_Left1 Vert	Wind_Right1 Horiz	Wind_Right1 Vert	Wind_Left2 Horiz	Wind_Left2 Vert	Wind_Right2 Horiz	Wind_Right2 Vert	Wind_Long1 Horiz	Wind_Long1 Vert	Wind_Long2 Horiz	Wind_Long2 Vert
3	B	-0.9	-14.8	5.8	-8.9	-2.6	-10.2	4.1	-4.4	3.7	-17.0	2.9	-15.1
3	H	-5.8	-8.9	0.9	-14.8	-4.1	-4.4	2.6	-10.2	-2.9	-15.1	-3.7	-17.0

Frame Line	Column Line	Seismic_Left Horiz	Seismic_Left Vert	Seismic_Right Horiz	Seismic_Right Vert	Seismic_Long Horiz	Seismic_Long Vert	MIN_SNOW Horiz	MIN_SNOW Vert	F3UNB_SL_L Horiz	F3UNB_SL_L Vert	F3UNB_SL_R Horiz	F3UNB_SL_R Vert
3	B	-0.4	-0.2	0.4	0.2	0.0	-0.6	-0.7	3.5	-0.6	2.8	-0.6	1.7
3	H	-0.4	0.2	0.4	-0.2	0.0	-0.6	0.7	3.5	0.6	1.7	0.6	2.8

Frame Line	Column Line	Dead Horiz	Dead Vert	Collateral Horiz	Collateral Vert	Live Horiz	Live Vert	Floor Horiz	Floor Vert	Snow Horiz	Snow Vert	Snow_Drift Horiz	Snow_Drift Vert
4	B	-0.3	2.1	0.0	0.5	-0.9	4.4	0.1	3.8	-0.3	1.2	-2.1	7.9
4	H	0.3	2.1	0.0	0.5	0.9	4.4	-0.1	4.3	0.3	1.2	2.1	7.9

Frame Line	Column Line	Wind_Left1 Horiz	Wind_Left1 Vert	Wind_Right1 Horiz	Wind_Right1 Vert	Wind_Left2 Horiz	Wind_Left2 Vert	Wind_Right2 Horiz	Wind_Right2 Vert	Wind_Long1 Horiz	Wind_Long1 Vert	Wind_Long2 Horiz	Wind_Long2 Vert
4	B	-0.2	-8.3	3.3	-5.0	-1.1	-6.2	2.5	-2.9	2.2	-6.1	1.7	-4.9
4	H	-3.3	-5.0	0.2	-8.3	-2.5	-2.9	1.1	-6.2	-1.7	-4.9	-2.2	-6.1

Frame Line	Column Line	Seismic_Left Horiz	Seismic_Left Vert	Seismic_Right Horiz	Seismic_Right Vert	MIN_SNOW Horiz	MIN_SNOW Vert	F4UNB_SL_L Horiz	F4UNB_SL_L Vert	F4UNB_SL_R Horiz	F4UNB_SL_R Vert
4	B	-0.3	-0.1	0.3	0.1	-0.4	1.7	-0.3	1.4	-0.3	0.8
4	H	-0.3	0.1	0.3	-0.1	0.4	1.7	0.3	0.8	0.3	1.4

BUILD IT WITH STEEL BUILD IT TO LAST
JNL STEEL COMPONENTS, INC.
432-758-9900
430 US HWY 180 W
SEMINOLE,TX 79360

CUSTOMER INFO

PROJECT
PB50554
SHARP OILFIELD SERVICES
ODESSA TEXAS 79763

SHEET NAME/TITLE
ANCHOR BOLT REACTIONS

DRAWN BY	DATE
BN	5/23/23
CHECKED BY	DATE
BN	5/23/23
APPROVED BY	DATE
.	5/23/23

SHEET NO.	REV.	SCALE
A3 of 5	--	NTS

REVISIONS

NO.	NOTES	BY	DATE
--	--	--	00-00-00

ENDWALL COLUMN: BASIC COLUMN REACTIONS (k)

Frm Line	Col Line	Dead Vert	Wind Press Horz	Wind Suct Horz	Seis Long Vert
4	C	0.4	-4.5	5.0	0.0
4	E	0.5	-5.4	6.0	0.0
4	G	0.4	-4.5	5.0	0.0
11	G	0.4	-4.5	5.0	0.0
11	E	0.5	-5.4	6.0	0.0
11	C	0.4	-4.5	5.0	0.0

ENDWALL COLUMN: MAXIMUM REACTIONS

Frm Line	Col Line	Load Id	Hmax H	V Vmax	Load Id	Hmin H	V Vmin
4	C	38	3.0	0.2	39	-2.7	0.2
		40	2.2	0.4			
4	E	38	3.6	0.3	39	-3.2	0.3
		40	2.7	0.5			
4	G	38	3.0	0.2	39	-2.7	0.2
		40	2.2	0.4			
11	G	38	3.0	0.2	39	-2.7	0.2
		41	2.2	0.4			
11	E	38	3.6	0.3	39	-3.2	0.3
		41	2.7	0.5			
11	C	38	3.0	0.2	39	-2.7	0.2
		41	2.2	0.4			

(Column_Reactions(k))

NOTES FOR REACTIONS

1. All loading conditions are examined and only maximum/minimum H or V and the corresponding H or V are reported.
2. Positive reactions are as shown in the sketch. Foundation loads are in opposite directions.
3. Bracing reactions are in the plane of the brace with the H pointing away from the braced bay. The vertical reaction is downward.
4. Building reactions are based on the following building data:

Width (ft)	=	80.0
Length (ft)	=	175.0
Eave Height (ft)	=	24.0/ 24.0
Roof Slope (rise/12)	=	2.0/ 2.0
Dead Load (psf)	=	2.0
Collateral Load (psf)	=	0.5
Roof Live Load(psf)	=	20.0
Frame Live Load(psf)	=	12.0
Snow Load (psf)	=	3.5
Wind Speed (mph)	=	106.0
Wind Code	=	IBC 18
Exposure	=	C
Closure	=	Enclosed
Importance Wind	=	1.00
Importance Seismic	=	1.00
Seismic Zone	=	A
Seismic Coeff (Fa*Ss)	=	0.18

5. Loading conditions are:

1 Dead+Collateral+Live
2 0.6Dead+0.6Wind_Left1
3 0.6Dead+0.6Wind_Right1
4 0.6Dead+0.6Wind_Left2
5 0.6Dead+0.6Wind_Right2
6 0.6Dead+0.6Wind_Long1L
7 0.6Dead+0.6Wind_Long2L
8 Dead+Collateral+F2CRANEA2
9 Dead+Collateral+F2CRANEA3
10 Dead+Collateral+F2CRANEA6
11 Dead+0.75Snow+0.3Wind_Left1+0.75Slide_Snow+0.75F2CRANEA1
12 Dead+0.75Snow+0.3Wind_Right1+0.75Slide_Snow+0.75F2CRANEA4
13 Dead+Collateral+F3CRANEA2
14 Dead+Collateral+F3CRANEA3
15 Dead+Collateral+F3CRANEA6
16 Dead+0.75Snow+0.3Wind_Left1+0.75Slide_Snow+0.75F3CRANEA1
17 Dead+0.75Snow+0.3Wind_Right1+0.75Slide_Snow+0.75F3CRANEA4
18 Dead+Collateral+F4CRANEA2
19 Dead+Collateral+F4CRANEA3
20 Dead+Collateral+F4CRANEA6
21 Dead+0.75Snow+0.3Wind_Left1+0.75Slide_Snow+0.75F4CRANEA1
22 Dead+0.75Snow+0.3Wind_Right1+0.75Slide_Snow+0.75F4CRANEA4
23 Dead+Collateral+F5CRANEA2
24 Dead+Collateral+F5CRANEA3
25 Dead+Collateral+F5CRANEA6
26 Dead+0.75Snow+0.3Wind_Left1+0.75Slide_Snow+0.75F5CRANEA1
27 Dead+0.75Snow+0.3Wind_Right1+0.75Slide_Snow+0.75F5CRANEA4
28 Dead+Collateral+F6CRANEA2
29 Dead+Collateral+F6CRANEA3
30 Dead+Collateral+F6CRANEA6
31 Dead+0.75Snow+0.3Wind_Left1+0.75Slide_Snow+0.75F6CRANEA1
32 Dead+0.75Snow+0.3Wind_Right1+0.75Slide_Snow+0.75F6CRANEA4
33 Dead+Collateral+F7CRANEA2
34 Dead+Collateral+F7CRANEA3
35 Dead+Collateral+F7CRANEA6
36 Dead+0.75Snow+0.3Wind_Left1+0.75Slide_Snow+0.75F7CRANEA1
37 Dead+0.75Snow+0.3Wind_Right1+0.75Slide_Snow+0.75F7CRANEA4
38 0.6Dead+0.6Wind_Right2+0.6Wind_Suction
39 0.6Dead+0.6Wind_Pressure+0.6Wind_Long2L
40 Dead+Collateral+0.45Wind_Right2+0.45Wind_Suction+0.75E1UNB_SL_R
41 Dead+Collateral+0.45Wind_Right2+0.45Wind_Suction+0.75E2UNB_SL_R

RIGID FRAME: BASIC COLUMN REACTIONS (k)

Frame Line	Column Line	Dead Horiz	Dead Vert	Collateral Horiz	Collateral Vert	Live Horiz	Live Vert	Snow Horiz	Snow Vert	Wind_Left1 Horiz	Wind_Left1 Vert	Wind_Right1 Horiz	Wind_Right1 Vert
4	A	0.9	2.1	0.1	0.3	3.0	6.1	0.9	1.8	-7.6	-12.1	-1.5	-8.0
4	I	-0.9	2.1	-0.1	0.3	-3.0	6.1	-0.9	1.8	1.5	-8.0	7.6	-12.1

Frame Line	Column Line	Wind_Left2 Horiz	Wind_Left2 Vert	Wind_Right2 Horiz	Wind_Right2 Vert	Wind_Long1 Horiz	Wind_Long1 Vert	Wind_Long2 Horiz	Wind_Long2 Vert	Seismic_Left Horiz	Seismic_Left Vert	Seismic_Right Horiz	Seismic_Right Vert
4	A	-6.9	-8.3	-0.8	-4.3	-2.2	-10.9	-3.1	-8.8	-0.2	-0.1	0.2	0.1
4	I	0.8	-4.3	6.9	-8.3	3.1	-8.8	2.2	-10.9	-0.2	0.1	0.2	-0.1

Frame Line	Column Line	MIN_SNOW Horiz	MIN_SNOW Vert	F1UNB_SL_L Horiz	F1UNB_SL_L Vert	F1UNB_SL_R Horiz	F1UNB_SL_R Vert
4	A	1.3	2.5	0.9	2.0	0.9	1.3
4	I	-1.3	2.5	-0.9	1.3	-0.9	2.0

Frame Line	Column Line	Dead Horiz	Dead Vert	Collateral Horiz	Collateral Vert	Live Horiz	Live Vert	Snow Horiz	Snow Vert	Wind_Left1 Horiz	Wind_Left1 Vert	Wind_Right1 Horiz	Wind_Right1 Vert
5	A	0.3	1.9	0.1	0.2	1.2	5.8	0.4	1.7	-6.1	-11.6	4.0	-5.2
5	I	-0.3	1.9	-0.1	0.2	-1.2	5.8	-0.4	1.7	-4.0	-5.2	6.1	-11.6
5	E	0.0	3.6	0.0	0.5	0.0	12.2	0.0	3.6	-0.7	-15.6	0.7	-15.6

Frame Line	Column Line	Wind_Left2 Horiz	Wind_Left2 Vert	Wind_Right2 Horiz	Wind_Right2 Vert	Wind_Long1 Horiz	Wind_Long1 Vert	Wind_Long2 Horiz	Wind_Long2 Vert	Seismic_Left Horiz	Seismic_Left Vert	Seismic_Right Horiz	Seismic_Right Vert
5	A	-7.3	-7.1	2.7	-0.7	1.8	-12.9	1.3	-9.9	-0.4	-0.3	0.4	0.3
5	I	-2.7	-0.7	7.3	-7.1	-1.3	-9.9	-1.8	-12.9	-0.4	0.3	0.4	-0.3
5	E	-0.7	-9.7	0.7	-9.7	0.7	-18.5	-0.7	-18.5	-0.2	0.0	0.2	0.0

Frame Line	Column Line	Seismic_Long Horiz	Seismic_Long Vert	MIN_SNOW Horiz	MIN_SNOW Vert	F2CRANEA1 Horiz	F2CRANEA1 Vert	F2CRANEA2 Horiz	F2CRANEA2 Vert	F2CRANEA3 Horiz	F2CRANEA3 Vert	F2CRANEA4 Horiz	F2CRANEA4 Vert
5	A	0.0	-0.5	0.5	2.4	-0.6	22.8	2.1	24.5	-0.1	3.6	2.6	5.3
5	I	0.0	-0.5	-0.5	2.4	-2.6	5.3	0.1	3.6	-2.1	24.5	0.6	22.8
5	E	0.0	-0.9	0.0	5.1	-0.6	27.7	1.6	27.7	-1.6	27.7	0.6	27.7

Frame Line	Column Line	F2CRANEA5 Horiz	F2CRANEA5 Vert	F2CRANEA6 Horiz	F2CRANEA6 Vert	F2PAT_LL_1 Horiz	F2PAT_LL_1 Vert	F2PAT_LL_2 Horiz	F2PAT_LL_2 Vert	F2UNB_SL_L Horiz	F2UNB_SL_L Vert	F2UNB_SL_R Horiz	F2UNB_SL_R Vert
5	A	-1.0	2.7	1.6	4.4	1.0	5.9	0.2	-0.1	0.4	1.9	0.1	0.4
5	I	-1.6	4.4	1.0	2.7	-0.2	-0.1	-1.0	5.9	-0.1	0.4	-0.4	1.9
5	E	-1.1	48.7	1.1	48.7	-0.7	6.1	0.7	6.1	-0.2	4.1	0.2	4.1

Frame Line	Column Line	Dead Horiz	Dead Vert	Collateral Horiz	Collateral Vert	Live Horiz	Live Vert	Snow Horiz	Snow Vert	Wind_Left1 Horiz	Wind_Left1 Vert	Wind_Right1 Horiz	Wind_Right1 Vert
6	A	0.3	1.9	0.1	0.2	1.2	5.9	0.4	1.7	-5.8	-10.8	4.3	-4.8
6	I	-0.3	1.9	-0.1	0.2	-1.2	5.9	-0.4	1.7	-4.3	-4.8	5.8	-10.8
6	E	0.0	3.6	0.0	0.5	0.0	12.3	0.0	3.6	-0.8	-14.2	0.8	-14.2

Frame Line	Column Line	Wind_Left2 Horiz	Wind_Left2 Vert	Wind_Right2 Horiz	Wind_Right2 Vert	Wind_Long1 Horiz	Wind_Long1 Vert	Wind_Long2 Horiz	Wind_Long2 Vert	Seismic_Left Horiz	Seismic_Left Vert	Seismic_Right Horiz	Seismic_Right Vert
6	A	-7.3	-6.2	2.8	-0.2	1.9	-12.0	1.4	-9.4	-0.5	-0.4	0.5	0.4
6	I	-2.8	-0.2	7.3	-6.2	-1.4	-9.4	-1.9	-12.0	-0.5	0.4	0.5	-0.4
6	E	-0.8	-8.5	0.8	-8.5	0.6	-17.3	-0.6	-17.3	-0.3	0.0	0.3	0.0

Frame Line	Column Line	Seismic_Long Horiz	Seismic_Long Vert	MIN_SNOW Horiz	MIN_SNOW Vert	F3CRANEA1 Horiz	F3CRANEA1 Vert	F3CRANEA2 Horiz	F3CRANEA2 Vert	F3CRANEA3 Horiz	F3CRANEA3 Vert	F3CRANEA4 Horiz	F3CRANEA4 Vert
6	A	0.0	-0.5	0.5	2.4	-0.5	23.8	2.2	25.5	0.0	4.5	2.7	6.2
6	I	0.0	-0.5	-0.5	2.4	-2.7	6.2	0.0	4.5	-2.2	25.5	0.5	23.8
6	E	0.0	-0.9	0.0	5.1	-0.6	29.6	1.6	29.6	-1.6	29.6	0.6	29.6

Frame Line	Column Line	F3CRANEA5 Horiz	F3CRANEA5 Vert	F3CRANEA6 Horiz	F3CRANEA6 Vert	F3PAT_LL_1 Horiz	F3PAT_LL_1 Vert	F3PAT_LL_2 Horiz	F3PAT_LL_2 Vert	F3UNB_SL_L Horiz	F3UNB_SL_L Vert	F3UNB_SL_R Horiz	F3UNB_SL_R Vert
6	A	-1.0	3.6	1.7	5.3	1.0	6.0	0.2	-0.1	0.4	1.9	0.1	0.4
6	I	-1.7	5.3	1.0	3.6	-0.2	-0.1	-1.0	6.0	-0.1	0.4	-0.4	1.9
6	E	-1.1	50.6	1.1	50.6	-0.7	6.2	0.7	6.2	-0.2	4.1	0.2	4.1

Frame Line	Column Line	Dead Horiz	Dead Vert	Collateral Horiz	Collateral Vert	Live Horiz	Live Vert	Snow Horiz	Snow Vert	Wind_Left1 Horiz	Wind_Left1 Vert	Wind_Right1 Horiz	Wind_Right1 Vert
7	A	0.3	1.9	0.1	0.2	1.2	5.9	0.4	1.7	-5.8	-10.8	4.3	-4.8
7	I	-0.3	1.9	-0.1	0.2	-1.2	5.9	-0.4	1.7	-4.3	-4.8	5.8	-10.8
7	E	0.0	3.6	0.0	0.5	0.0	12.3	0.0	3.6	-0.8	-14.2	0.8	-14.2

Frame Line	Column Line	Wind_Left2 Horiz	Wind_Left2 Vert	Wind_Right2 Horiz	Wind_Right2 Vert	Wind_Long1 Horiz	Wind_Long1 Vert	Wind_Long2 Horiz	Wind_Long2 Vert	Seismic_Left Horiz	Seismic_Left Vert	Seismic_Right Horiz	Seismic_Right Vert
7	A	-7.3	-6.2	2.8	-0.2	1.9	-9.8	1.4	-7.2	-0.5	-0.4	0.5	0.4
7	I	-2.8	-0.2	7.3	-6.2	-1.4	-7.2	-1.9	-9.8	-0.5	0.4	0.5	-0.4
7	E	-0.8	-8.5	0.8	-8.5	0.6	-12.3	-0.6	-12.3	-0.3	0.0	0.3	0.0

Frame Line	Column Line	MIN_SNOW Horiz	MIN_SNOW Vert	F4CRANEA1 Horiz	F4CRANEA1 Vert	F4CRANEA2 Horiz	F4CRANEA2 Vert	F4CRANEA3 Horiz	F4CRANEA3 Vert	F4CRANEA4 Horiz	F4CRANEA4 Vert	F4CRANEA5 Horiz	F4CRANEA5 Vert
7	A	0.5	2.4	-0.5	23.8	2.2	25.5	0.0	4.5	2.7	6.2	-1.0	3.6
7	I	-0.5	2.4	-2.7	6.2	0.0	4.5	-2.2	25.5	0.5	23.8	-1.7	5.3
7	E	0.0	5.1	-0.6	29.6	1.6	29.6	-1.6	29.6	0.6	29.6	-1.1	50.6

Frame Line	Column Line	F4CRANEA6 Horiz	F4CRANEA6 Vert	F4PAT_LL_1 Horiz	F4PAT_LL_1 Vert	F4PAT_LL_2 Horiz	F4PAT_LL_2 Vert	F4UNB_SL_L Horiz	F4UNB_SL_L Vert	F4UNB_SL_R Horiz	F4UNB_SL_R Vert
7	A	1.7	5.3	1.0	6.0	0.2	-0.1	0.4	1.9	0.1	0.4
7	I	1.0	3.6	-0.2	-0.1	-1.0	6.0	-0.1	0.4	-0.4	1.9
7	E	1.1	50.6	-0.7	6.2	0.7	6.2	-0.2	4.1	0.2	4.1

Frame Line	Column Line	Dead Horiz	Dead Vert	Collateral Horiz	Collateral Vert	Live Horiz	Live Vert	Snow Horiz	Snow Vert	Wind_Left1 Horiz	Wind_Left1 Vert	Wind_Right1 Horiz	Wind_Right1 Vert
8	A	0.3	1.9	0.1	0.2	1.2	5.8	0.4	1.7	-5.8	-10.8	4.3	-4.8
8	I	-0.3	1.9	-0.1	0.2	-1.2	5.8	-0.4	1.7	-4.3	-4.8	5.8	-10.8
8	E	0.0	3.6	0.0	0.5	0.0	12.3	0.0	3.6	-0.8	-14.3	0.8	-14.3

Frame Line	Column Line	Wind_Left2 Horiz	Wind_Left2 Vert	Wind_Right2 Horiz	Wind_Right2 Vert	Wind_Long1 Horiz	Wind_Long1 Vert	Wind_Long2 Horiz	Wind_Long2 Vert	Seismic_Left Horiz	Seismic_Left Vert	Seismic_Right Horiz	Seismic_Right Vert
8	A	-7.3	-6.3	2.8	-0.2	1.9	-9.8	1.4	-7.2	-0.5	-0.4	0.5	0.4
8	I	-2.8	-0.2	7.3	-6.3	-1.4	-7.2	-1.9	-9.8	-0.5	0.4	0.5	-0.4
8	E	-0.8	-8.5	0.8	-8.5	0.7	-12.3	-0.7	-12.3	-0.3	0.0	0.3	0.0

Frame Line	Column Line	MIN_SNOW Horiz	MIN_SNOW Vert	F5CRANEA1 Horiz	F5CRANEA1 Vert	F5CRANEA2 Horiz	F5CRANEA2 Vert	F5CRANEA3 Horiz	F5CRANEA3 Vert	F5CRANEA4 Horiz	F5CRANEA4 Vert	F5CRANEA5 Horiz	F5CRANEA5 Vert
8	A	0.5	2.4	-0.5	23.8	2.2	25.5	0.0	4.5	2.6	6.2	-1.0	3.6
8	I	-0.5	2.4	-2.6	6.2	0.0	4.5	-2.2	25.5	0.5	23.8	-1.7	5.3
8	E	0.0	5.1	-0.7	29.5	1.6	29.5	-1.6	29.5	0.7	29.5	-1.1	50.6

Frame Line	Column Line	F5CRANEA6 Horiz	F5CRANEA6 Vert	F5PAT_LL_1 Horiz	F5PAT_LL_1 Vert	F5PAT_LL_2 Horiz	F5PAT_LL_2 Vert	F5UNB_SL_L Horiz	F5UNB_SL_L Vert	F5UNB_SL_R Horiz	F5UNB_SL_R Vert
8	A	1.7	5.3	1.0	6.0	0.2	-0.1	0.4	1.9	0.1	0.4
8	I	1.0	3.6	-0.2	-0.1	-1.0	6.0	-0.1	0.4	-0.4	1.9
8	E	1.1	50.6	-0.7	6.2	0.7	6.2	-0.2	4.1	0.2	4.1

Frame Line	Column Line	Dead Horiz	Dead Vert	Collateral Horiz	Collateral Vert	Live Horiz	Live Vert	Snow Horiz	Snow Vert	Wind_Left1 Horiz	Wind_Left1 Vert	Wind_Right1 Horiz	Wind_Right1 Vert
9	A	0.3	1.9	0.1	0.2	1.2	5.8	0.4	1.7	-6.1	-11.6	4.0	-5.2
9	I	-0.3	1.9	-0.1	0.2	-1.2	5.8	-0.4	1.7	-4.0	-5.2	6.1	-11.6
9	E	0.0	3.6	0.0	0.5	0.0	12.3	0.0	3.6	-0.7	-15.7	0.7	-15.7

Frame Line	Column Line	Wind_Left2 Horiz	Wind_Left2 Vert	Wind_Right2 Horiz	Wind_Right2 Vert	Wind_Long1 Horiz	Wind_Long1 Vert	Wind_Long2 Horiz	Wind_Long2 Vert	Seismic_Left Horiz	Seismic_Left Vert	Seismic_Right Horiz	Seismic_Right Vert
9	A	-7.4	-7.2	2.7	-0.7	1.8	-12.9	1.3	-9.9	-0.4	-0.3	0.4	0.3
9	I	-2.7	-0.7	7.4	-7.2	-1.3	-9.9	-1.8	-12.9	-0.4	0.3	0.4	-0.3
9	E	-0.7	-9.8	0.7	-9.8	0.8	-18.6	-0.8	-18.6	-0.2	0.0	0.2	0.0

Frame Line	Column Line	Seismic_Long Horiz	Seismic_Long Vert	MIN_SNOW Horiz	MIN_SNOW Vert	F6CRANEA1 Horiz	F6CRANEA1 Vert	F6CRANEA2 Horiz	F6CRANEA2 Vert	F6CRANEA3 Horiz	F6CRANEA3 Vert	F6CRANEA4 Horiz	F6CRANEA4 Vert
9	A	0.0	-0.5	0.5	2.4	-0.5	22.8	2.1	24.5	-0.1	3.6	2.6	5.3
9	I	0.0	-0.5	-0.5	2.4	-2.6	5.3	0.1	3.6	-2.1	24.5	0.5	22.8
9	E	0.0	-0.9	0.0	5.1	-0.7	27.7	1.6	27.7	-1.6	27.7	0.7	27.7

Frame Line	Column Line	F6CRANEA5 Horiz	F6CRANEA5 Vert	F6CRANEA6 Horiz	F6CRANEA6 Vert	F6PAT_LL_1 Horiz	F6PAT_LL_1 Vert	F6PAT_LL_2 Horiz	F6PAT_LL_2 Vert	F6UNB_SL_L Horiz	F6UNB_SL_L Vert	F6UNB_SL_R Horiz	F6UNB_SL_R Vert
9	A	-1.0	2.7	1.6	4.4	1.0	5.9	0.2	-0.1	0.4	1.9	0.1	0.4
9	I	-1.6	4.4	1.0	2.7	-0.2	-0.1	-1.0	5.9	-0.1	0.4	-0.4	1.9
9	E	-1.1	48.7	1.1	48.7	-0.7	6.1	0.7	6.1	-0.2	4.1	0.2	4.1

Frame Line	Column Line	Dead Horiz	Dead Vert	Collateral Horiz	Collateral Vert	Live Horiz	Live Vert	Snow Horiz	Snow Vert	Wind_Left1 Horiz	Wind_Left1 Vert	Wind_Right1 Horiz	Wind_Right1 Vert
10	A	0.3	1.9	0.1	0.3	1.3	5.9	0.4	1.7	-6.2	-11.8	3.9	-5.3
10	I	-0.3	1.9	-0.1	0.3	-1.3	5.9	-0.4	1.7	-3.9	-5.3	6.2	-11.8
10	E	0.0	3.5	0.0	0.5	0.0	12.0	0.0	3.5	-0.7	-15.2	0.7	-15.2

Frame Line	Column Line	Wind_Left2 Horiz	Wind_Left2 Vert	Wind_Right2 Horiz	Wind_Right2 Vert	Wind_Long1 Horiz	Wind_Long1 Vert	Wind_Long2 Horiz	Wind_Long2 Vert	Seismic_Left Horiz	Seismic_Left Vert	Seismic_Right Horiz	Seismic_Right Vert
10	A	-7.5	-7.2	2.7	-0.8	1.7	-13.0	1.2	-10.0	-0.4	-0.3	0.4	0.3
10	I	-2.7	-0.8	7.5	-7.2	-1.2	-10.0	-1.7	-13.0	-0.4	0.3	0.4	-0.3
10	E	-0.7	-9.5	0.7	-9.5	0.8	-18.2	-0.8	-18.2	-0.2	0.0	0.2	0.0

Frame Line	Column Line	Seismic_Long Horiz	Seismic_Long Vert	MIN_SNOW Horiz	MIN_SNOW Vert	F7CRANEA1 Horiz	F7CRANEA1 Vert	F7CRANEA2 Horiz	F7CRANEA2 Vert	F7CRANEA3 Horiz	F7CRANEA3 Vert	F7CRANEA4 Horiz	F7CRANEA4 Vert
10	A	0.0	-0.5	0.5	2.5	-0.5	22.8	2.1	24.5	-0.1	3.6	2.6	5.3
10	I	0.0	-0.5	-0.5	2.5	-2.6	5.3	0.1	3.6	-2.1	24.5	0.5	22.8
10	E	0.0	-0.9	0.0	5.0	-0.7	27.7	1.6	27.7	-1.6	27.7	0.7	27.7

Frame Line	Column Line	F7CRANEA5 Horiz	F7CRANEA5 Vert	F7CRANEA6 Horiz	F7CRANEA6 Vert	F7PAT_LL_1 Horiz	F7PAT_LL_1 Vert	F7PAT_LL_2 Horiz	F7PAT_LL_2 Vert	F7UNB_SL_L Horiz	F7UNB_SL_L Vert	F7UNB_SL_R Horiz	F7UNB_SL_R Vert
10	A	-1.0	2.7	1.6	4.4	1.1	6.0	0.3	0.0	0.4	1.9	0.1	0.4
10	I	-1.6	4.4	1.0	2.7	-0.3	0.0	-1.1	6.0	-0.1	0.4	-0.4	1.9
10	E	-1.1	48.7	1.1	48.7	-0.8	6.0	0.8	6.0	-0.2	4.1	0.2	4.1

Frame Line	Column Line	Dead Horiz	Dead Vert	Collateral Horiz	Collateral Vert	Live Horiz	Live Vert	Snow Horiz	Snow Vert	Wind_Left1 Horiz	Wind_Left1 Vert	Wind_Right1 Horiz	Wind_Right1 Vert
11	A	0.9	2.1	0.1	0.3	3.0	6.1	0.9	1.8	-7.6	-12.1	-1.5	-8.0
11	I	-0.9	2.1	-0.1	0.3	-3.0	6.1	-0.9	1.8	1.5	-8.0	7.6	-12.1

Frame Line	Column Line	Wind_Left2 Horiz	Wind_Left2 Vert	Wind_Right2 Horiz	Wind_Right2 Vert	Wind_Long1 Horiz	Wind_Long1 Vert	Wind_Long2 Horiz	Wind_Long2 Vert	Seismic_Left Horiz	Seismic_Left Vert	Seismic_Right Horiz	Seismic_Right Vert
11	A	-6.9	-8.3	-0.8	-4.3	-2.2	-10.9	-3.1	-8.8	-0.2	-0.1	0.2	0.1
11	I	0.8	-4.3	6.9	-8.3	3.1	-8.8	2.2	-10.9	-0.2	0.1	0.2	-0.1

Frame Line	Column Line	MIN_SNOW Horiz	MIN_SNOW Vert	F8UNB_SL_L Horiz	F8UNB_SL_L Vert	F8UNB_SL_R Horiz	F8UNB_SL_R Vert
11	A	1.3	2.5	0.9	2.0	0.9	1.3
11	I	-1.3	2.5	-0.9	1.3	-0.9	2.0

FRAME LINES: 4 11

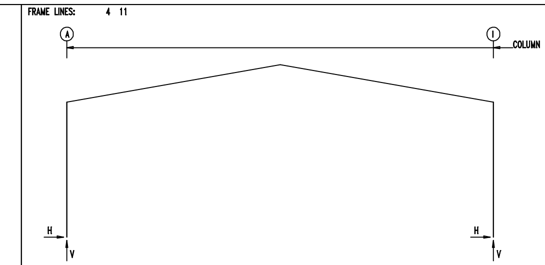

FRAME LINES: 5 6 7 8 9 10

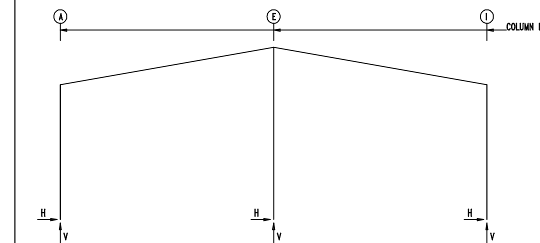

RIGID FRAME: MAXIMUM REACTIONS

Column_Reactions(k)

Frm Line	Col Line	Load Id	Hmax H	V Vmax	Load Id	Hmin H	V Vmin
4	A	1	4.0	8.5	2	-4.0	-6.0
4	I	3	4.0	-6.0	1	-4.0	8.5
		1	-4.0	8.5	3	4.0	-6.0

RIGID FRAME: MAXIMUM REACTIONS

Frm Line	Col Line	Load Id	Hmax H	V Vmax	Load Id	Hmin H	V Vmin
5	A	12	3.7	5.5	4	-4.2	-3.1
		8	2.4	26.6	6	1.3	-6.6
5	I	5	4.2	-3.1	11	-3.7	5.5
		9	-2.4	26.6	7	-1.3	-6.6
5	E	8	1.6	31.8	9	-1.6	31.8
		10	1.1	52.8	7	-0.4	-8.9

RIGID FRAME: MAXIMUM REACTIONS

Frm Line	Col Line	Load Id	Hmax H	V Vmax	Load Id	Hmin H	V Vmin
6	A	17	3.8	6.4	4	-4.2	-2.6
		13	2.5	27.6	6	1.3	-6.1
6	I	5	4.2	-2.6	16	-3.8	6.4
		14	-2.5	27.6	7	-1.3	-6.1
6	E	13	1.6	33.7	14	-1.6	33.7
		15	1.1	54.7	7	-0.4	-8.2

RIGID FRAME: MAXIMUM REACTIONS

Frm Line	Col Line	Load Id	Hmax H	V Vmax	Load Id	Hmin H	V Vmin
7	A	22	3.8	6.4	4	-4.2	-2.6
		18	2.5	27.6	2	-3.3	-5.4
7	I	5	4.2	-2.6	21	-3.8	6.4
		19	-2.5	27.6	3	3.3	-5.4
7	E	18	1.6	33.7	19	-1.6	33.7
		20	1.1	54.7	2	-0.5	-6.4

RIGID FRAME: MAXIMUM REACTIONS

Frm Line	Col Line	Load Id	Hmax H	V Vmax	Load Id	Hmin H	V Vmin
8	A	27	3.8	6.4	4	-4.2	-2.6
		23	2.5	27.6	2	-3.3	-5.3
8	I	5	4.2	-2.6	26	-3.8	6.4
		24	-2.5	27.6	3	3.3	-5.3
8	E	23	1.6	33.7	24	-1.6	33.7
		25	1.1	54.7	2	-0.5	-6.4

RIGID FRAME: MAXIMUM REACTIONS

Frm Line	Col Line	Load Id	Hmax H	V Vmax	Load Id	Hmin H	V Vmin
9	A	32	3.7	5.5	4	-4.3	-3.2
		28	2.4	26.6	6	1.3	-6.6
9	I	5	4.3	-3.2	31	-3.7	5.5
		29	-2.4	26.6	7	-1.3	-6.6
9	E	28	1.6	31.8	29	-1.6	31.8
		30	1.1	52.9	7	-0.5	-9.0

RIGID FRAME: MAXIMUM REACTIONS

Frm Line	Col Line	Load Id	Hmax H	V Vmax	Load Id	Hmin H	V Vmin
10	A	37	3.7	5.5	4	-4.3	-3.2
		33	2.4	26.7	6	1.2	-6.7
10	I	5	4.3	-3.2	36	-3.7	5.5
		34	-2.4	26.7	7	-1.2	-6.7
10	E	33	1.6	31.7	34	-1.6	31.7
		35	1.1	52.7	7	-0.5	-8.8

RIGID FRAME: MAXIMUM REACTIONS

Frm Line	Col Line	Load Id	Hmax H	V Vmax	Load Id	Hmin H	V Vmin
11	A	1	4.0	8.5	2	-4.0	-6.0
11	I	3	4.0	-6.0	1	-4.0	8.5
		1	-4.0	8.5	3	4.0	-6.0

ANCHOR BOLT SUMMARY

Qty	Locate	Dia (in)	Type	Proj (in)
○ 48	Jamb	3/4"	A307	2.50
○ 24	Endwall	3/4"	A307	2.50
○ 88	Frame	3/4"	A307	2.50
○ 48	WindCol	3/4"	A307	2.50

BUILDING BRACING REACTIONS

Wall Loc	Wall Line	Col Line	± Reactions(k) Wind Horz	Wind Vert	Seismic Horz	Seismic Vert	Panel_Shear (lb/ft) Wind	Seis	Note
L_EW	4								(h)
F_SW	I	5,6	1.1	2.2	0.2	0.5			(b)
		9,10	1.1	2.2	0.2	0.5			(b)
R_EW	11								(h)
B_SW	A	9,10	1.1	2.2	0.2	0.5			(b)
		5,6	1.1	2.2	0.2	0.5			(b)
INT	E	5,6	0.0	5.0	0.0	0.9			(d)
	E	9,10	0.0	5.0	0.0	0.9			(d)

(b)Wind bent in bay, base above finish floor
(d)X-Bracing above wind bent, base above finish floor
(h)Rigid frame at endwall

BUILD IT WITH STEEL BUILD IT TO LAST
JNL STEEL COMPONENTS, INC.
432-758-9900
430 US HWY 180 W
SEMINOLE,TX 79360

CUSTOMER INFO

PROJECT
PB50554

SHARP OILFIELD SERVICES

ODESSA TEXAS 79763

SHEET NAME/TITLE
ANCHOR BOLT REACTIONS

DRAWN BY	DATE
BN	5/23/23
CHECKED BY	DATE
BN	5/23/23
APPROVED BY	DATE
	5/23/23

SHEET NO.	REV.	SCALE
A4 of 5	--	NTS

REVISIONS

NO.	NOTES	BY	DATE
--	--	--	00-00-00

ANCHOR BOLT SUMMARY

Qty	Locate	Dia (in)	Type	Proj (in)
16	PC	3/4"	A307	2.50

MAXIMUM REACTION

Part Id	Orient	--Max(k)-- Dead Vert	Wind Horz
1	Trans.	0.4	3.0

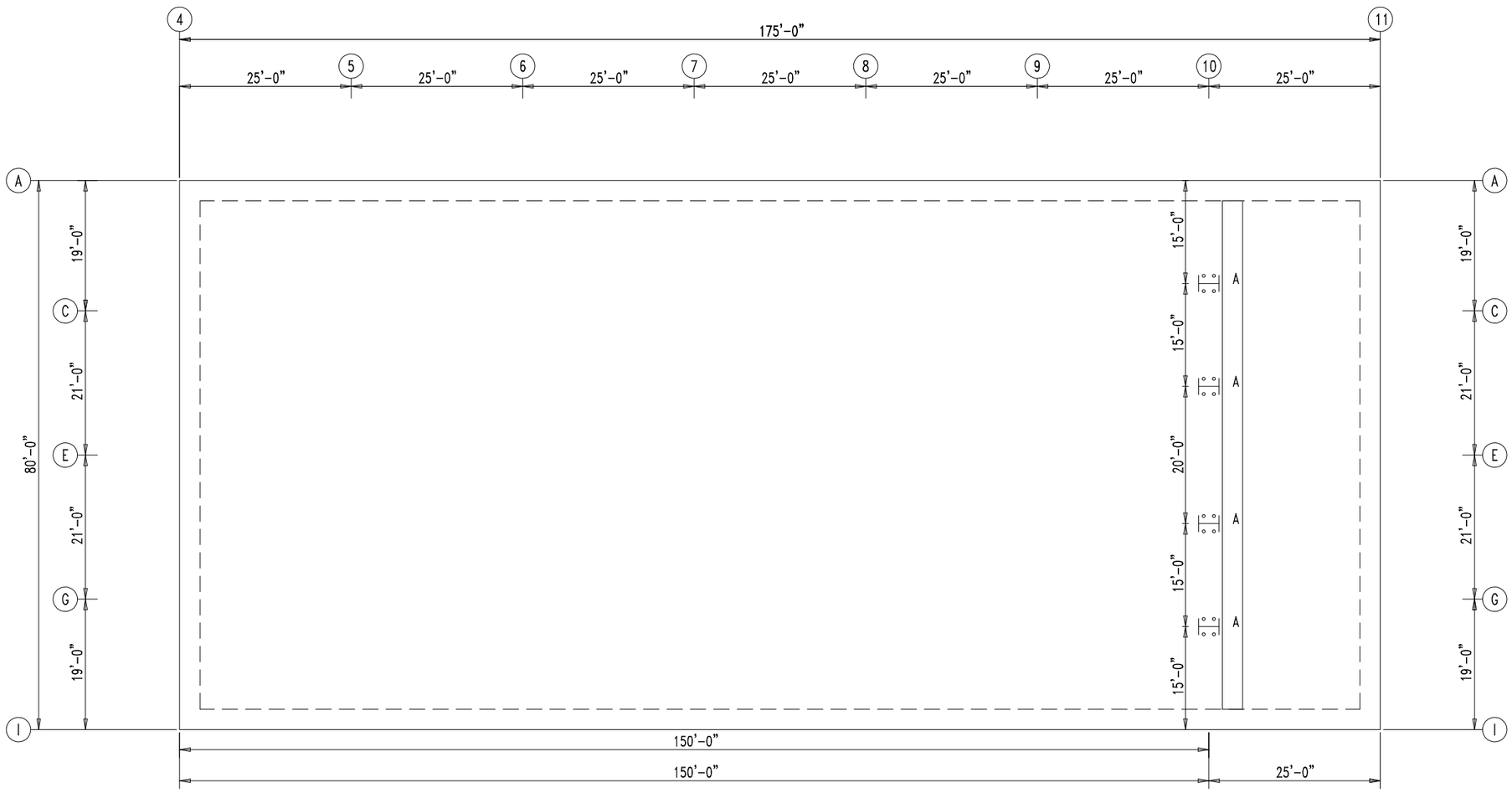

PARTITION WALL PLAN

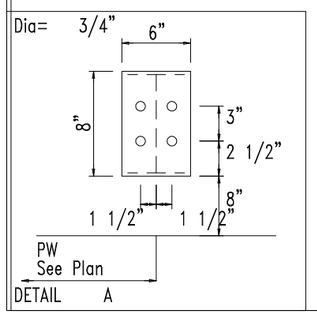

BUILD IT WITH STEEL
BUILD IT TO LAST
JNL
STEEL COMPONENTS, INC.
432-758-9900
430 US HWY 180 W
SEMINOLE,TX 79360

CUSTOMER INFO

PROJECT
PB50554
SHARP OILFIELD SERVICES
ODESSA TEXAS 79763

SHEET NAME/TITLE
KEY PLAN

DRAWN BY	DATE
BN	4/19/23
CHECKED BY	DATE
BN	4/19/23
APPROVED BY	DATE
	4/19/23

SHEET NO.	REV.	SCALE
A5 of 5	--	NTS

REVISIONS

NO.	NOTES	BY	DATE
--	--	--	00-00-00

EXTENSION/CANOPY BOLTS ROOF PLAN				
MARK	QUAN	TYPE	DIA	LENGTH
EB-2	4	A325	3/4"	2 1/2"
EB-3	4	A325	3/4"	2 1/2"
EB-4	8	A325	3/4"	2 1/2"
EB-5	4	A325	3/4"	2 1/2"
EB-8	4	A325	3/4"	2 1/2"
EB-9	8	A325	3/4"	2 1/2"
EB-10	4	A325	3/4"	2 1/2"
EB-11	4	A325	3/4"	2 1/2"

TRIM TABLE ROOF PLAN		
◇ID	MARK	LENGTH
1	PBR40	3'-0"
2	LEFT	6"
3	SG1R	22'-6"
4	SG1R	24'-6"
5	RIGHT	6"

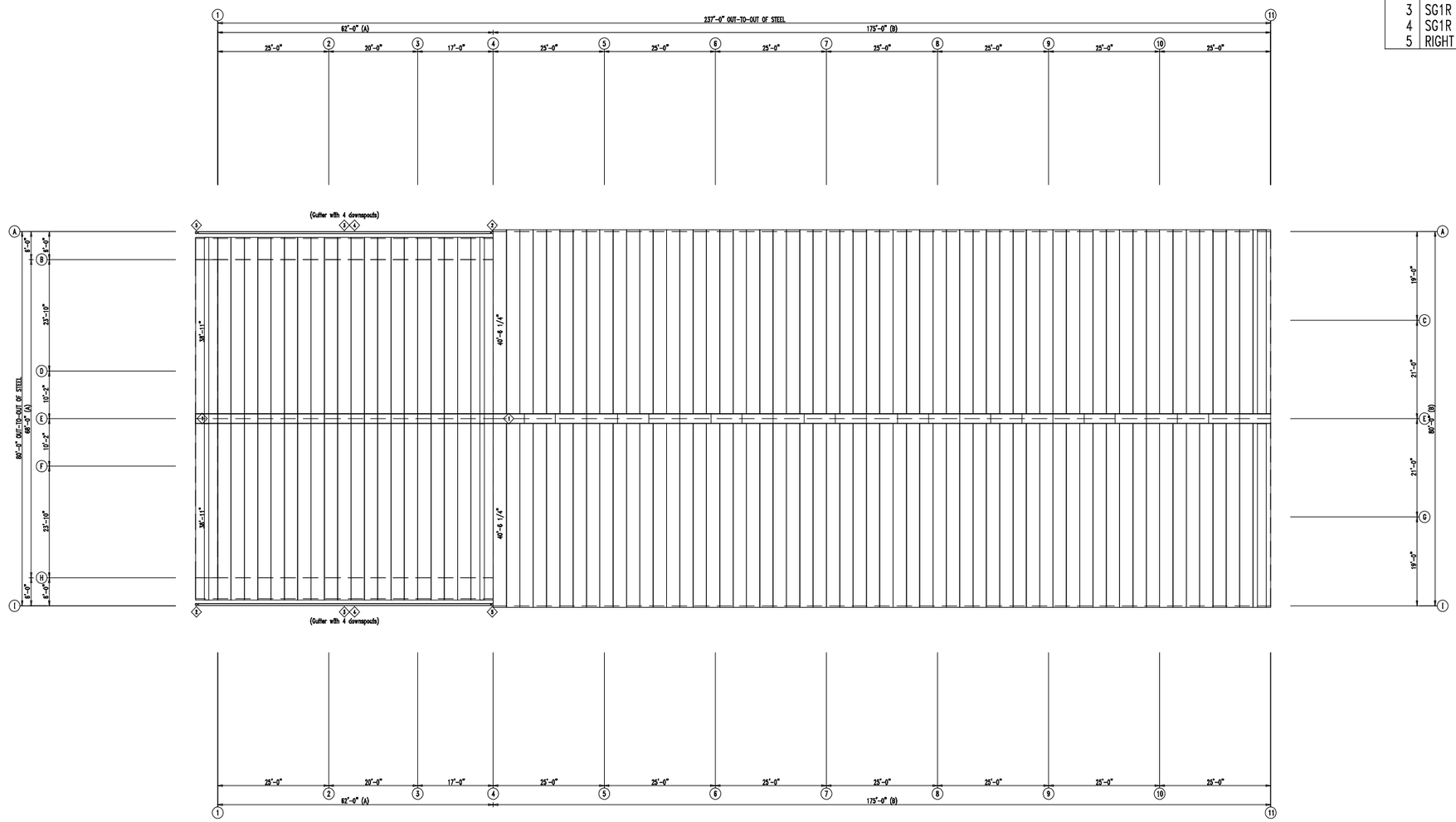

ROOF SHEETING PLAN

PANELS: 26 Ga. PBR – Polar White

BUILD IT WITH STEEL BUILD IT TO LAST
JNL STEEL COMPONENTS, INC.
432-758-9900
430 US HWY 180 W
SEMINOLE,TX 79360

CUSTOMER INFO

PROJECT
PB50554
SHARP OILFIELD SERVICES
ODESSA TEXAS 79763

SHEET NAME/TITLE
ROOF SHEETING

DRAWN BY	DATE
BN	5/23/23
CHECKED BY	DATE
BN	5/23/23
APPROVED BY	DATE
.	5/23/23

SHEET NO.	REV.	SCALE
E2 of 55--		NTS

REVISIONS			
NO.	NOTES	BY	DATE
--	--	--	00-00-00

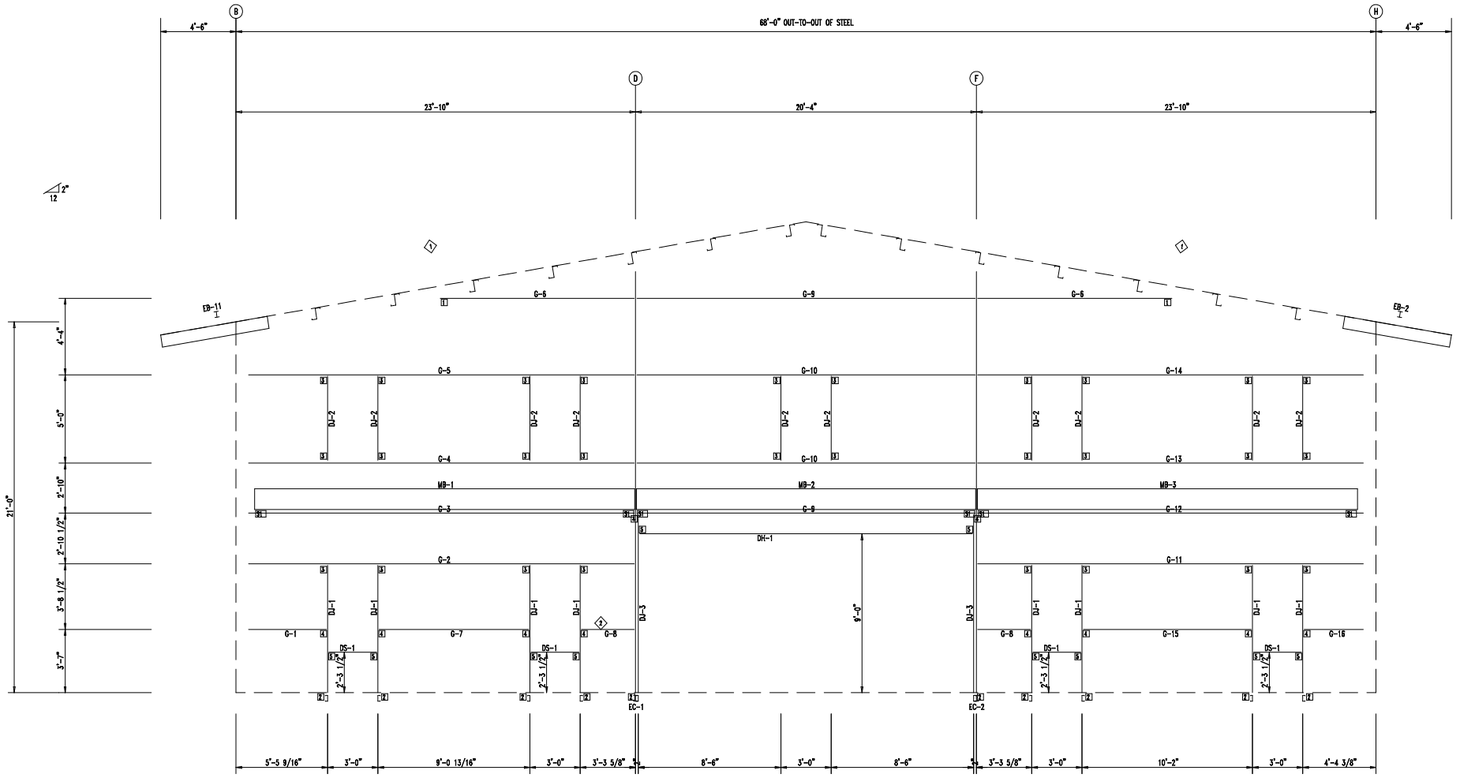

ENDWALL FRAMING: FRAME LINE 2

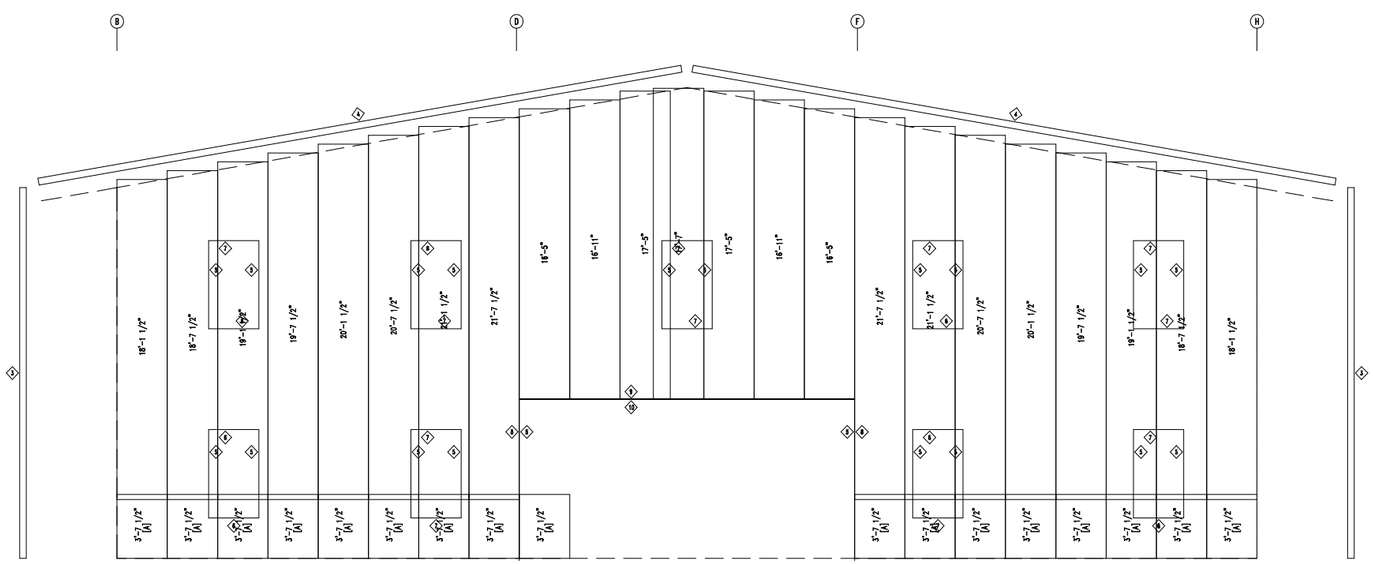

ENDWALL SHEETING & TRIM: FRAME LINE 2

PANELS: 26 Ga. PBR - Desert Sand

[A] PANELS: 26 Ga. PBR - Dark Bronze

BOLT TABLE
FRAME LINE 2

LOCATION	QUAN	TYPE	DIA	LENGTH
Columns/Raf	2	A325	1/2"	1 1/4"

ANGLE TABLE
FRAME LINE 2

◇ID	MARK	LENGTH	DETAIL
1	L4X2	20'-0"	ANGLE_6
2	L4X2	20'-0"	

SUPPORT BEAM BOLT TABLE
FRAME LINE 2

□ID	QUAN	TYPE	DIA	LENGTH
S1	3	A325	1/2"	1 1/4"

MEMBER TABLE
FRAME LINE 2

MARK	PART	LENGTH
EB-2	W8X10	6'-2 1/8"
EB-11	W8X10	6'-2 1/8"
EC-1	W1064030	22'-10 1/2"
EC-2	W1064030	22'-10 1/2"
DJ-1	8X25C14	7'-2 7/8"
DJ-2	8X25C14	4'-11 1/2"
DJ-3	8X25C14	9'-9 7/8"
DH-1	8X25C14	19'-11 1/2"
DS-1	8X25C14	2'-11 1/2"
G-1	8X25C14	4'-0 13/16"
G-2	8X25C14	22'-5 1/4"
G-3	8X25C14	22'-5 1/8"
G-4	8X25C14	22'-5 1/8"
G-5	8X25C14	22'-5 1/8"
G-6	8X25C14	3'-7 1/8"
G-7	8X25C14	8'-5 5/16"
G-8	8X25C14	2'-8 1/8"
G-9	8X25C14	19'-8 1/2"
G-10	8X25C14	19'-8 1/2"
G-11	8X25C14	22'-5 1/4"
G-12	8X25C14	22'-5 1/4"
G-13	8X25C14	22'-5 1/8"
G-14	8X25C14	22'-5 1/8"
G-15	8X25C14	9'-6 1/2"
G-16	8X25C14	2'-11 5/8"
MB-1	W1466020	22'-8"
MB-2	W1464020	20'-2 3/4"
MB-3	W1466020	22'-8 1/8"

TRIM TABLE
FRAME LINE 2

◇ID	MARK	LENGTH
3	OCR	22'-6"
4	TR12	18'-6"
5	JTR	10'-6"
6	HTR	10'-6"
7	HTR	SCRAP
8	JC08	10'-6"
9	JC08	21'-0"
10	HTR	21'-0"

CONNECTION PLATES
FRAME LINE 2

□ID	MARK/PART
1	b1
2	DC-1
3	OC-3
4	OC-1
5	OC-2

BUILD IT WITH STEEL BUILD IT TO LAST
JNL STEEL COMPONENTS, INC.
432-758-9900
430 US HWY 180 W
SEMINOLE,TX 79360

CUSTOMER INFO

PROJECT
PB50554
SHARP OILFIELD SERVICES
ODESSA TEXAS 79763

SHEET NAME/TITLE
ENDWALL FRAMING

DRAWN BY	DATE
BN	8/31/23
CHECKED BY	DATE
BN	8/31/23
APPROVED BY	DATE
.	8/31/23

SHEET NO.	REV.	SCALE
PN	--	NTS

REVISIONS

NO.	NOTES	BY	DATE
--	--	--	00-00-00

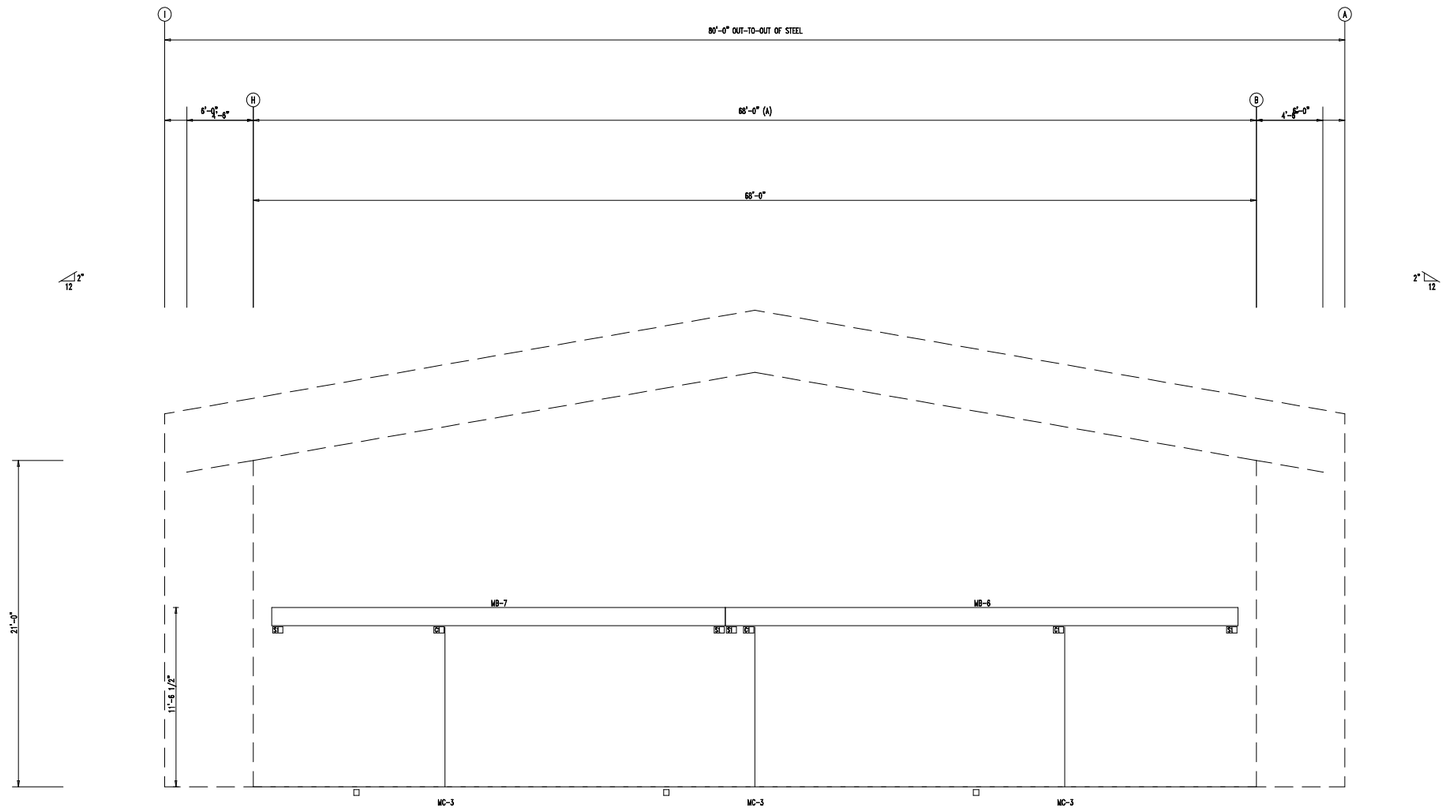

ENDWALL FRAMING: FRAME LINE 4

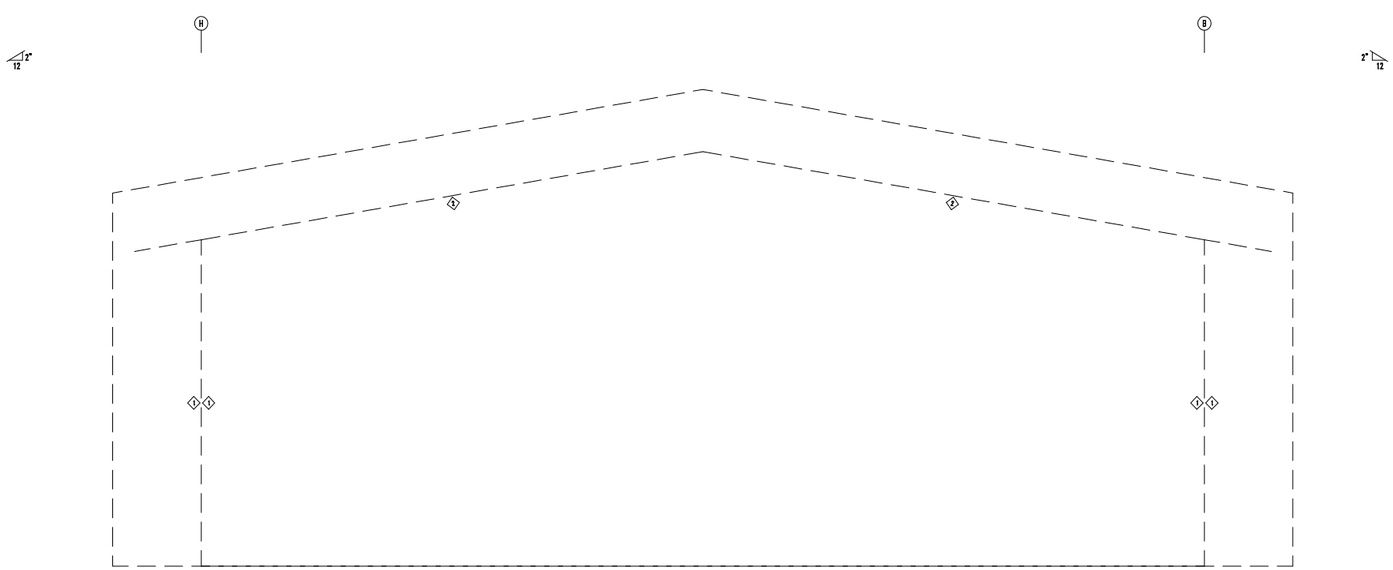

ENDWALL SHEETING & TRIM: FRAME LINE 4

SUPPORT BEAM BOLT TABLE
FRAME LINE 4

☐ID	QUAN	TYPE	DIA	LENGTH
S1	6	A325	3/4"	2 1/2"

COLUMN BOLT TABLE
FRAME LINE 4

☐ID	QUAN	TYPE	DIA	LENGTH
C1	4	A325	3/4"	2 1/2"

MEMBER TABLE
FRAME LINE 4

MARK	PART	LENGTH
MB-6	W1464020	34'-9"
MB-7	W1464020	30'-9"
MC-3	T035035D	10'-4 1/2"

TRIM TABLE
FRAME LINE 4

◇ID	MARK	LENGTH
1	ICR	21'-0"
2	SWTR	18'-6"

BUILD IT WITH STEEL
BUILD IT TO LAST
JNL
STEEL COMPONENTS, INC.
432-758-9900
430 US HWY 180 W
SEMINOLE,TX 79360

CUSTOMER INFO

PROJECT
PB50554
SHARP OILFIELD SERVICES
ODESSA TEXAS 79763

SHEET NAME/TITLE
ENDWALL FRAMING

DRAWN BY	DATE
BN	5/23/23
CHECKED BY	DATE
BN	5/23/23
APPROVED BY	DATE
,	5/23/23

SHEET NO.	REV.	SCALE
E4 of 55--		NTS

REVISIONS

NO.	NOTES	BY	DATE
--	--	--	00-00-00

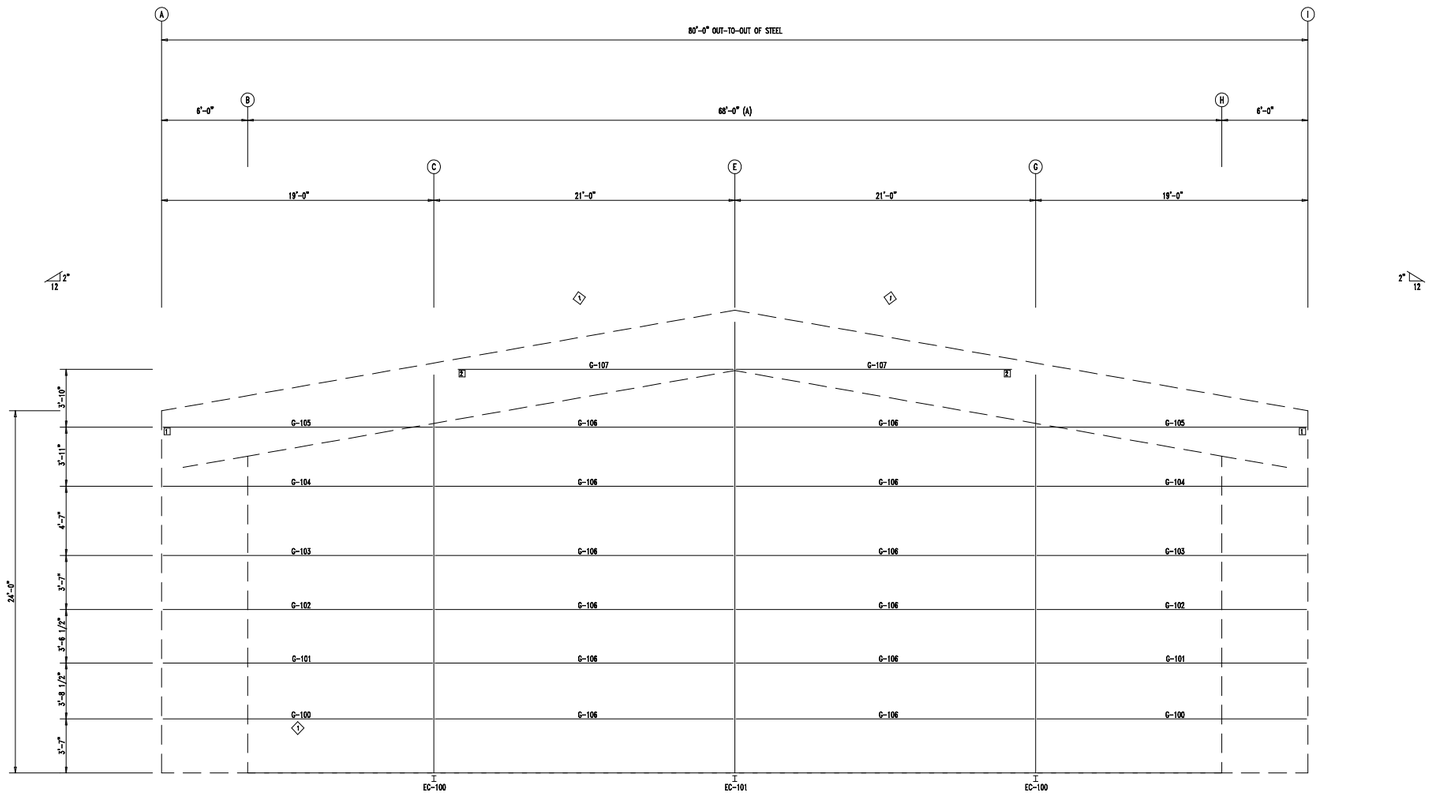

ENDWALL FRAMING: FRAME LINE 4

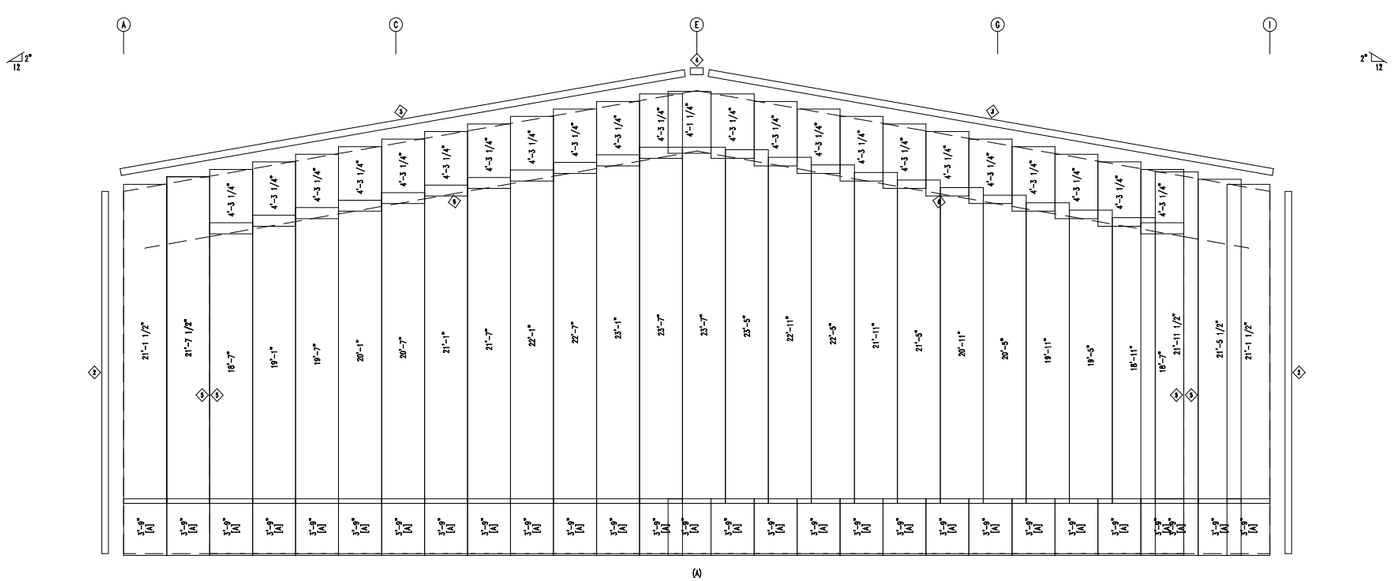

ENDWALL SHEETING & TRIM: FRAME LINE 4

PANELS: 26 Ga. PBR - Desert Sand

(A) PANELS: 26 Ga. PBR - Dark Bronze
(A) PANELS: 26 Ga. PBR - Desert Sand

BOLT TABLE
FRAME LINE 4

LOCATION	QUAN	TYPE	DIA	LENGTH
Columns/Raf	2	A325	1/2"	1 1/4"

MEMBER TABLE
FRAME LINE 4

MARK	PART	LENGTH
EC-100	W1064030	24'-10 5/8"
EC-101	W1064030	28'-2 1/2"
G-100	8X25Z14	17'-9 1/2"
G-101	8X25Z14	17'-7 7/16"
G-102	8X25Z14	17'-5 1/2"
G-103	8X25Z14	17'-3 1/2"
G-104	8X25Z14	17'-0 7/8"
G-105	8X25Z14	10'-10 13/16"
G-106	8X25Z14	20'-4 1/2"
G-107	8X25Z14	10'-3 11/16"

TRIM TABLE
FRAME LINE 4

◇ID	MARK	LENGTH
2	OCR	24'-6"
3	SRR	21'-0"
4	PBA	2'-0"
5	ICR	21'-0"
6	SWTR	18'-6"

ANGLE TABLE
FRAME LINE 4

◇ID	MARK	LENGTH
1	L4X2	20'-0"

CONNECTION PLATES
FRAME LINE 4

□ID	MARK/PART
1	b100
2	b101

BUILD IT WITH STEEL
BUILD IT TO LAST
JNL
STEEL COMPONENTS, INC.
432-758-9900
430 US HWY 180 W
SEMINOLE,TX 79360

CUSTOMER INFO

PROJECT
PB50554
SHARP OILFIELD SERVICES
ODESSA TEXAS 79763

SHEET NAME/TITLE
ENDWALL FRAMING

DRAWN BY	DATE
BN	5/23/23
CHECKED BY	DATE
BN	5/23/23
APPROVED BY	DATE
.	5/23/23

SHEET NO.	REV.	SCALE
E5 of 55--		NTS

REVISIONS

NO.	NOTES	BY	DATE
--	--	--	00-00-00

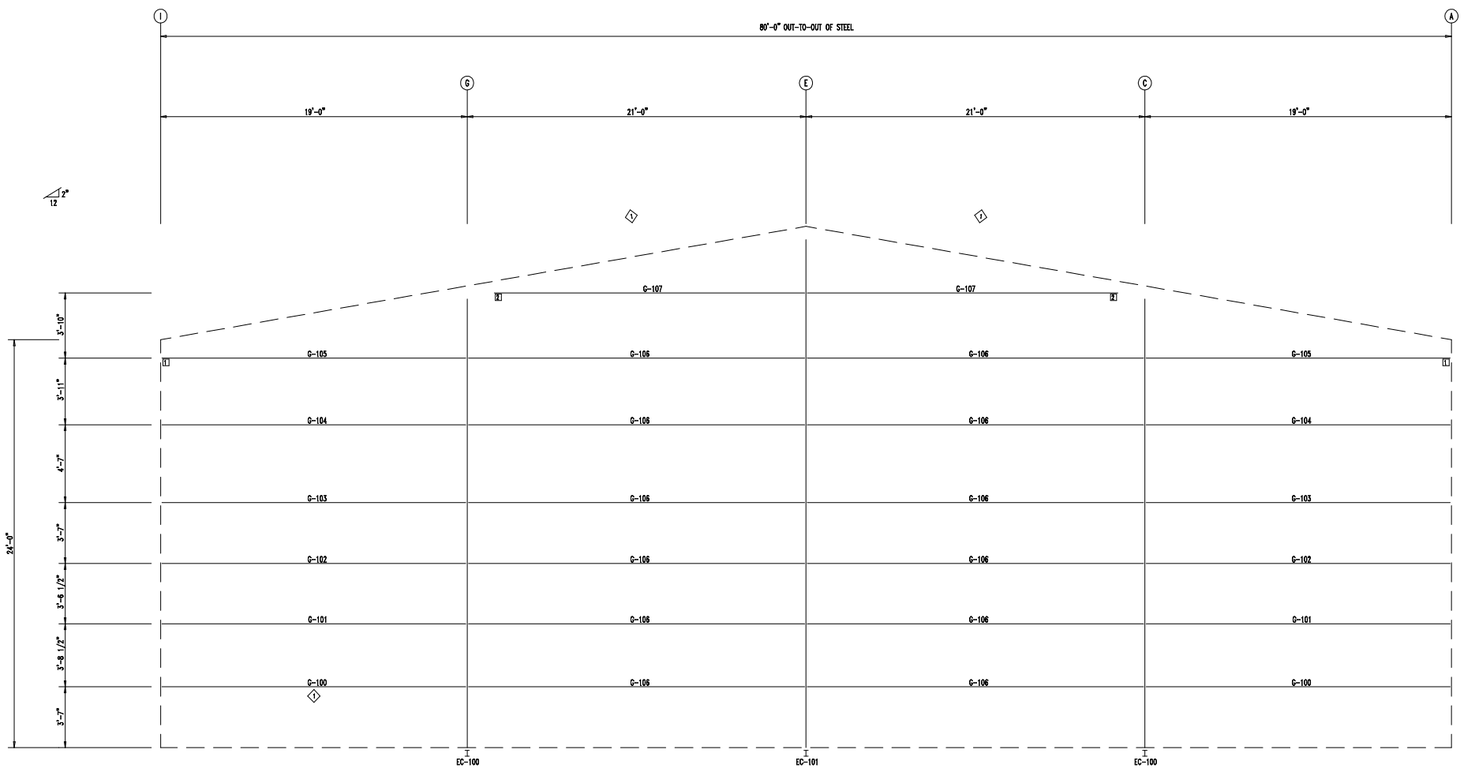

ENDWALL FRAMING: FRAME LINE 11

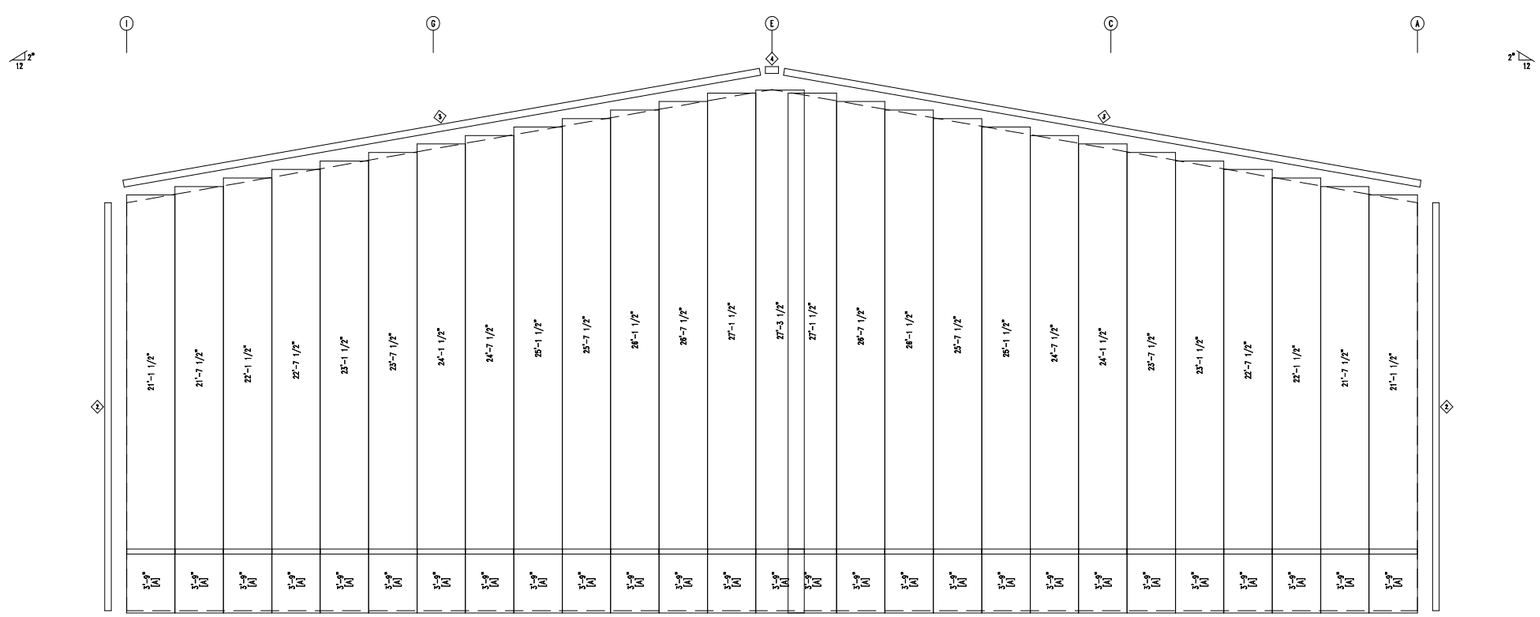

ENDWALL SHEETING & TRIM: FRAME LINE 11

PANELS: 28 Ga. PBR – Desert Sand

(A) PANELS: 26 Ga. PBR – Dark Bronze

BOLT TABLE
FRAME LINE 11

LOCATION	QUAN	TYPE	DIA	LENGTH
Columns/Raf	2	A325	1/2"	1 1/4"

MEMBER TABLE
FRAME LINE 11

MARK	PART	LENGTH
EC-100	W1064030	24'-10 5/8"
EC-101	W1064030	28'-2 1/2"
G-100	8X25Z14	17'-9 1/2"
G-101	8X25Z14	17'-7 7/16"
G-102	8X25Z14	17'-5 1/2"
G-103	8X25Z14	17'-3 1/2"
G-104	8X25Z14	17'-0 7/8"
G-105	8X25Z14	10'-10 13/16"
G-106	8X25Z14	20'-4 1/2"
G-107	8X25Z14	10'-3 11/16"

TRIM TABLE
FRAME LINE 11

◇ID	MARK	LENGTH
2	OCR	24'-6"
3	SRR	21'-0"
4	PBA	2'-0"

ANGLE TABLE
FRAME LINE 11

◇ID	MARK	LENGTH
1	L4X2	20'-0"

CONNECTION PLATES
FRAME LINE 11

□ID	MARK/PART
1	b100
2	b101

BUILD IT WITH STEEL
BUILD IT TO LAST
JNL
STEEL COMPONENTS, INC.
432-758-9900
430 US HWY 180 W
SEMINOLE,TX 79360

CUSTOMER INFO

PROJECT
PB50554
SHARP OILFIELD SERVICES
ODESSA TEXAS 79763

SHEET NAME/TITLE
ENDWALL FRAMING

DRAWN BY	DATE
BN	5/23/23
CHECKED BY	DATE
BN	5/23/23
APPROVED BY	DATE
.	5/23/23

SHEET NO.	REV.	SCALE
E6 of 55--		NTS

REVISIONS

NO.	NOTES	BY	DATE
--	--	--	00-00-00

TRIM TABLE FRAME LINE 1		
◇ID	MARK	LENGTH
1	SRR	18'-6"
2	PBA	2'-0"

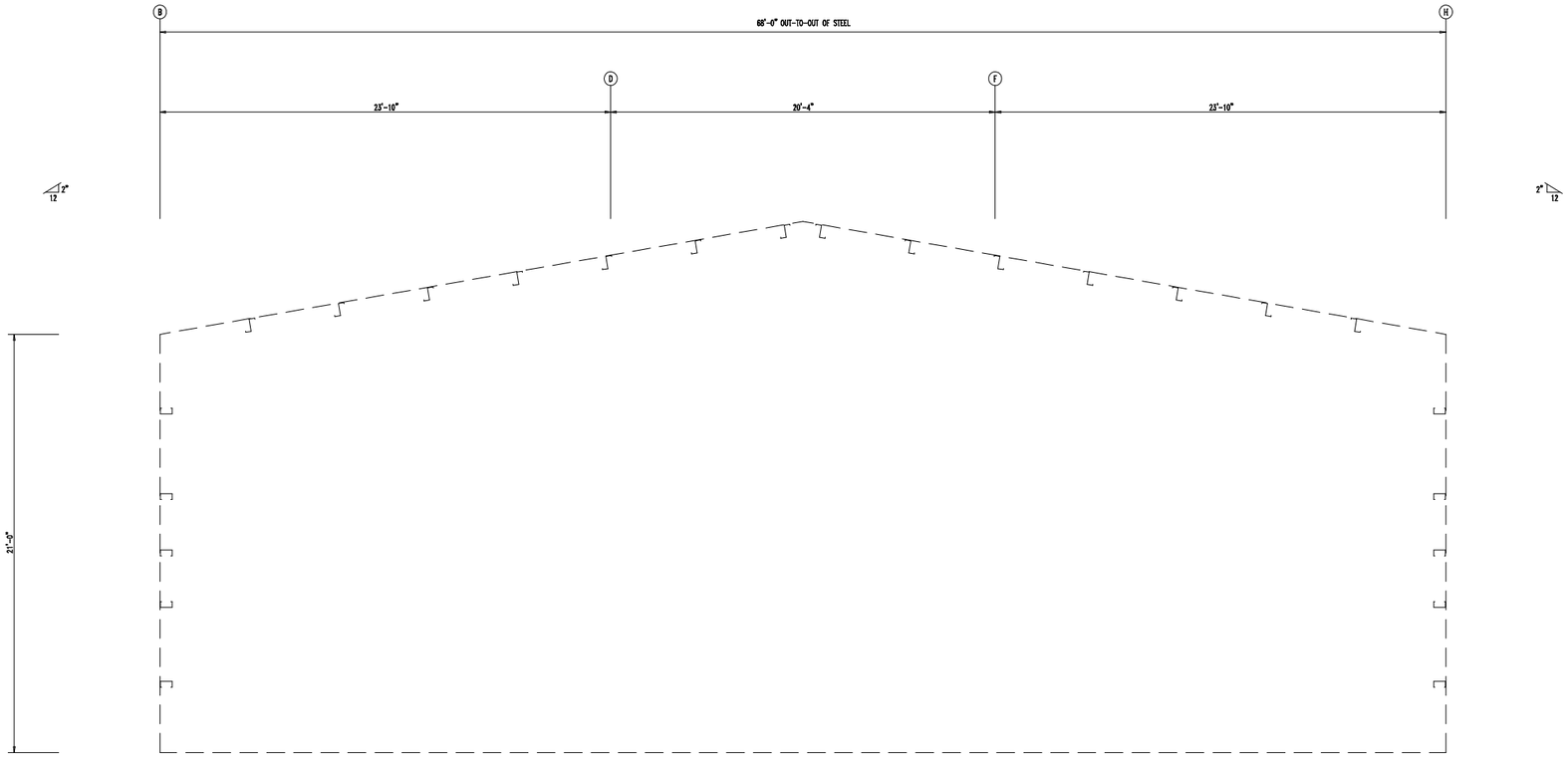

ENDWALL FRAMING: FRAME LINE 1

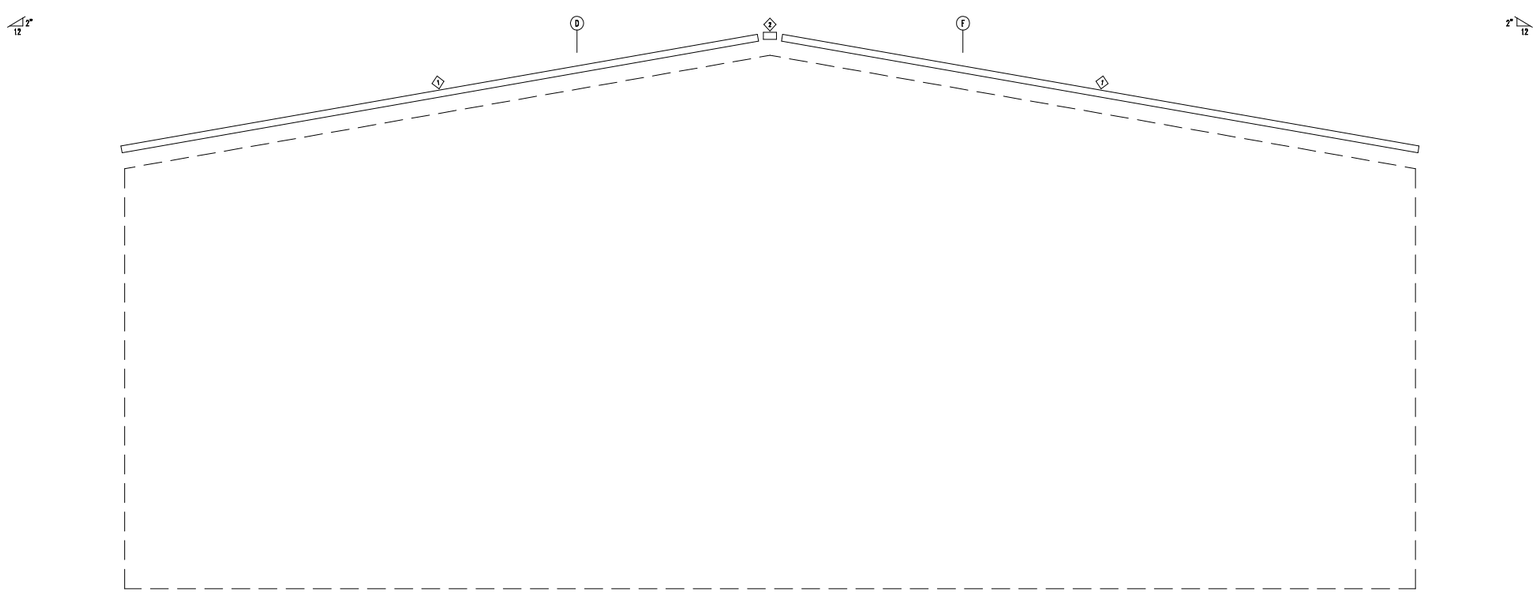

ENDWALL SHEETING & TRIM: FRAME LINE 1

BUILD IT WITH STEEL
BUILD IT TO LAST
JNL
STEEL COMPONENTS, INC.
432-758-9900
430 US HWY 180 W
SEMINOLE,TX 79360

CUSTOMER INFO

PROJECT
PB50554
SHARP OILFIELD SERVICES
ODESSA TEXAS 79763

SHEET NAME/TITLE
SIDEWALL FRAMING

DRAWN BY	DATE
BN	5/23/23
CHECKED BY	DATE
BN	5/23/23
APPROVED BY	DATE
.	5/23/23

SHEET NO.	REV.	SCALE
E7 of 55--		NTS

REVISIONS

NO.	NOTES	BY	DATE
--	--	--	00-00-00

DOWNSPOUT LOCATIONS

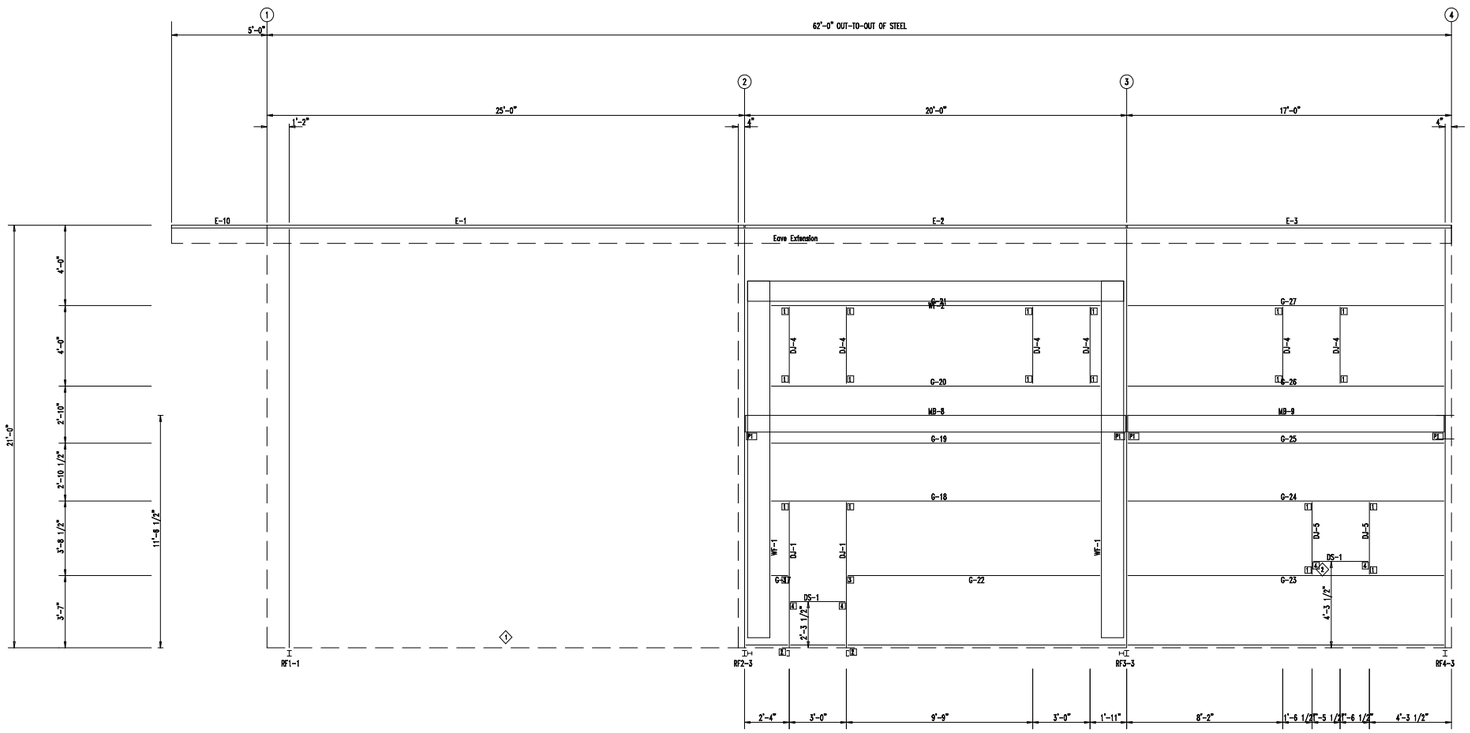

SIDEWALL FRAMING: FRAME LINE H

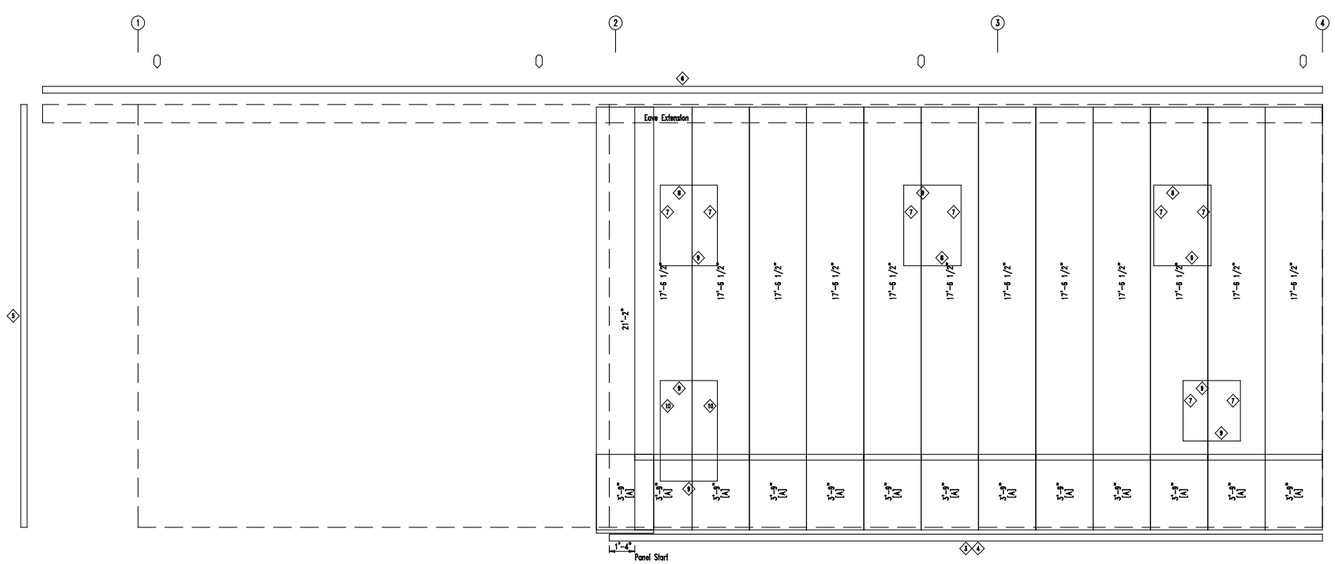

SIDEWALL SHEETING & TRIM: FRAME LINE H

PANELS: 26 Ga. PBR - Desert Sand

(A) PANELS: 26 Ga. PBR - Dark Bronze

BOLT TABLE
FRAME LINE H

LOCATION	QUAN	TYPE	DIA	LENGTH
WF-1 - WF-2	8	A325	3/4"	2 1/2"
WF-1 - RF2-3	14	A325	5/8"	2"
WF-1 - RF3-3	14	A325	5/8"	2"

PERIMETER BEAM BOLT TABLE
FRAME LINE H

☐ID	QUAN	TYPE	DIA	LENGTH
P1	2	A325	1/2"	1 1/2"

MEMBER TABLE
FRAME LINE H

MARK	PART	LENGTH
WF-1	W1464020	17'-10 1/2"
WF-2	W1264030	17'-7 3/8"
DJ-1	8X25C14	7'-2 7/8"
DJ-4	8X25C14	3'-11 1/2"
DJ-5	8X25C14	3'-8"
DS-1	8X25C14	2'-11 1/2"
E-1	8X25Z14	23'-1 1/4"
E-2	E085342L	19'-3 1/4"
E-3	E085342L	15'-11 1/4"
E-10	8X25Z14	5'-5 5/8"
G-17	8X25C14	1'-1 15/16"
G-18	8X25C14	17'-7 3/8"
G-19	8X25C14	17'-7 3/8"
G-20	8X25C14	17'-7 3/8"
G-21	8X25C14	17'-7 3/8"
G-22	8X25C14	12'-9 15/16"
G-23	8X25C14	15'-11 1/4"
G-24	8X25C14	15'-11 1/4"
G-25	8X25C14	15'-11 1/4"
G-26	8X25C14	15'-11 1/4"
G-27	8X25C14	15'-11 1/4"
MB-8	W10X12	19'-10 3/4"
MB-9	W10X12	16'-6 3/4"

TRIM TABLE
FRAME LINE H

◇ID	MARK	LENGTH
3	SBPR	10'-6"
4	NAIL I	1'-0"
5	OCR	22'-6"
6	LEA	21'-0"
7	JTR	SCRAP
8	HTR	10'-6"
9	HTR	SCRAP
10	JTR	10'-6"

ANGLE TABLE
FRAME LINE H

◇ID	MARK	LENGTH
1	8" REC	20'-0"
2	L4X2	20'-0"

CONNECTION PLATES
FRAME LINE H

☐ID	MARK/PART
1	OC-3
2	DC-1
3	OC-1
4	OC-2

BUILD IT WITH STEEL
BUILD IT TO LAST
JNL
STEEL COMPONENTS, INC.
432-758-9900
430 US HWY 180 W
SEMINOLE,TX 79360

CUSTOMER INFO

PROJECT
PB50554
SHARP OILFIELD SERVICES
ODESSA TEXAS 79763

SHEET NAME/TITLE
SIDEWALL FRAMING

DRAWN BY	DATE
BN	8/31/23
CHECKED BY	DATE
BN	8/31/23
APPROVED BY	DATE
.	8/31/23

SHEET NO.	REV.	SCALE
PN	--	NTS

REVISIONS

NO.	NOTES	BY	DATE
--	--	--	00-00-00

DOWNSPOUT LOCATIONS

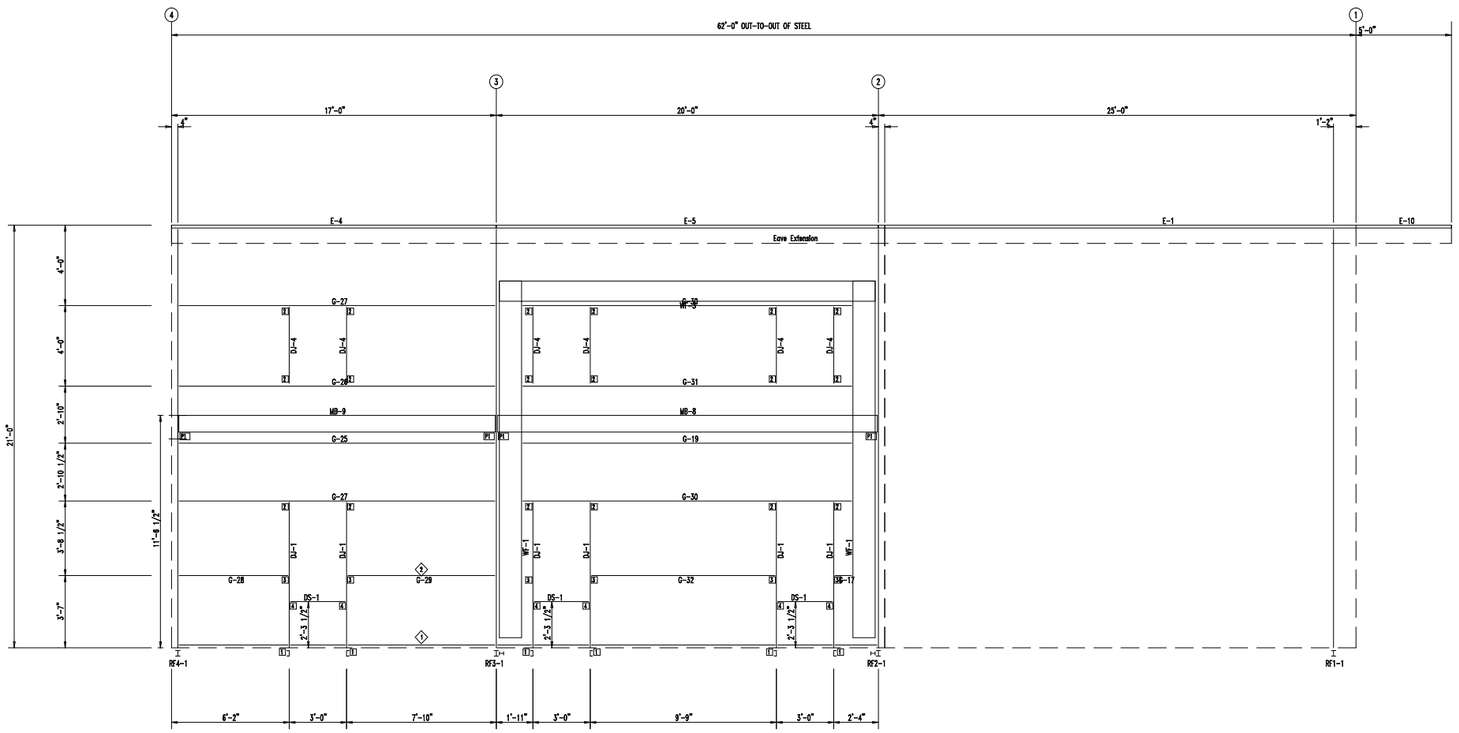

SIDEWALL FRAMING: FRAME LINE B

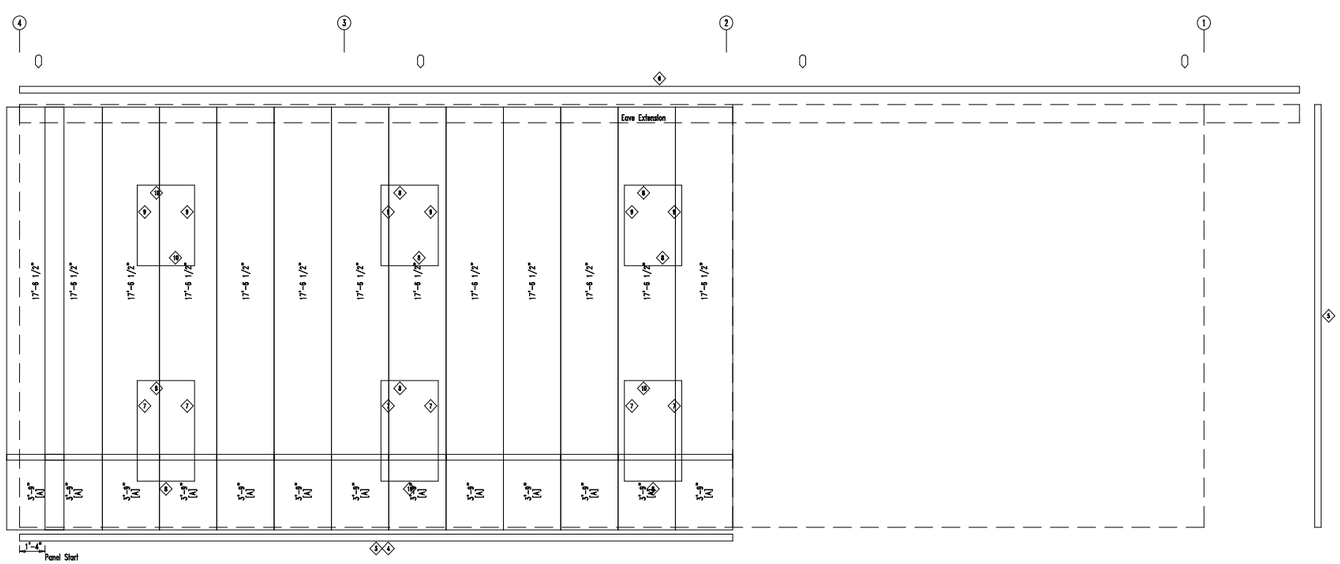

SIDEWALL SHEETING & TRIM: FRAME LINE B

PANELS: 26 Ga. PBR - Desert Sand

(A) PANELS: 26 Ga. PBR - Dark Bronze

BOLT TABLE
FRAME LINE B

LOCATION	QUAN	TYPE	DIA	LENGTH
WF-1 - WF-3	8	A325	3/4"	2 1/2"
WF-1 - RF3-1	14	A325	5/8"	2"
WF-1 - RF2-1	14	A325	5/8"	2"

PERIMETER BEAM BOLT TABLE
FRAME LINE B

□ID	QUAN	TYPE	DIA	LENGTH
P1	2	A325	1/2"	1 1/2"

MEMBER TABLE
FRAME LINE B

MARK	PART	LENGTH
WF-1	W1464020	17'-10 1/2"
WF-3	W1264030	17'-7 3/8"
DJ-1	8X25C14	7'-2 7/8"
DJ-4	8X25C14	3'-11 1/2"
DS-1	8X25C14	2'-11 1/2"
E-1	8X25Z14	23'-1 1/4"
E-4	E085342L	15'-11 1/4"
E-5	E085342L	19'-3 1/4"
E-10	8X25Z14	5'-5 5/8"
G-17	8X25C14	1'-1 15/16"
G-19	8X25C14	17'-7 3/8"
G-25	8X25C14	15'-11 1/4"
G-26	8X25C14	15'-11 1/4"
G-27	8X25C14	15'-11 1/4"
G-28	8X25C14	4'-9 7/8"
G-29	8X25C14	7'-5 7/8"
G-30	8X25C14	17'-7 3/8"
G-31	8X25C14	17'-7 3/8"
G-32	8X25C14	13'-7 7/16"
MB-8	W10X12	19'-10 3/4"
MB-9	W10X12	16'-6 3/4"

TRIM TABLE
FRAME LINE B

◇ID	MARK	LENGTH
3	SBPR	SCRAP
4	NAIL I	SCRAP
5	OCR	22'-6"
6	LEA	21'-0"
7	JTR	10'-6"
8	HTR	SCRAP
9	JTR	SCRAP
10	HTR	10'-6"

ANGLE TABLE
FRAME LINE B

◇ID	MARK	LENGTH
1	8" REC	SCRAP
2	L4X2	20'-0"

CONNECTION PLATES
FRAME LINE B

□ID	MARK/PART
1	DC-1
2	OC-3
3	OC-1
4	OC-2

BUILD IT WITH STEEL
BUILD IT TO LAST
JNL
STEEL COMPONENTS, INC.
432-758-9900
430 US HWY 180 W
SEMINOLE,TX 79360

CUSTOMER INFO

PROJECT
PB50554
SHARP OILFIELD SERVICES
ODESSA TEXAS 79763

SHEET NAME/TITLE
SIDEWALL FRAMING

DRAWN BY	DATE
BN	8/31/23
CHECKED BY	DATE
BN	8/31/23
APPROVED BY	DATE
.	8/31/23

SHEET NO.	REV.	SCALE
PN	--	NTS

REVISIONS

NO.	NOTES	BY	DATE
--	--	--	00-00-00

DOWNSPOUT LOCATIONS

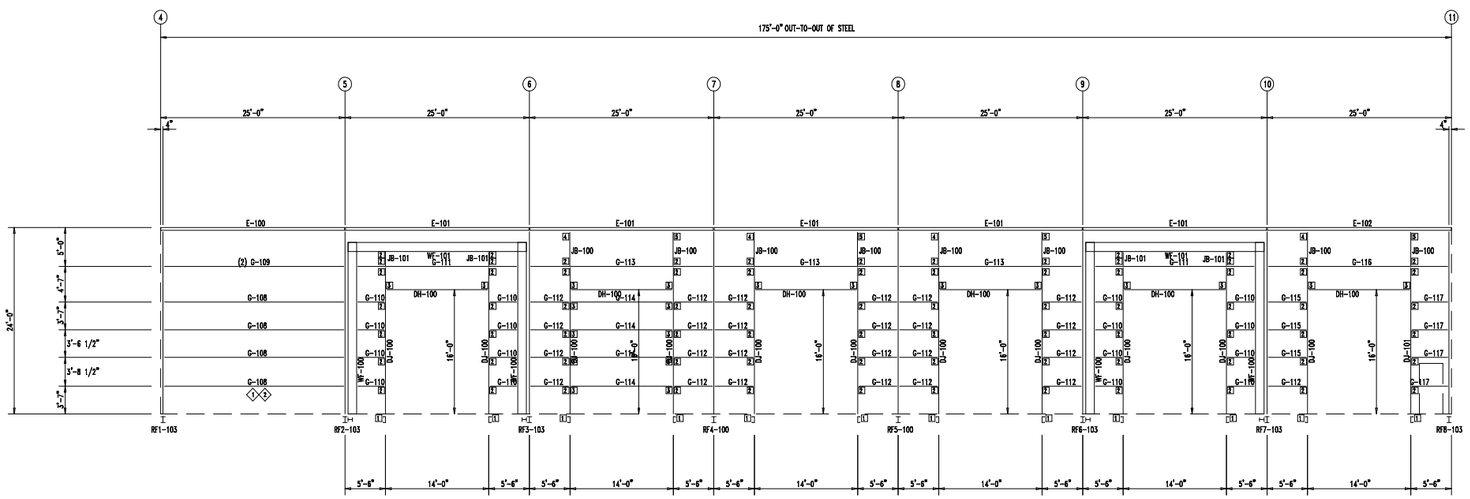

SIDEWALL FRAMING: FRAME LINE 1

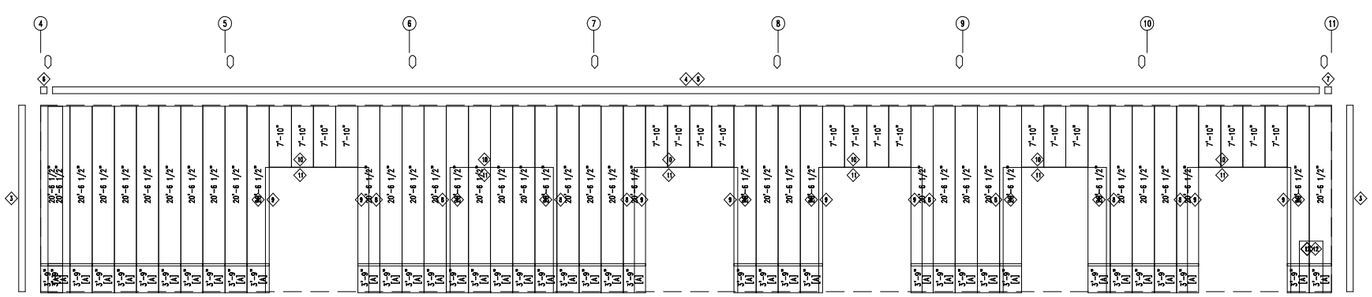

SIDEWALL SHEETING & TRIM: FRAME LINE 1

PANELS: 26 Ga. PBR – Desert Sand

[A] PANELS: 26 Ga. PBR – Dark Bronze

BOLT TABLE
FRAME LINE 1

LOCATION	QUAN	TYPE	DIA	LENGTH
WF-100 - WF-101	8	A325	3/4"	2 1/2"
WF-100 - RF2-103	32	A325	5/8"	2"
WF-100 - RF3-103	32	A325	5/8"	2"
WF-100 - RF6-103	32	A325	5/8"	2"
WF-100 - RF7-103	32	A325	5/8"	2"

MEMBER TABLE
FRAME LINE 1

MARK	PART	LENGTH
WF-100	W1464020	22'-6"
WF-101	W1464020	21'-3 3/8"
DJ-100	8X25C14	18'-7 7/8"
DJ-101	8X25C12	18'-7 7/8"
DH-100	8X25C14	13'-11 1/2"
E-100	E085342L	24'-11 1/2"
E-101	E085342L	24'-11 1/2"
E-102	E085342L	24'-11 1/2"
G-108	8X25Z14	23'-11 1/4"
G-109	8X25Z14	23'-11 1/4"
G-110	8X25Z14	3'-3 15/16"
G-111	8X50D12	21'-3 3/8"
G-112	8X25Z14	4'-9 7/8"
G-113	8X50D12	24'-3 1/4"
G-114	8X25Z14	13'-11 1/2"
G-115	8X25Z14	4'-9 7/8"
G-116	8X50D12	23'-11 1/4"
G-117	8X25Z14	4'-5 7/8"
JB-100	8X25C14	3'-11 5/8"
JB-101	8X25C14	1-8 9/16"

TRIM TABLE
FRAME LINE 1

◇ID	MARK	LENGTH
3	OCR	24'-6"
4	SG1R	21'-0"
5	SG1R	26'-3"
6	LEFT	6"
7	RIGHT	6"
8	JC08	16'-6"
9	JTR	16'-6"
10	JC08	14'-6"
11	HTR	14'-6"
12	JTR	10'-6"
13	HTR	10'-6"

ANGLE TABLE
FRAME LINE 1

◇ID	MARK	LENGTH
1	L4X2	20'-0"
2	L4X2	SCRAP

CONNECTION PLATES
FRAME LINE 1

□ID	MARK/PART
1	DC-1
2	OC-1
3	OC-2

BUILD IT WITH STEEL BUILD IT TO LAST
JNL
STEEL COMPONENTS, INC.
432-758-9900
430 US HWY 180 W
SEMINOLE, TX 79360

CUSTOMER INFO

PROJECT
PB50554
SHARP OILFIELD SERVICES
ODESSA TEXAS 79763

SHEET NAME/TITLE
SIDEWALL FRAMING

DRAWN BY	DATE
BN	5/23/23
CHECKED BY	DATE
BN	5/23/23
APPROVED BY	DATE
.	5/23/23

SHEET NO.	REV.	SCALE
E10 of 55	--	NTS

REVISIONS

NO.	NOTES	BY	DATE
--	--	--	00-00-00

DOWNSPOUT LOCATIONS

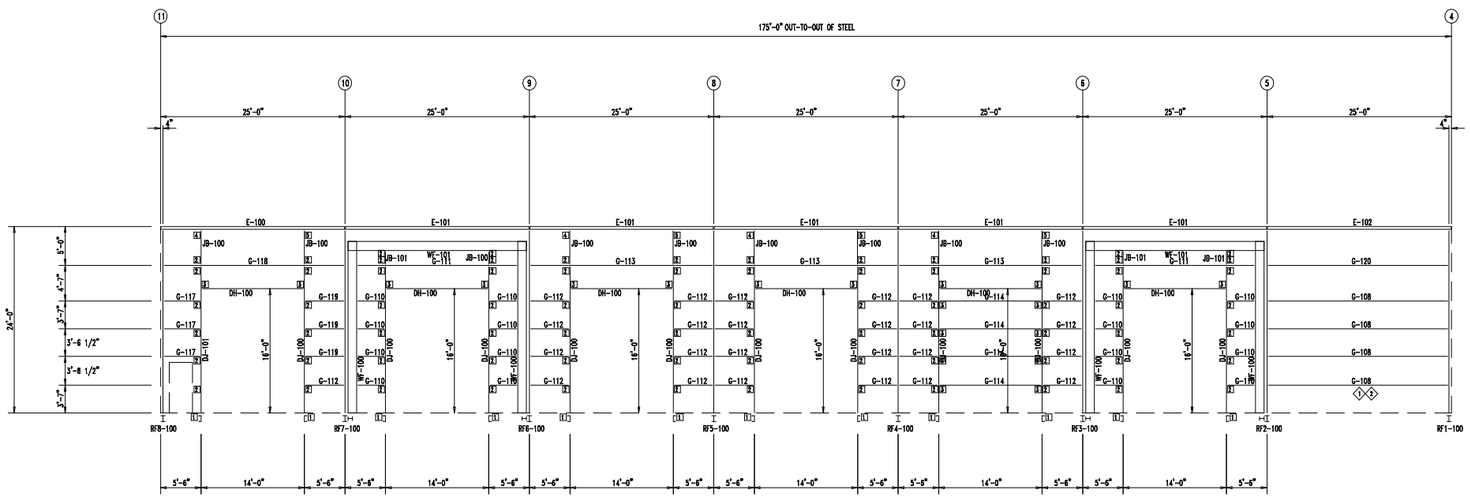

SIDEWALL FRAMING: FRAME LINE A

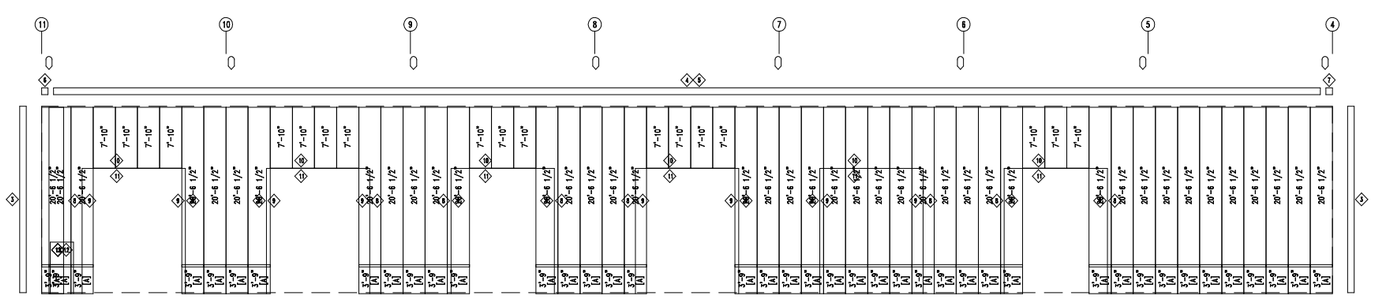

SIDEWALL SHEETING & TRIM: FRAME LINE A

PANELS: 26 Ga. PBR - Desert Sand

[A] PANELS: 26 Ga. PBR - Dark Bronze

BOLT TABLE
FRAME LINE A

LOCATION	QUAN	TYPE	DIA	LENGTH
WF-100 - WF-101	8	A325	3/4"	2 1/2"
WF-100 - RF7-100	32	A325	5/8"	2"
WF-100 - RF6-100	32	A325	5/8"	2"
WF-100 - RF3-100	32	A325	5/8"	2"
WF-100 - RF2-100	32	A325	5/8"	2"

MEMBER TABLE
FRAME LINE A

MARK	PART	LENGTH
WF-100	W1464020	22'-6"
WF-101	W1464020	21'-3 3/8"
DJ-100	8X25C14	18'-7 7/8"
DJ-101	8X25C12	18'-7 7/8"
DH-100	8X25C14	13'-11 1/2"
E-100	E085342L	24'-11 1/2"
E-101	E085342L	24'-11 1/2"
E-102	E085342L	24'-11 1/2"
G-108	8X25Z14	23'-11 1/4"
G-110	8X25Z14	3'-3 15/16"
G-111	8X50D12	21'-3 3/8"
G-112	8X25Z14	4'-9 7/8"
G-113	8X50D12	24'-3 1/4"
G-114	8X25Z14	13'-11 1/2"
G-117	8X25Z14	4'-5 7/8"
G-118	8X50D12	23'-11 1/4"
G-119	8X25Z14	4'-9 7/8"
G-120	8X50D12	23'-11 1/4"
JB-100	8X25C14	3'-11 5/8"
JB-101	8X25C14	1'-8 9/16"

TRIM TABLE
FRAME LINE A

◇ID	MARK	LENGTH
3	OCR	24'-6"
4	SG1R	21'-0"
5	SG1R	26'-3"
6	LEFT	6"
7	RIGHT	6"
8	JC08	16'-6"
9	JTR	16'-6"
10	JC08	14'-6"
11	HTR	14'-6"
12	JTR	10'-6"
13	HTR	SCRAP

ANGLE TABLE
FRAME LINE A

◇ID	MARK	LENGTH
1	L4X2	20'-0"
2	L4X2	SCRAP

CONNECTION PLATES
FRAME LINE A

□ID	MARK/PART
1	DC-1
2	OC-1
3	OC-2

BUILD IT WITH STEEL BUILD IT TO LAST
JNL STEEL COMPONENTS, INC.
432-758-9900
430 US HWY 180 W
SEMINOLE, TX 79360

CUSTOMER INFO

PROJECT
PB50554
SHARP OILFIELD SERVICES
ODESSA TEXAS 79763

SHEET NAME/TITLE
SIDEWALL FRAMING

DRAWN BY	DATE
BN	5/23/23
CHECKED BY	DATE
BN	5/23/23
APPROVED BY	DATE
.	5/23/23

SHEET NO.	REV.	SCALE
E11 of 55	--	NTS

REVISIONS

NO.	NOTES	BY	DATE
--	--	--	00-00-00

SPLICE BOLT TABLE						
Mark	Qty Top	Bot	Int	Type	Dia	Length
SP-1	4	4	2	A325	0.750	2.50
SP-2	4	4	0	A325	0.750	2.50

▽ FLANGE BRACES: Both Sides(U.N.)
FBxxD(1): xx=length(in)
D - FB2X2X07

MEMBER TABLE					
Mark	Web Depth Start/End	Web Plate Thick	Web Plate Length	Outside Flange W x Thk x Length	Inside Flange W x Thk x Length
RF1-1	8.0/28.0	0.135	246.8	6 x 3/8" x 242.8 6 x 3/8" x 24.3	6 x 1/2" x 221.8
RF1-2	22.0/14.0 14.0/14.0	0.135 0.135	147.7 240.0	6 x 1/4" x 299.0 6 x 1/4" x 88.7	6 x 1/4" x 147.9 6 x 1/4" x 237.6
EB-2	W8X10				
EB-11	W8X10				

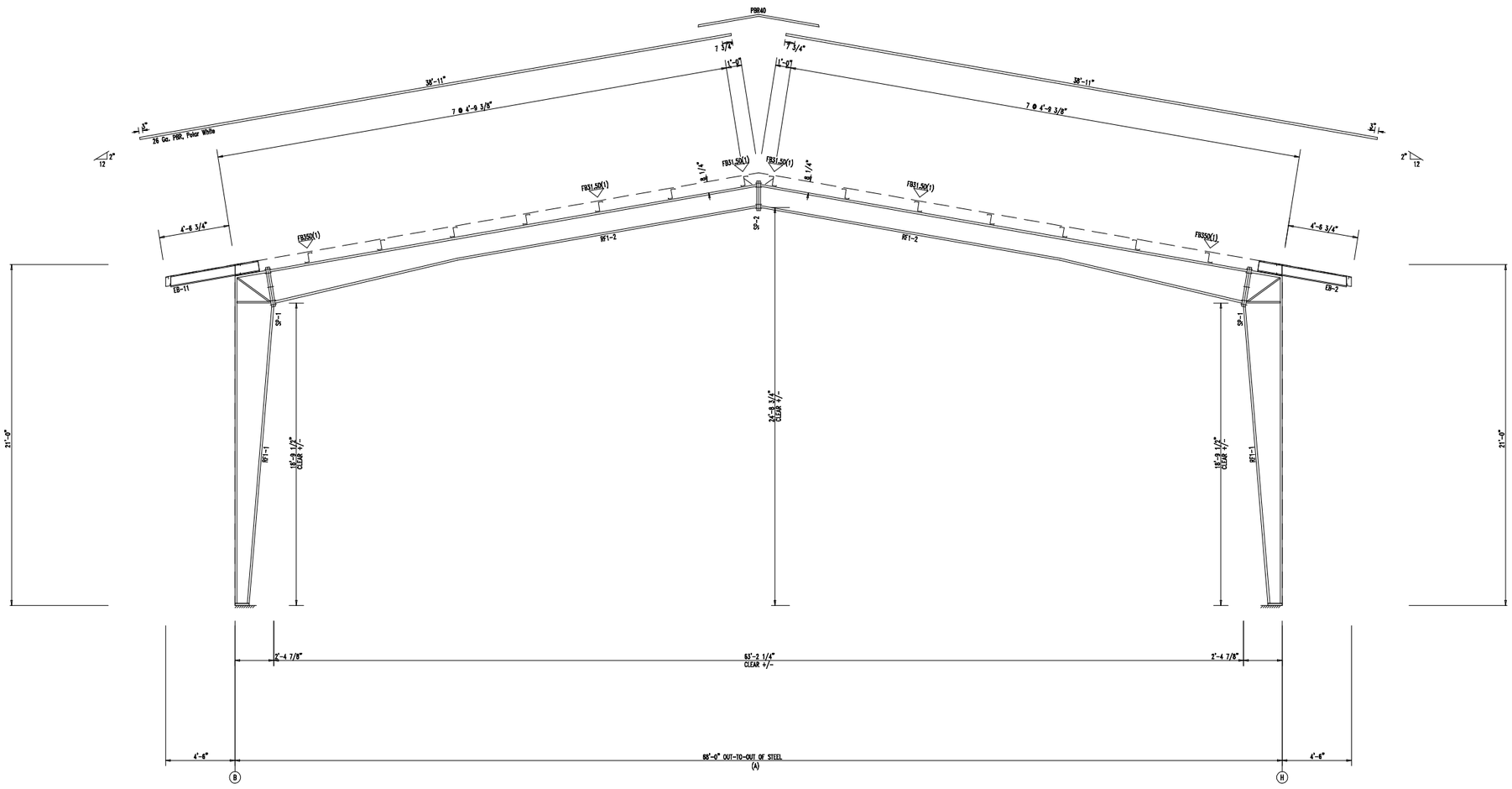

RIGID FRAME ELEVATION: FRAME LINE 1

BUILD IT WITH STEEL
BUILD IT TO LAST
JNL
STEEL COMPONENTS, INC.
432-758-9900
430 US HWY 180 W
SEMINOLE,TX 79360

CUSTOMER INFO

PROJECT
PB50554
SHARP OILFIELD SERVICES
ODESSA TEXAS 79763

SHEET NAME/TITLE
RIGID FRAME ELEVATION

DRAWN BY	DATE
BN	5/23/23
CHECKED BY	DATE
BN	5/23/23
APPROVED BY	DATE
.	5/23/23

SHEET NO.	REV.	SCALE
E12 of 55	--	NTS

REVISIONS			
NO.	NOTES	BY	DATE
--	--	--	00-00-00

SPLICE BOLT TABLE						
Mark	Qty Top	Bot	Int	Type	Dia	Length
SP-1	4	4	2	A325	0.750	2.50
SP-2	4	4	0	A325	0.750	2.50

SUPPORT BEAM BOLT TABLE				
☐ ID	Qty	Type	Dia	Length
S1	3	A325	0.750	2.50

▽ FLANGE BRACES: Both Sides(U.N.)
FBxxD(1): xx=length(in)
D - FB2X2X07

MEMBER TABLE					
Mark	Web Depth Start/End	Web Plate Thick	Web Plate Length	Outside Flange W x Thk x Length	Inside Flange W x Thk x Length
RF2-1	12.0/12.0	0.135	244.8	6 x 1/4" x 115.5 6 x 3/8" x 127.3 6 x 3/8" x 12.5	6 x 3/8" x 115.5 6 x 1/2" x 100.9
RF2-2	24.0/14.0 14.0/14.0	0.135 0.135	163.6 240.0	6 x 1/4" x 299.0 6 x 1/4" x 100.5	6 x 1/4" x 163.9 6 x 1/4" x 237.6
RF2-3	12.0/12.0	0.135	244.8	6 x 3/8" x 12.5 6 x 3/8" x 115.3 6 x 1/4" x 127.5	6 x 1/2" x 88.9 6 x 3/8" x 127.5
EB-3	W8X13				
EB-10	W8X13				

BEAM TABLE		
Mark	Part	Length
MB-1	W1466020	22'-8 1/8"
MB-2	W1464020	20'-2 3/4"
MB-3	W1466020	22'-8 1/8"

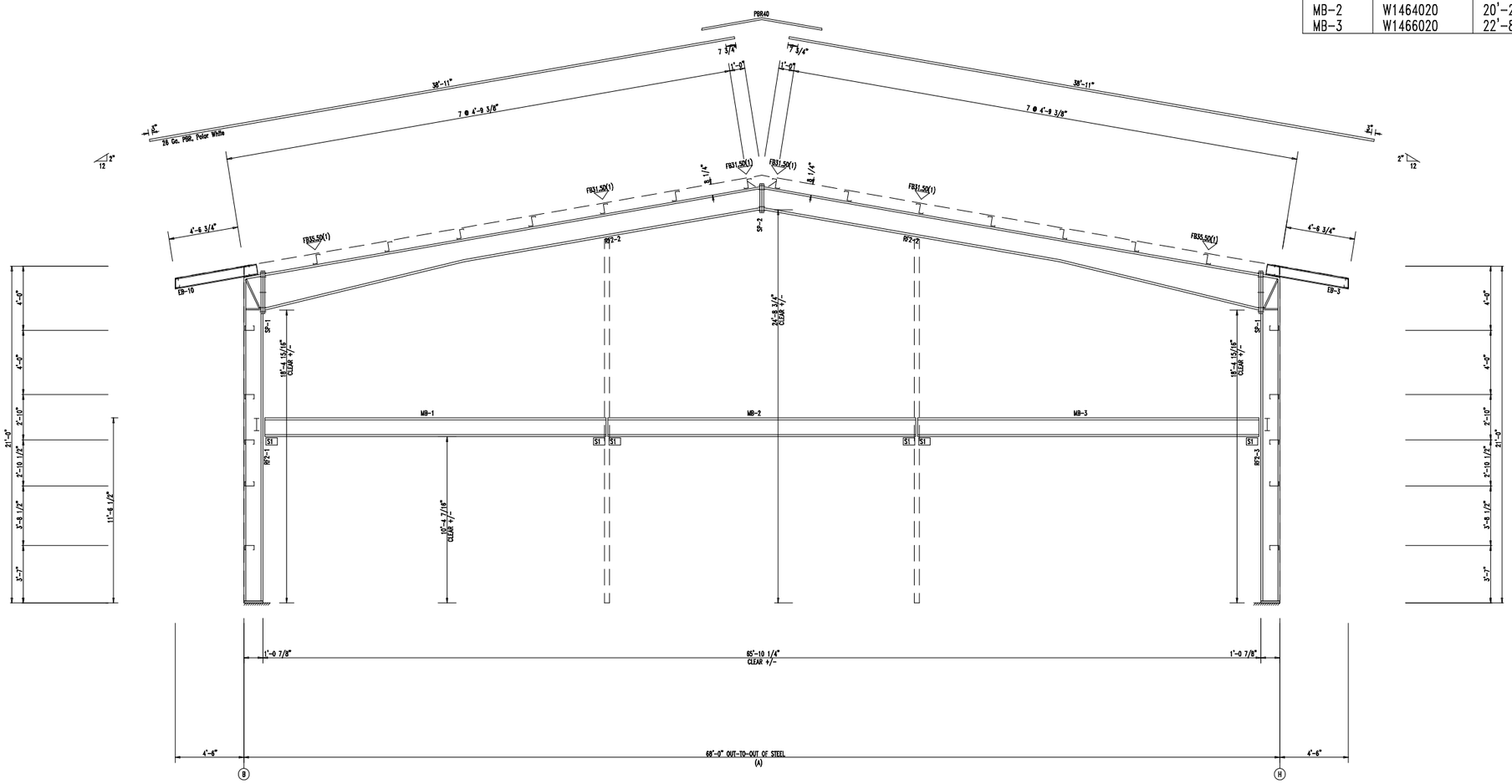

RIGID FRAME ELEVATION: FRAME LINE 2

BUILD IT WITH STEEL — BUILD IT TO LAST

JNL STEEL COMPONENTS, INC.

432-758-9900
430 US HWY 180 W
SEMINOLE, TX 79360

CUSTOMER INFO

PROJECT
PB50554
SHARP OILFIELD SERVICES
ODESSA TEXAS 79763

SHEET NAME/TITLE
RIGID FRAME ELEVATION

DRAWN BY	DATE
BN	5/23/23
CHECKED BY	DATE
BN	5/23/23
APPROVED BY	DATE
	5/23/23

SHEET NO. E13 of 55 REV. -- SCALE NTS

REVISIONS			
NO.	NOTES	BY	DATE
--	--	--	00-00-00

SPLICE BOLT TABLE						
Mark	Qty Top	Bot	Int	Type	Dia	Length
SP-1	4	4	2	A325	0.750	2.50
SP-2	4	4	0	A325	0.750	2.50

SUPPORT BEAM BOLT TABLE				
☐ ID	Qty	Type	Dia	Length
S1	3	A325	0.750	2.50
S2	6	A325	0.750	2.50
S3	4	A325	0.750	2.50

SUPPORT COLUMN BOLT TABLE				
☐ ID	Qty	Type	Dia	Length
C1	4	A325	0.750	2.50

MEMBER TABLE					
Mark	Web Depth Start/End	Web Plate Thick	Web Plate Length	Outside Flange W x Thk x Length	Inside Flange W x Thk x Length
RF3-1	12.0/12.0	0.135	244.9	6 x 1/4" x 242.9 6 x 1/4" x 12.4	6 x 1/4" x 115.5 6 x 3/8" x 107.1
RF3-2	18.0/14.0 14.0/14.0	0.135 0.135	162.7 240.0	6 x 1/4" x 299.0 6 x 1/4" x 100.6	6 x 1/4" x 162.7 6 x 1/4" x 237.6
RF3-3	12.0/12.0	0.135	244.9	6 x 1/4" x 12.4 6 x 1/4" x 242.9	6 x 3/8" x 95.1 6 x 1/4" x 127.5
EB-4	W8X10				
EB-9	W8X10				

BEAM TABLE		
Mark	Part	Length
MC-1	T035035D	10'-4 1/2"
MC-2	T035035D	10'-4 1/2"
MB-4	W1464025	36'-2"
MB-5	W1464025	29'-8"

FLANGE BRACES: Both Sides(U.N.)
FBxxD(1): xx=length(in)
D - FB2X2X07

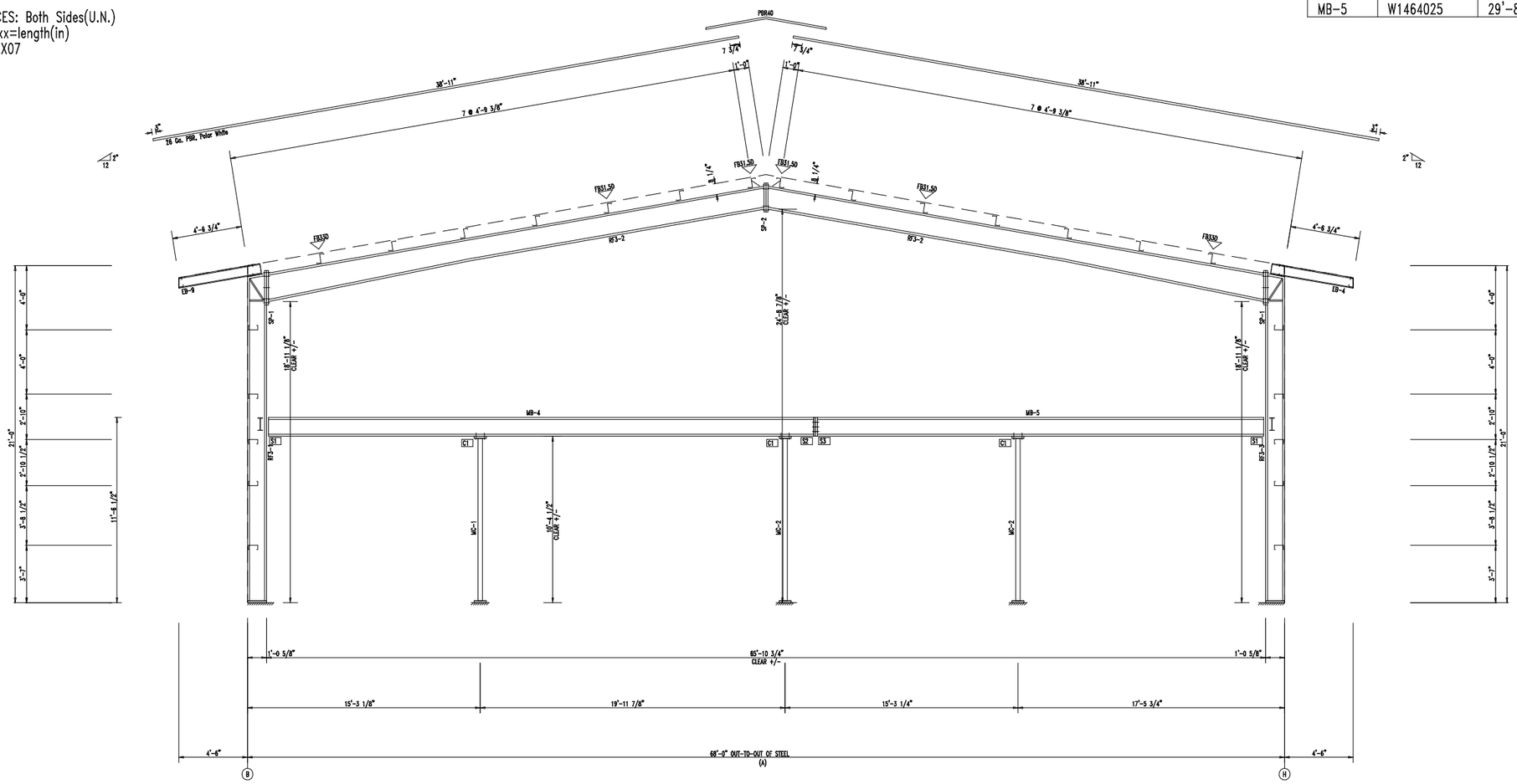

RIGID FRAME ELEVATION: FRAME LINE 3

BUILD IT WITH STEEL
BUILD IT TO LAST
JNL
STEEL COMPONENTS, INC.
432-758-9900
430 US HWY 180 W
SEMINOLE,TX 79360

CUSTOMER INFO

PROJECT
PB50554
SHARP OILFIELD SERVICES
ODESSA TEXAS 79763

SHEET NAME/TITLE
RIGID FRAME ELEVATION

DRAWN BY	DATE
BN	5/23/23
CHECKED BY	DATE
BN	5/23/23
APPROVED BY	DATE
.	5/23/23

SHEET NO.	REV.	SCALE
E14 of 55	--	NTS

REVISIONS			
NO.	NOTES	BY	DATE
--	--	--	00-00-00

SPLICE BOLT TABLE						
Mark	Qty Top	Bot	Int	Type	Dia	Length
SP-1	4	4	0	A325	0.750	2.50
SP-2	4	4	2	A325	0.750	2.50

SUPPORT BEAM BOLT TABLE				
☐ ID	Qty	Type	Dia	Length
S1	3	A325	0.750	2.50
S2	6	A325	0.750	2.50
S3	4	A325	0.750	2.50

SUPPORT COLUMN BOLT TABLE				
☐ ID	Qty	Type	Dia	Length
C1	4	A325	0.750	2.50

▽ FLANGE BRACES: Both Sides(U.N.)
FBxxD(1): xx=length(in)
D - FB2X2X07

MEMBER TABLE					
Mark	Web Depth Start/End	Web Plate Thick	Web Plate Length	Outside Flange W x Thk x Length	Inside Flange W x Thk x Length
RF4-1	14.0/14.0	0.135	245.3	6 x 1/4" x 242.9 6 x 1/4" x 14.4	6 x 1/4" x 115.5 6 x 3/8" x 111.5
RF4-2	14.0/14.0 14.0/14.0	0.135 0.135	298.0 101.7	6 x 1/4" x 292.6 6 x 1/4" x 104.7	6 x 3/8" x 163.7 6 x 1/4" x 233.6
RF4-3	14.0/14.0	0.135	245.3	6 x 1/4" x 14.4 6 x 1/4" x 242.9	6 x 3/8" x 99.5 6 x 1/4" x 127.5
EB-5 EB-8	W8X10 W8X10				
RF1-100	8.0/20.0	0.135	281.6	6 x 1/4" x 278.9 6 x 1/4" x 16.5	6 x 1/4" x 258.1
RF1-101	20.0/16.0 16.0/16.0	0.135 0.135	228.6 240.0	6 x 1/4" x 299.0 6 x 1/4" x 169.6	6 x 1/4" x 228.6 6 x 1/4" x 237.3
RF1-102	16.0/16.0 16.0/20.0	0.135 0.135	240.0 228.6	6 x 1/4" x 169.6 6 x 1/4" x 299.0	6 x 1/4" x 237.3 6 x 1/4" x 228.6
RF1-103	20.0/ 8.0	0.135	281.6	6 x 1/4" x 16.5 6 x 1/4" x 278.9	6 x 1/4" x 258.1

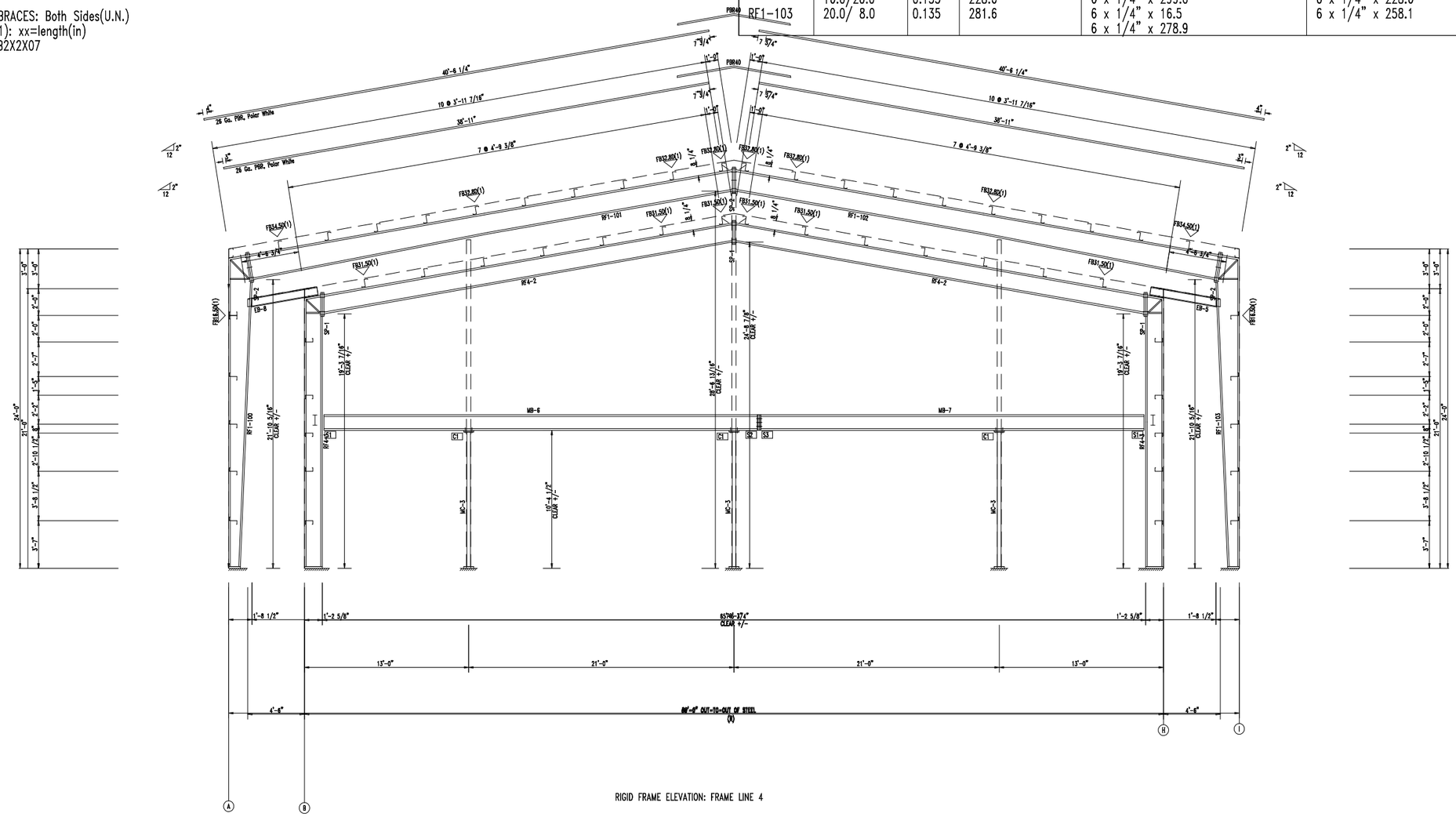

RIGID FRAME ELEVATION: FRAME LINE 4

BUILD IT WITH STEEL
BUILD IT TO LAST
JNL
STEEL COMPONENTS, INC.

432-758-9900
430 US HWY 180 W
SEMINOLE,TX 79360

CUSTOMER INFO

PROJECT
PB50554
SHARP OILFIELD SERVICES
ODESSA TEXAS 79763

SHEET NAME/TITLE
RIGID FRAME ELEVATION

DRAWN BY	DATE
BN	5/23/23
CHECKED BY	DATE
BN	5/23/23
APPROVED BY	DATE
.	5/23/23

SHEET NO.	REV.	SCALE
E15 of 55	-	NTS

REVISIONS			
NO.	NOTES	BY	DATE
--	--	--	00-00-00

SPLICE BOLT TABLE							CAP PLATE BOLTS				
Mark	Qty Top	Bot	Int	Type	Dia	Length	Mark	Qty	Type	Dia	Length
SP-1	4	4	2	A325	0.750	2.50	RF2-104	8	A325	0.750	2.50
SP-2	4	4	0	A325	0.750	2.50					

MEMBER TABLE					
Mark	Web Depth Start/End	Web Plate Thick	Web Plate Length	Outside Flange W x Thk x Length	Inside Flange W x Thk x Length
RF2-100	20.0/20.0	0.135	282.3	8 x 1/4" x 278.9 8 x 1/4" x 20.5	8 x 1/4" x 250.8
RF2-101	27.0/17.4 17.4/14.0	0.135 0.135	299.0 103.5	6 x 1/4" x 290.5 6 x 1/4" x 107.5	6 x 1/4" x 295.0 6 x 1/4" x 107.7
RF2-102	14.1/24.8	0.135	130.3	6 x 1/4" x 66.0 6 x 1/4" x 66.0	6 x 1/4" x 52.9 6 x 1/4" x 52.9
RF2-103	20.0/20.0	0.135	282.3	8 x 1/4" x 20.5 8 x 1/4" x 278.9	8 x 1/4" x 250.8
RF2-104	W1286030				
Brkt1	W21X44				
Brkt2	W21X44				
Brkt3	W21X44				
Brkt4	W21X44				

FLANGE BRACES: Both Sides(U.N.)
FBxxD(1): xx=length(in)
D - FB2X2X07

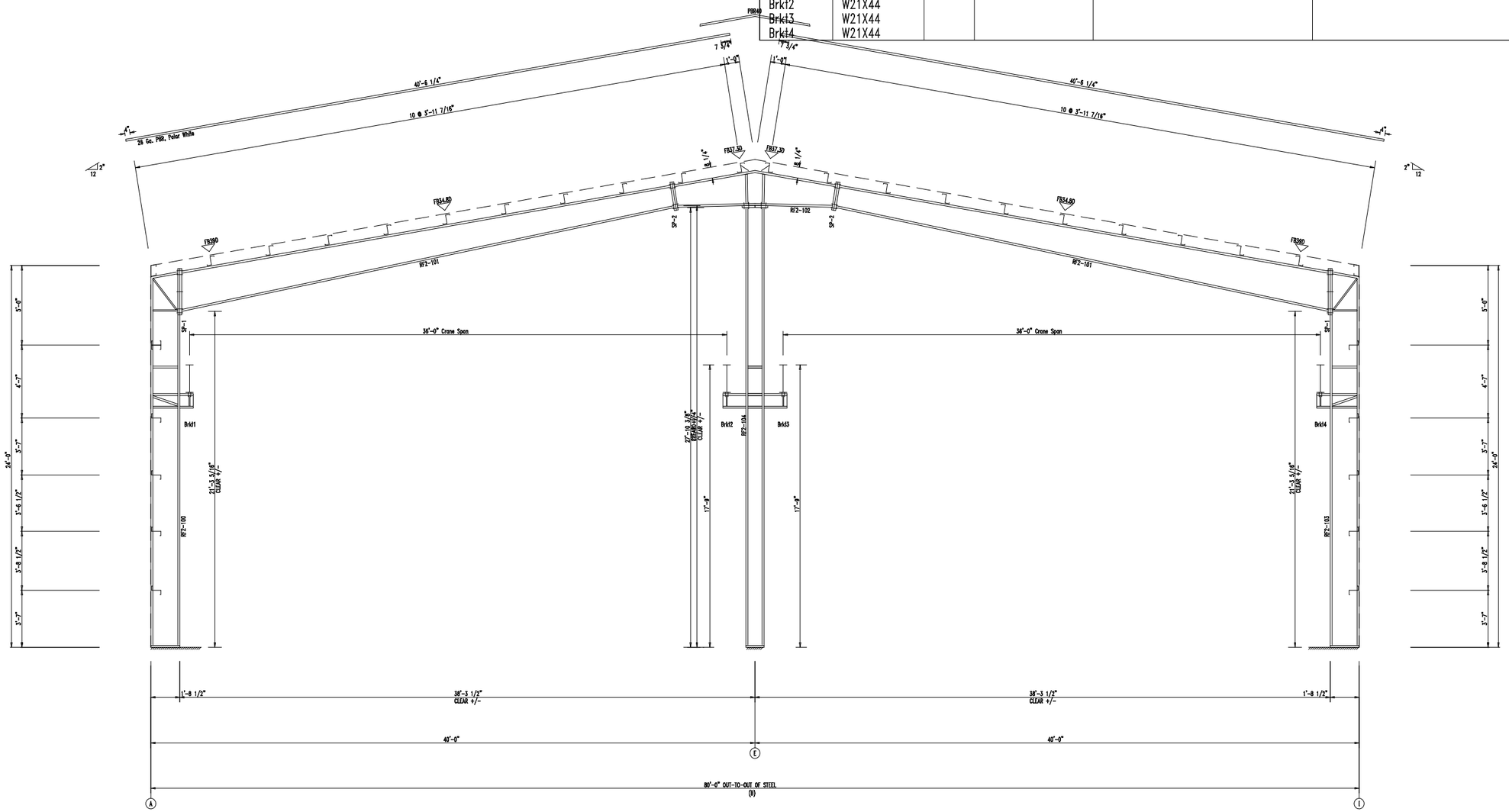

RIGID FRAME ELEVATION: FRAME LINE 5

BUILD IT WITH STEEL
BUILD IT TO LAST
JNL
STEEL COMPONENTS, INC.
432-758-9900
430 US HWY 180 W
SEMINOLE,TX 79360

CUSTOMER INFO

PROJECT
PB50554
SHARP OILFIELD SERVICES
ODESSA TEXAS 79763

SHEET NAME/TITLE
RIGID FRAME ELEVATION

DRAWN BY	DATE
BN	5/23/23
CHECKED BY	DATE
BN	5/23/23
APPROVED BY	DATE
.	5/23/23

SHEET NO.	REV.	SCALE
E16 of 55	-	NTS

REVISIONS

NO.	NOTES	BY	DATE
--	--	--	00-00-00

SPLICE BOLT TABLE							CAP PLATE BOLTS				
Mark	Qty Top	Bot	Int	Type	Dia	Length	Mark	Qty	Type	Dia	Length
SP-1	4	4	2	A325	0.750	2.50	RF3-104	8	A325	0.750	2.50
SP-2	4	4	0	A325	0.750	2.50					

MEMBER TABLE					
Mark	Web Depth Start/End	Web Plate Thick	Web Plate Length	Outside Flange W x Thk x Length	Inside Flange W x Thk x Length
RF3-100	20.0/20.0	0.135	282.3	8 x 1/4" x 278.9 8 x 1/4" x 20.5	8 x 1/4" x 250.8
RF3-101	27.0/17.4 17.4/14.0	0.135 0.135	299.0 103.5	6 x 1/4" x 290.5 6 x 1/4" x 107.5	6 x 1/4" x 295.0 6 x 1/4" x 107.7
RF3-102	14.1/24.8	0.135	130.3	6 x 1/4" x 66.0 6 x 1/4" x 66.0	6 x 1/4" x 52.9 6 x 1/4" x 52.9
RF3-103	20.0/20.0	0.135	282.3	8 x 1/4" x 20.5 8 x 1/4" x 278.9	8 x 1/4" x 250.8
RF3-104	W1286030				
Brkt1	W21X44				
Brkt2	W21X44				
Brkt3	W21X44				
Brkt4	W21X44				

FLANGE BRACES: Both Sides(U.N.)
FBxxD(1): xx=length(in)
D - FB2X2X07

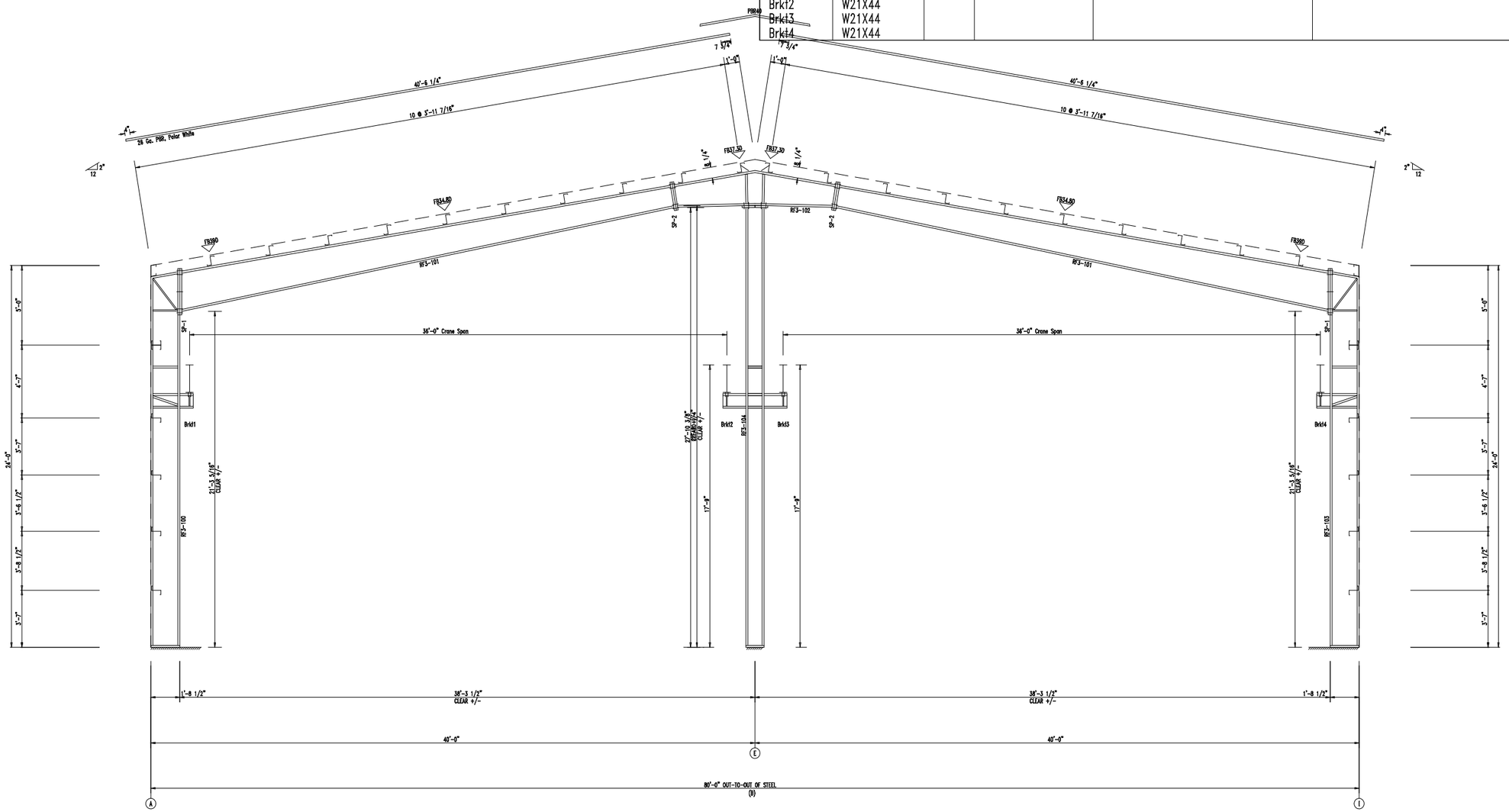

RIGID FRAME ELEVATION: FRAME LINE 6

BUILD IT WITH STEEL
BUILD IT TO LAST
JNL
STEEL COMPONENTS, INC.
432-758-9900
430 US HWY 180 W
SEMINOLE,TX 79360

CUSTOMER INFO

PROJECT
PB50554
SHARP OILFIELD SERVICES
ODESSA TEXAS 79763

SHEET NAME/TITLE
RIGID FRAME ELEVATION

DRAWN BY	DATE
BN	5/23/23
CHECKED BY	DATE
BN	5/23/23
APPROVED BY	DATE
.	5/23/23

SHEET NO.	REV.	SCALE
E17 of 55	-	NTS

REVISIONS

NO.	NOTES	BY	DATE
--	--	--	00-00-00

SPLICE BOLT TABLE							CAP PLATE BOLTS				
Mark	Qty Top	Bot	Int	Type	Dia	Length	Mark	Qty	Type	Dia	Length
SP-1	4	4	2	A325	0.750	2.50	RF4-103	8	A325	0.750	2.50
SP-2	4	4	0	A325	0.750	2.50					

FLANGE BRACES: Both Sides(U.N.)
FBxxD(1): xx=length(in)
D - FB2X2X07

MEMBER TABLE					
Mark	Web Depth Start/End	Web Plate Thick	Web Plate Length	Outside Flange W x Thk x Length	Inside Flange W x Thk x Length
RF4-100	20.0/20.0	0.135	282.3	8 x 1/4" x 278.9	8 x 1/4" x 250.8
				8 x 1/4" x 20.5	
RF4-101	27.0/17.4	0.135	299.0	6 x 1/4" x 290.5	6 x 1/4" x 295.0
	17.4/14.0	0.135	103.5	6 x 1/4" x 107.5	6 x 1/4" x 107.7
RF4-102	14.1/24.8	0.135	130.3	6 x 1/4" x 66.0	6 x 1/4" x 52.9
				6 x 1/4" x 66.0	6 x 1/4" x 52.9
RF4-103	W1286030				
Brkt1	W21X44				
Brkt2	W21X44				
Brkt3	W21X44				
Brkt4	W21X44				

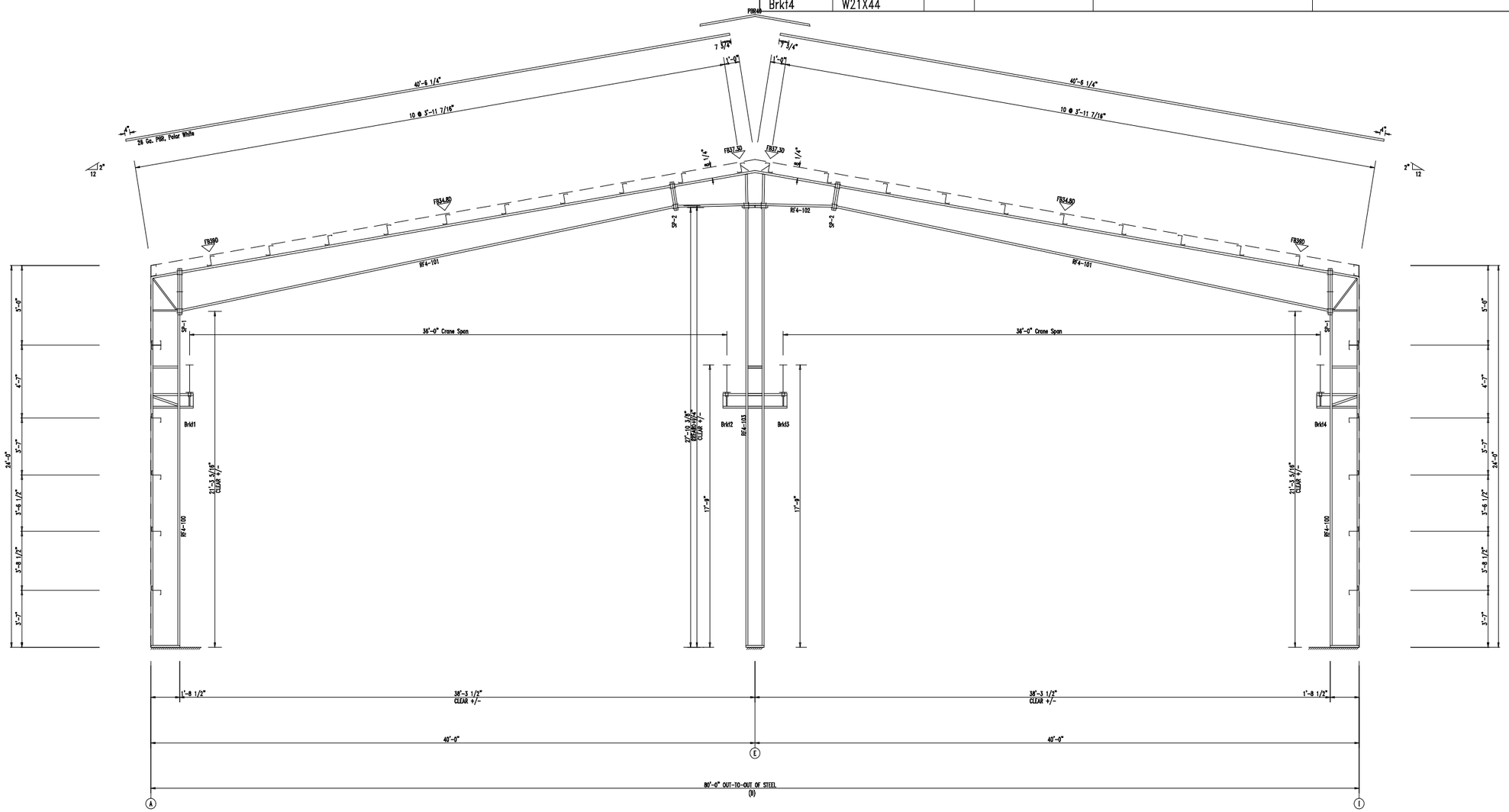

RIGID FRAME ELEVATION: FRAME LINE 7

BUILD IT WITH STEEL
BUILD IT TO LAST
JNL
STEEL COMPONENTS, INC.
432-758-9900
430 US HWY 180 W
SEMINOLE,TX 79360

CUSTOMER INFO

PROJECT
PB50554
SHARP OILFIELD SERVICES
ODESSA TEXAS 79763

SHEET NAME/TITLE
RIGID FRAME ELEVATION

DRAWN BY	DATE
BN	5/23/23
CHECKED BY	DATE
BN	5/23/23
APPROVED BY	DATE
.	5/23/23

SHEET NO.	REV.	SCALE
E18 of 55	-	NTS

REVISIONS

NO.	NOTES	BY	DATE
--	--	--	00-00-00

SPLICE BOLT TABLE							CAP PLATE BOLTS				
Mark	Qty Top	Bot	Int	Type	Dia	Length	Mark	Qty	Type	Dia	Length
SP-1	4	4	2	A325	0.750	2.50	RF5-103	8	A325	0.750	2.50
SP-2	4	4	0	A325	0.750	2.50					

FLANGE BRACES: Both Sides(U.N.)
FBxxD(1): xx=length(in)
D - FB2X2X07

MEMBER TABLE					
Mark	Web Depth Start/End	Web Plate Thick	Web Plate Length	Outside Flange W x Thk x Length	Inside Flange W x Thk x Length
RF5-100	20.0/20.0	0.135	282.3	8 x 1/4" x 278.9	8 x 1/4" x 251.8
				8 x 1/4" x 20.5	
RF5-101	26.0/17.1	0.135	299.0	6 x 1/4" x 290.6	6 x 1/4" x 295.0
	17.1/14.0	0.135	103.4	6 x 1/4" x 107.4	6 x 1/4" x 107.5
RF5-102	14.1/24.8	0.135	130.3	6 x 1/4" x 66.0	6 x 1/4" x 52.9
				6 x 1/4" x 66.0	6 x 1/4" x 52.9
RF5-103	W1286030				
Brkt1	W21X44				
Brkt2	W21X44				
Brkt3	W21X44				
Brkt4	W21X44				

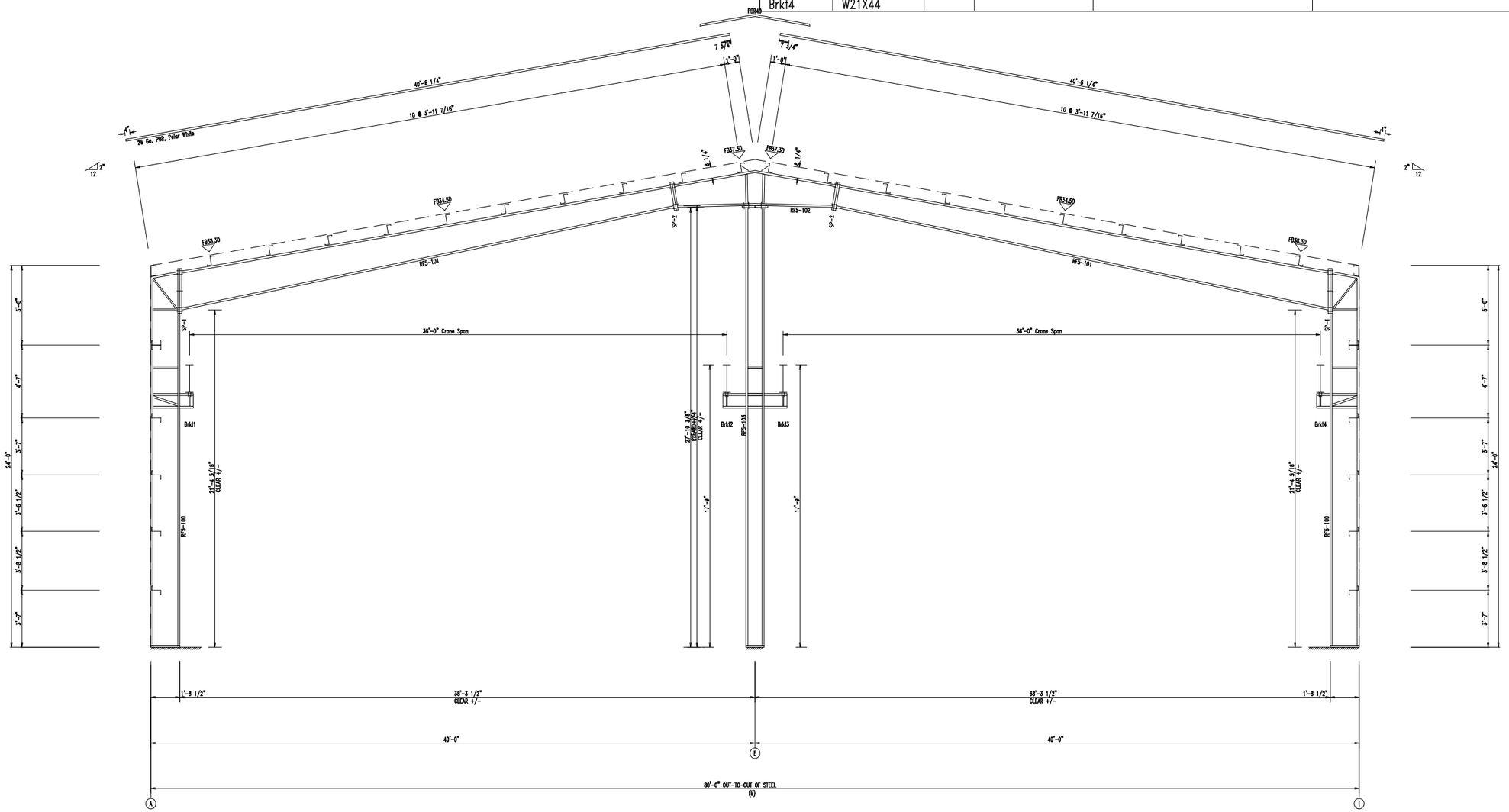

RIGID FRAME ELEVATION: FRAME LINE 8

BUILD IT WITH STEEL
BUILD IT TO LAST
JNL
STEEL COMPONENTS, INC.
432-758-9900
430 US HWY 180 W
SEMINOLE,TX 79360

CUSTOMER INFO

PROJECT
PB50554
SHARP OILFIELD SERVICES
ODESSA TEXAS 79763

SHEET NAME/TITLE
RIGID FRAME ELEVATION

DRAWN BY	DATE
BN	5/23/23
CHECKED BY	DATE
BN	5/23/23
APPROVED BY	DATE
.	5/23/23

SHEET NO.	REV.	SCALE
E19 of 55	-	NTS

REVISIONS

NO.	NOTES	BY	DATE
--	--	--	00-00-00

SPLICE BOLT TABLE							CAP PLATE BOLTS				
Mark	Qty Top	Bot	Int	Type	Dia	Length	Mark	Qty	Type	Dia	Length
SP-1	4	4	2	A325	0.750	2.50	RF6-104	8	A325	0.750	2.50
SP-2	4	4	0	A325	0.750	2.50					

FLANGE BRACES: Both Sides(U.N.)
FBxxD(1): xx=length(in)
D - FB2X2X07

MEMBER TABLE					
Mark	Web Depth Start/End	Web Plate Thick	Web Plate Length	Outside Flange W x Thk x Length	Inside Flange W x Thk x Length
RF6-100	20.0/20.0	0.135	282.3	8 x 1/4" x 278.9 8 x 1/4" x 20.5	8 x 1/4" x 251.8
RF6-101	26.0/17.1 17.1/14.0	0.135 0.135	299.0 103.4	6 x 1/4" x 290.6 6 x 1/4" x 107.4	6 x 1/4" x 295.0 6 x 1/4" x 107.5
RF6-102	14.1/24.8	0.135	130.3	6 x 1/4" x 66.0 6 x 1/4" x 66.0	6 x 1/4" x 52.9 6 x 1/4" x 52.9
RF6-103	20.0/20.0	0.135	282.3	8 x 1/4" x 20.5 8 x 1/4" x 278.9	8 x 1/4" x 251.8
RF6-104	W1286030				
Brkt1	W21X44				
Brkt2	W21X44				
Brkt3	W21X44				
Brkt4	W21X44				

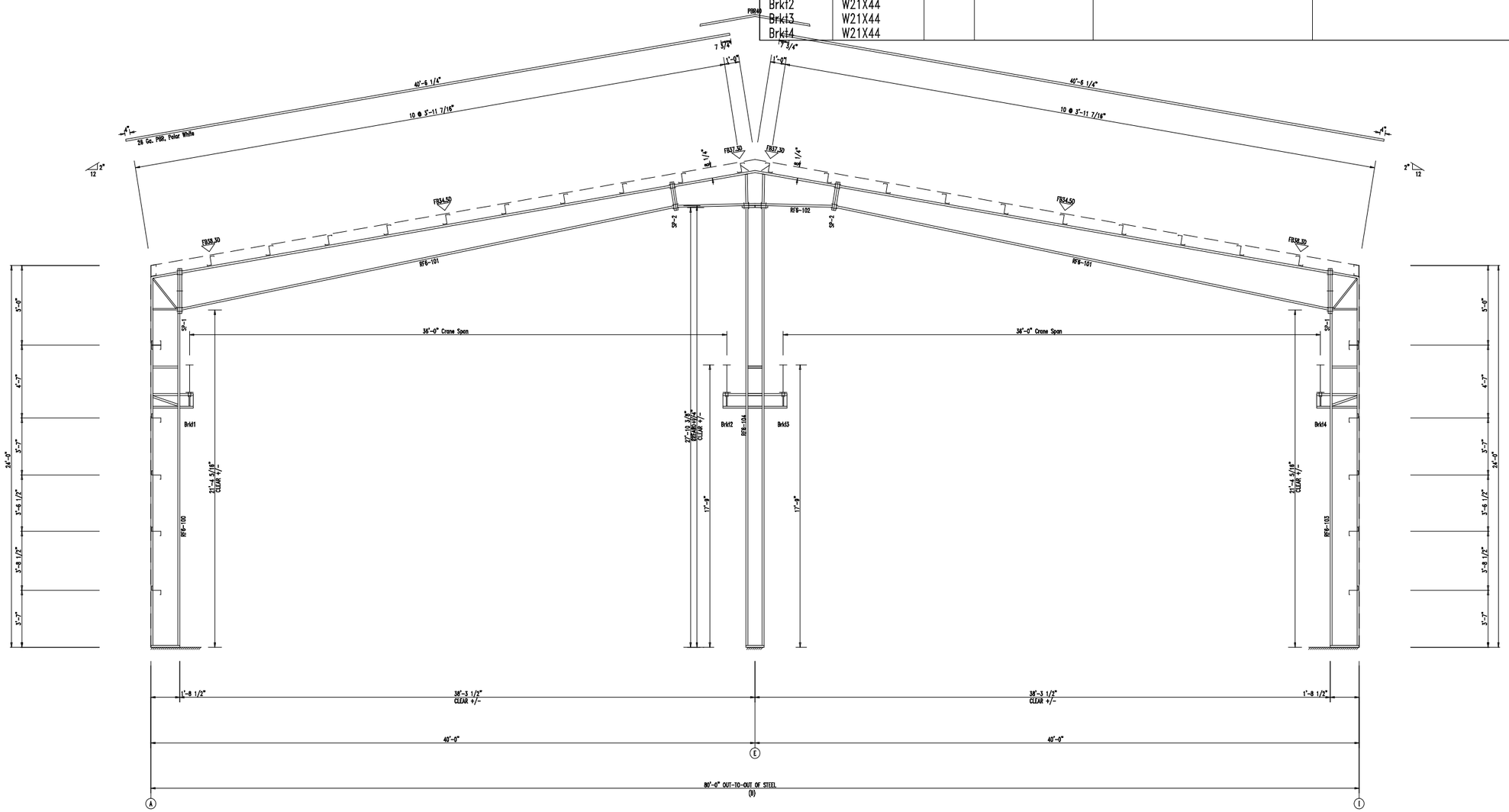

RIGID FRAME ELEVATION: FRAME LINE 9

BUILD IT WITH STEEL
BUILD IT TO LAST
JNL
STEEL COMPONENTS, INC.
432-758-9900
430 US HWY 180 W
SEMINOLE,TX 79360

CUSTOMER INFO

PROJECT
PB50554
SHARP OILFIELD SERVICES
ODESSA TEXAS 79763

SHEET NAME/TITLE
RIGID FRAME ELEVATION

DRAWN BY	DATE
BN	5/23/23
CHECKED BY	DATE
BN	5/23/23
APPROVED BY	DATE
.	5/23/23

SHEET NO.	REV.	SCALE
E20 of 55-		NTS

REVISIONS

NO.	NOTES	BY	DATE
--	--	--	00-00-00

SPLICE BOLT TABLE							CAP PLATE BOLTS				
Mark	Qty Top	Bot	Int	Type	Dia	Length	Mark	Qty	Type	Dia	Length
SP-1	4	4	2	A325	0.750	2.50	RF7-104	8	A325	0.750	2.50
SP-2	4	4	0	A325	0.750	2.50					

FLANGE BRACES: Both Sides(U.N.)
FBxxD(1): xx=length(in)
D - FB2X2X07

MEMBER TABLE					
Mark	Web Depth Start/End	Web Plate Thick	Web Plate Length	Outside Flange W x Thk x Length	Inside Flange W x Thk x Length
RF7-100	20.0/20.0	0.135	282.3	8 x 1/4" x 278.9 8 x 1/4" x 20.5	8 x 1/4" x 250.8
RF7-101	27.0/15.9 15.9/12.0	0.135 0.135	299.0 103.5	6 x 1/4" x 290.5 6 x 1/4" x 107.5	6 x 1/4" x 295.0 6 x 1/4" x 107.8
RF7-102	12.1/22.8	0.135	130.3	6 x 1/4" x 66.0 6 x 1/4" x 66.0	6 x 1/4" x 53.2 6 x 1/4" x 53.2
RF7-103	20.0/20.0	0.135	282.3	8 x 1/4" x 20.5 8 x 1/4" x 278.9	8 x 1/4" x 250.8
RF7-104	W1286030				
Brkt1	W21X44				
Brkt2	W21X44				
Brkt3	W21X44				
Brkt4	W21X44				

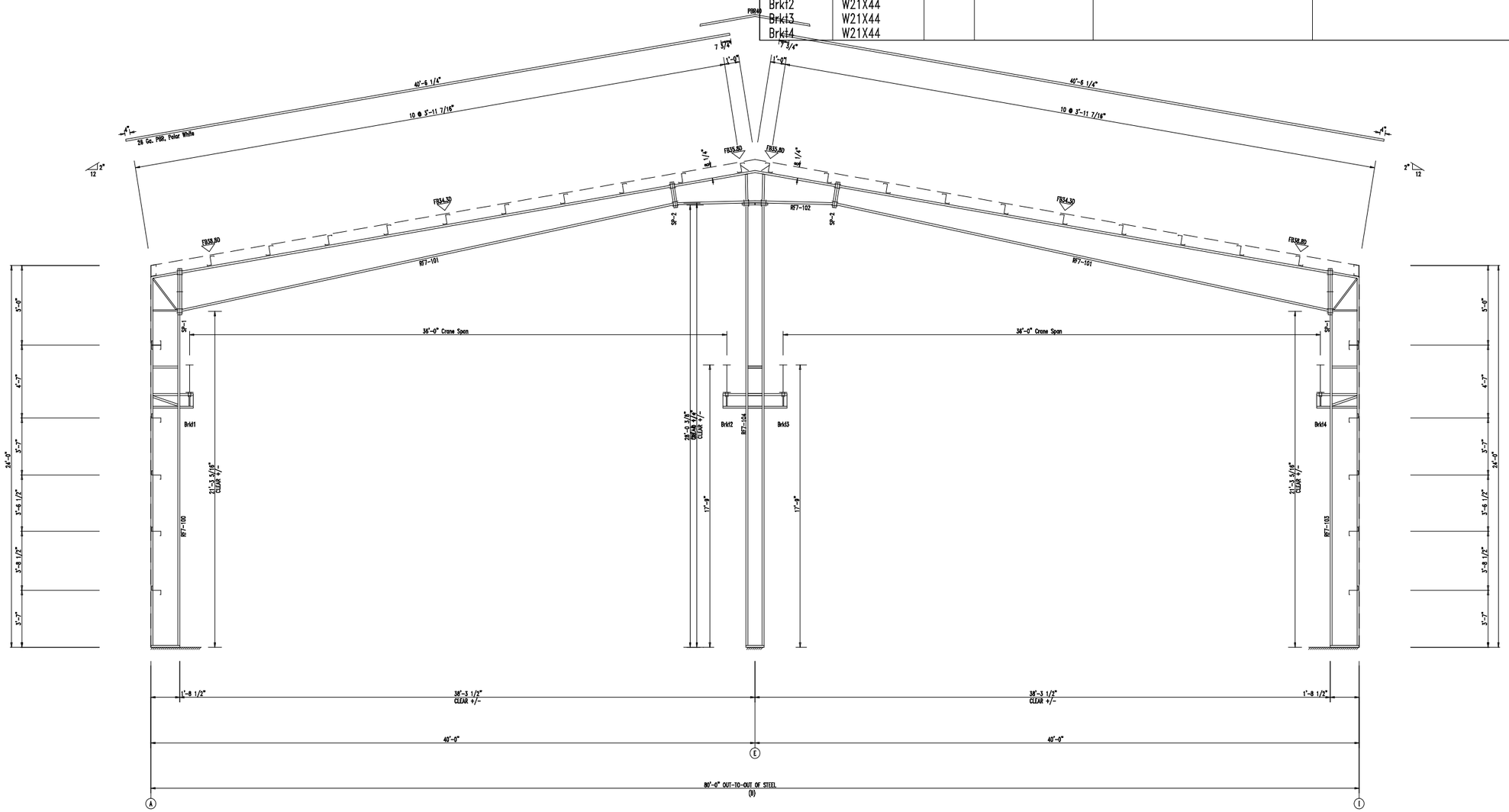

RIGID FRAME ELEVATION: FRAME LINE 10

BUILD IT WITH STEEL
BUILD IT TO LAST
JNL
STEEL COMPONENTS, INC.

432-758-9900
430 US HWY 180 W
SEMINOLE,TX 79360

CUSTOMER INFO

PROJECT
PB50554
SHARP OILFIELD SERVICES
ODESSA TEXAS 79763

SHEET NAME/TITLE
RIGID FRAME ELEVATION

DRAWN BY	DATE
BN	5/23/23
CHECKED BY	DATE
BN	5/23/23
APPROVED BY	DATE
.	5/23/23

SHEET NO.	REV.	SCALE
E21 of 55	-	NTS

REVISIONS

NO.	NOTES	BY	DATE
--	--	--	00-00-00

SPLICE BOLT TABLE						
Mark	Qty Top	Bot	Int	Type	Dia	Length
SP-1	4	4	2	A325	0.750	2.50

FLANGE BRACES: Both Sides(U.N.)
FBxxD(1): xx=length(in)
D - FB2X2X07

MEMBER TABLE					
Mark	Web Depth Start/End	Web Plate Thick	Web Plate Length	Outside Flange W x Thk x Length	Inside Flange W x Thk x Length
RF8-100	8.0/20.0	0.135	281.6	6 x 1/4" x 278.9 6 x 1/4" x 16.5	6 x 1/4" x 258.1
RF8-101	20.0/16.0 16.0/16.0	0.135 0.135	228.6 240.0	6 x 1/4" x 299.0 6 x 1/4" x 169.6	6 x 1/4" x 228.6 6 x 1/4" x 237.3
RF8-102	16.0/16.0 16.0/20.0	0.135 0.135	240.0 228.6	6 x 1/4" x 169.6 6 x 1/4" x 299.0	6 x 1/4" x 237.3 6 x 1/4" x 228.6
RF8-103	20.0/ 8.0	0.135	281.6	6 x 1/4" x 16.5 6 x 1/4" x 278.9	6 x 1/4" x 258.1

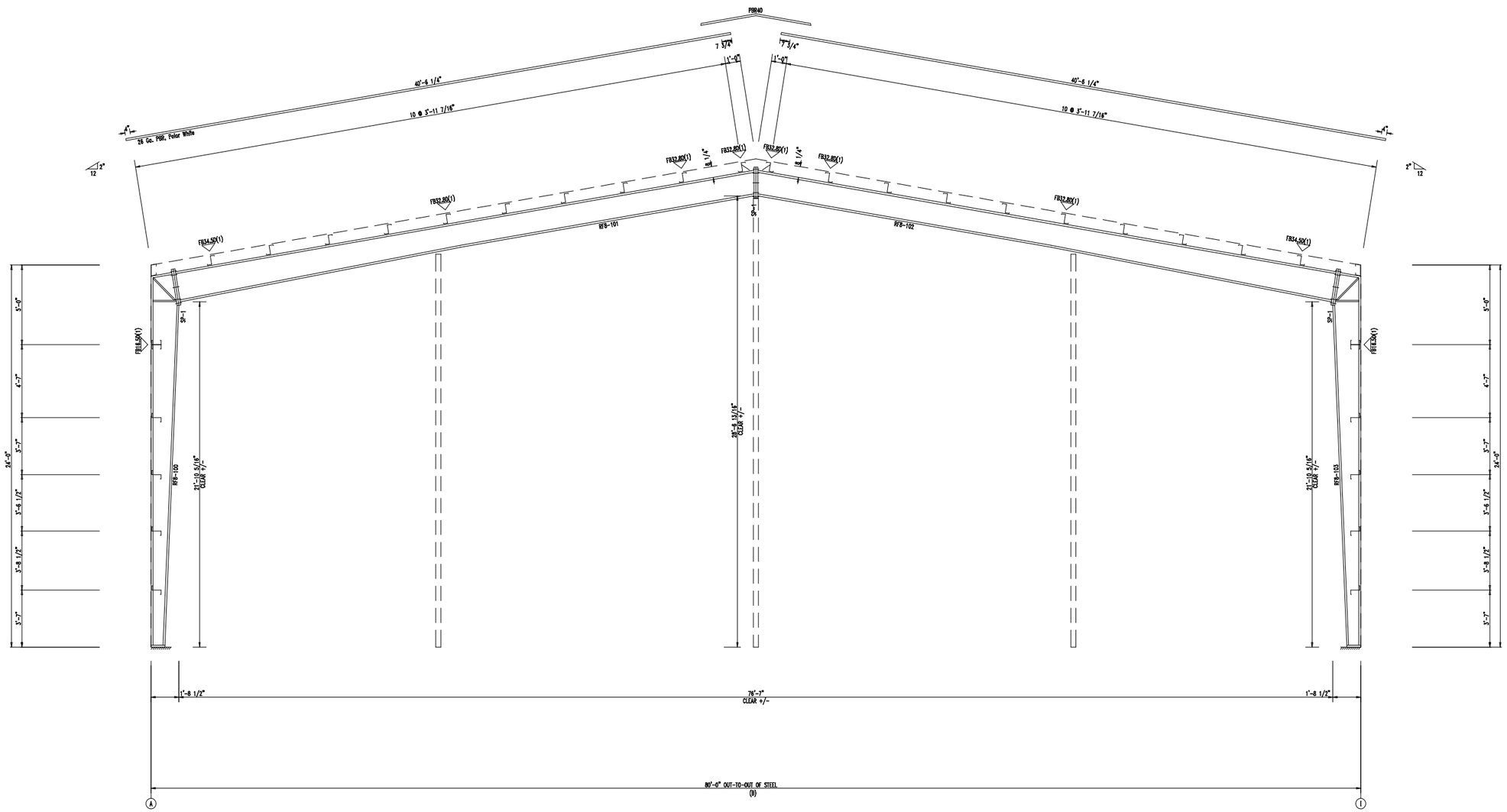

RIGID FRAME ELEVATION: FRAME LINE 11

BUILD IT WITH STEEL
BUILD IT TO LAST
JNL
STEEL COMPONENTS, INC.
432-758-9900
430 US HWY 180 W
SEMINOLE,TX 79360

CUSTOMER INFO

PROJECT
PB50554
SHARP OILFIELD SERVICES
ODESSA TEXAS 79763

SHEET NAME/TITLE
RIGID FRAME ELEVATION

DRAWN BY	DATE
BN	5/23/23
CHECKED BY	DATE
BN	5/23/23
APPROVED BY	DATE
.	5/23/23

SHEET NO.	REV.	SCALE
E22 of 55-		NTS

REVISIONS			
NO.	NOTES	BY	DATE
--	--	--	00-00-00

Partition Reactions:
Max Horz: 3 k ⟷
Max Vert: .4 k ↑

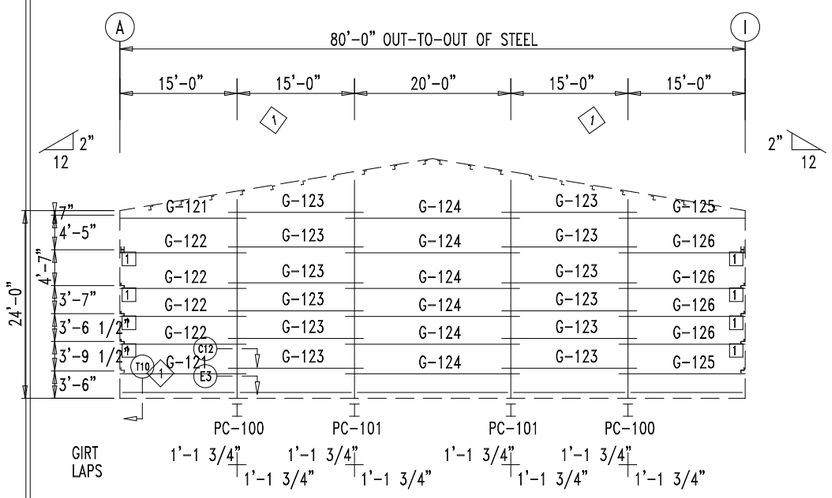

PARTITION 1 FRAMING

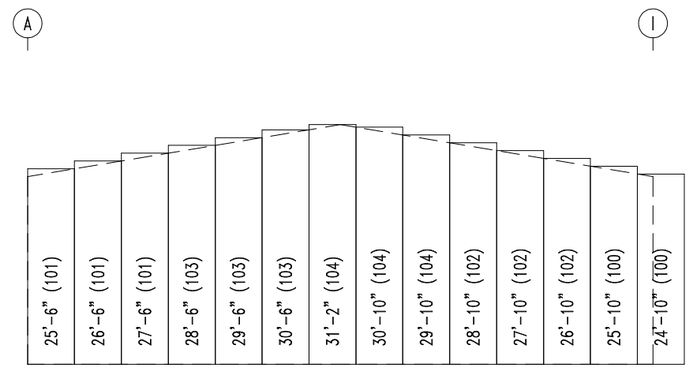

PARTITION 1 INSULATION

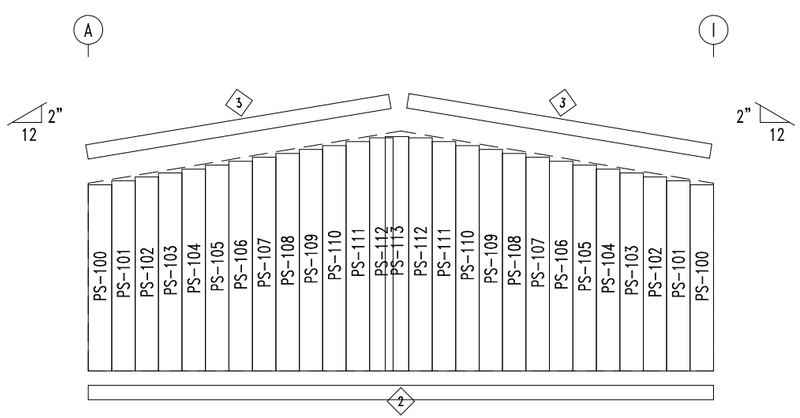

PARTITION 1 LEFT SHEETING & TRIM
PANELS: 26 Ga. PBR - Desert Sand

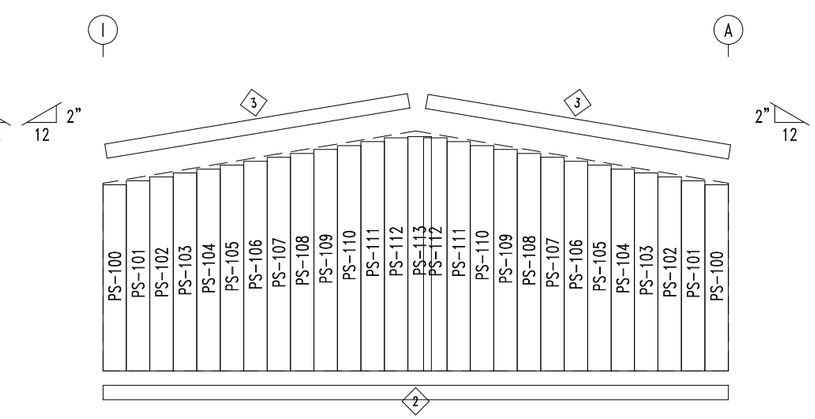

PARTITION 1 RIGHT SHEETING & TRIM
PANELS: 26 Ga. PBR - Desert Sand

MEMBER TABLE
PARTITION 1

MARK	PART	LENGTH
PC-100	W0864030	23'-9 7/8"
PC-101	W0864030	26'-10 13/16"
G-121	8X25Z14	15'-5 1/4"
G-122	8X25Z14	15'-5 1/4"
G-123	8X25Z14	17'-3 1/2"
G-124	8X25Z14	22'-3 1/2"
G-125	8X25Z14	15'-5 1/4"
G-126	8X25Z14	15'-5 1/4"

ANGLE TABLE
PARTITION 1

◇ID	PART	LENGTH
1	L4X2X14	20'-0"

TRIM TABLE
PARTITION 1

◇ID	PART	LENGTH
2	SCAN125	1'-0"
3	TRIA2	10'-2"

WALL INSULATION TABLE
PARTITION 1

ROLL	MARK	WIDTH	LENGTH
100	PI-100	6'-0"	50'-8"
101	PI-101	6'-0"	79'-6"
102	PI-102	6'-0"	83'-6"
103	PI-103	6'-0"	88'-6"
104	PI-104	6'-0"	91'-10"

PANEL TABLE
PARTITION 1

MARK	LENGTH
PS-100	23'-9 3/4"
PS-101	24'-3 3/4"
PS-102	24'-9 3/4"
PS-103	25'-3 3/4"
PS-104	25'-9 3/4"
PS-105	26'-3 3/4"
PS-106	26'-9 3/4"
PS-107	27'-3 3/4"
PS-108	27'-9 3/4"
PS-109	28'-3 3/4"
PS-110	28'-9 3/4"
PS-111	29'-3 3/4"
PS-112	29'-9 3/4"
PS-113	29'-11 3/4"

CONNECTION PLATES
PARTITION 1

□ID	MARK/PART
1	r100

BUILD IT WITH STEEL BUILD IT TO LAST
JNL STEEL COMPONENTS, INC.
432-758-9900
430 US HWY 180 W
SEMINOLE, TX 79360

CUSTOMER INFO

PROJECT
PB50554
SHARP OILFIELD SERVICES
ODESSA TEXAS 79763

SHEET NAME/TITLE
PARTITION FRAMING

DRAWN BY	DATE
BN	4/18/23
CHECKED BY	DATE
BN	4/18/23
APPROVED BY	DATE
.	4/18/23

SHEET NO.	REV.	SCALE
PN	--	NTS

REVISIONS

NO.	NOTES	BY	DATE
--	--	--	00-00-00

MEMBER TABLE		
Mark	Part	Length
RB-100	W21X44\C12x20.7	25'-2 1/4"
RB-101	W21X44\C12x20.7	25'-2 1/4"
RB-102	W21X44\C12x20.7	24'-11 1/2"
RB-103	W21X44\C12x20.7	24'-11 1/2"
RB-104	W21X44\C12x20.7	25'-2 1/4"
RB-105	W21X44\C12x20.7	25'-2 1/4"

PLATE TABLE			
Part	Web Depth x Thick	Top Flange Width x Thick	Bottom Flange Width x Thick
W21X44	19.8 x 0.350	6.5 x 0.450	6.5 x 0.450
C12x20.7	11.0 x 0.282	2.9 x 0.501	2.9 x 0.501

ANGLE TABLE	
◇ID	Part
1	L3X3X316
2	L3X3X316
3	L3X3X316
4	L3X3X316

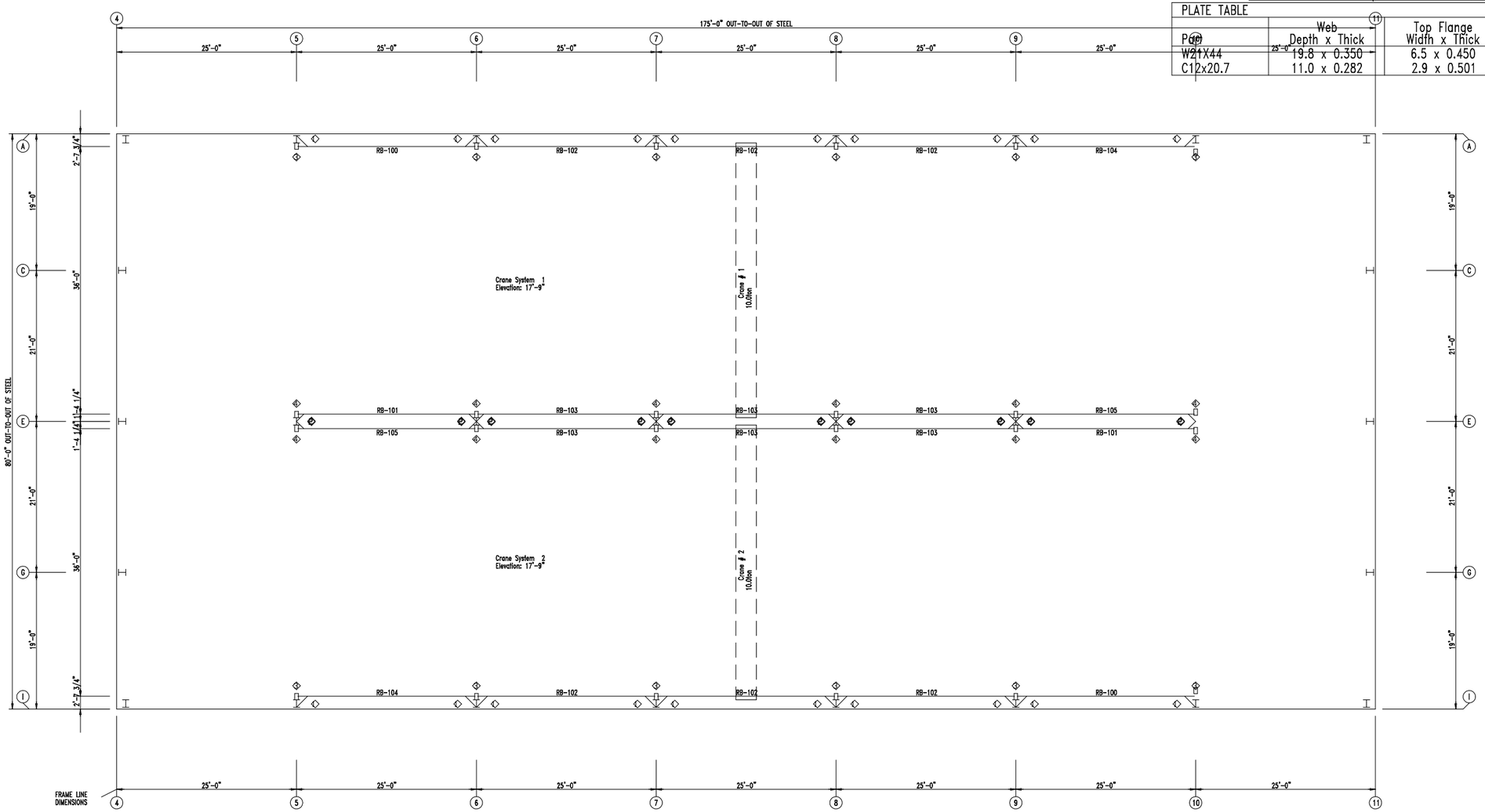

CRANE PLAN

Crane Specs For Crane System #1:			
	Crane #1	Crane #2	Crane #3
Capacity:	20 Kips	Kips	Kips
Service Class:	C		
Bridge Weight:	5.8 Kips	Kips	Kips
Trolley/Hoist Weight:	1.5 Kips	Kips	Kips
Vertical Impact:	10.0 %	%	%
Lateral Force:	20.0 %	%	%
Longitudinal Force:	10.0 %	%	%

BUILD IT WITH STEEL
BUILD IT TO LAST
JNL
STEEL COMPONENTS, INC.
432-758-9900
430 US HWY 180 W
SEMINOLE,TX 79360

CUSTOMER INFO

PROJECT
PB50554
SHARP OILFIELD SERVICES
ODESSA TEXAS 79763

SHEET NAME/TITLE
CRANE PLAN

DRAWN BY	DATE
BN	5/23/23
CHECKED BY	DATE
BN	5/23/23
APPROVED BY	DATE
	5/23/23

SHEET NO.	REV.	SCALE
E24 of 55-		NTS

REVISIONS			
NO.	NOTES	BY	DATE
--	--	--	00-00-00

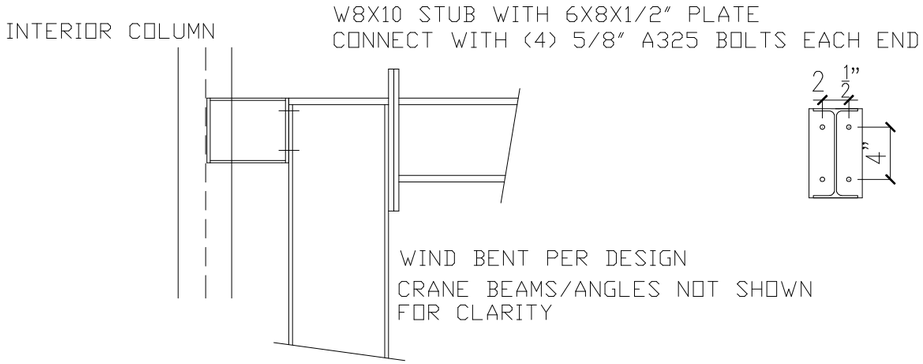

ANGLE TABLE	
◇ID	Part
1	L3X3X316
2	L3X3X316
3	L3X3X316
4	L3X3X316

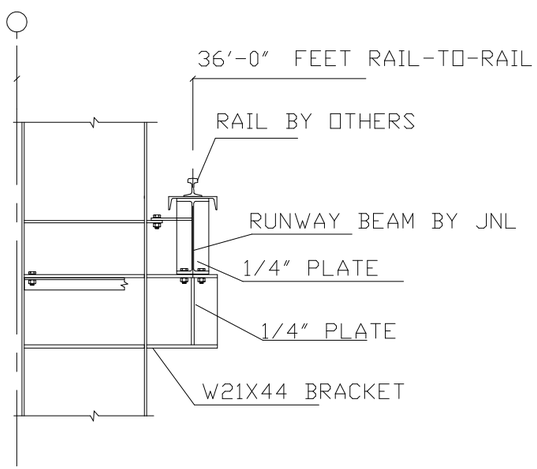

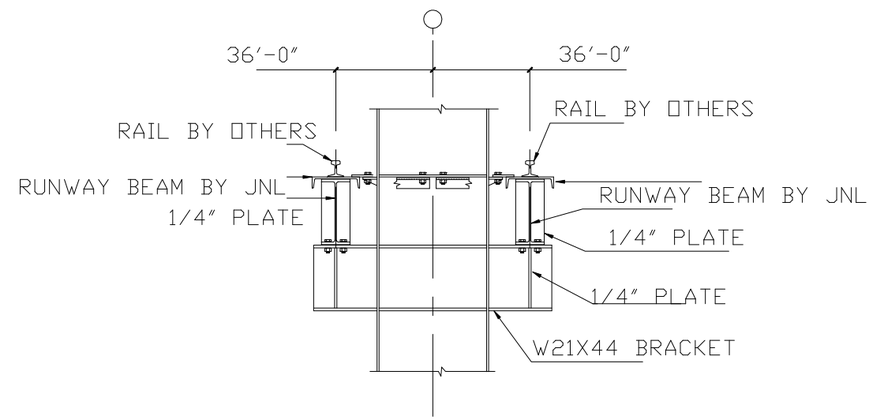

ALL BOLTS TO BE 3/4 A325 BOLTS

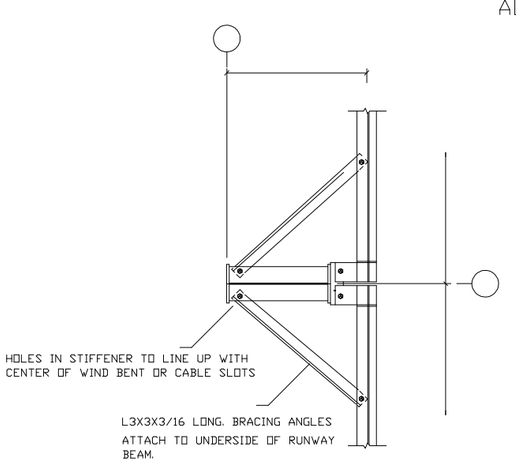

WIND BENT OFFSET 8" TO CLEAR
LONG. BRACING ANGLES.

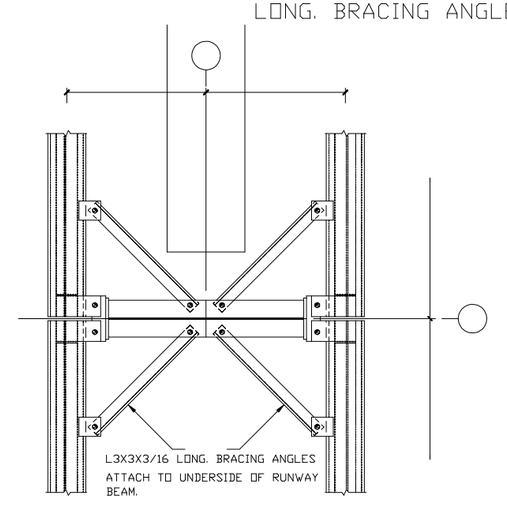

BUILD IT WITH STEEL BUILD IT TO LAST
JNL
STEEL COMPONENTS, INC.
432-758-9900
430 US HWY 180 W
SEMINOLE,TX 79360

CUSTOMER INFO

PROJECT
PB50554
SHARP OILFIELD SERVICES
ODESSA TEXAS 79763

SHEET NAME/TITLE
CRANE PLAN

DRAWN BY	DATE
BN	4/18/23
CHECKED BY	DATE
BN	4/18/23
APPROVED BY	DATE
	4/18/23

SHEET NO.	REV.	SCALE
PN	--	NTS

REVISIONS

NO.	NOTES	BY	DATE
--	--	--	00-00-00

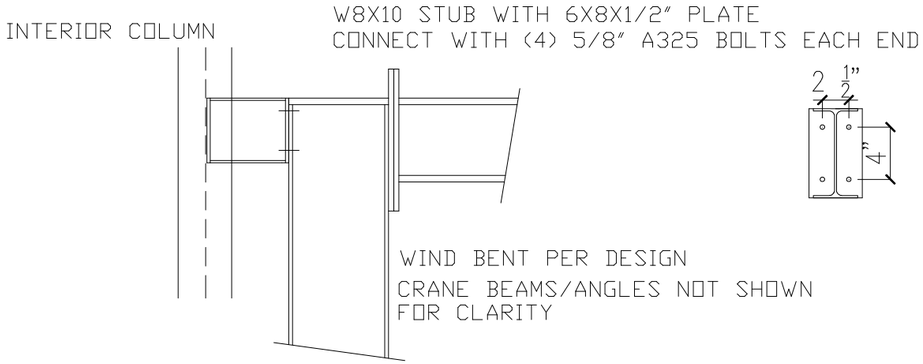

ANGLE TABLE	
◇ID	Part
1	L3X3X316
2	L3X3X316
3	L3X3X316
4	L3X3X316

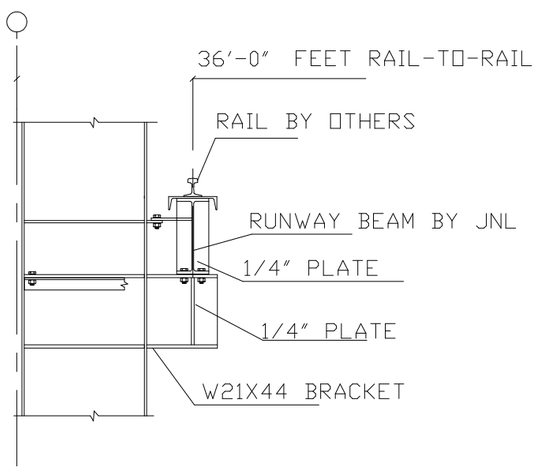

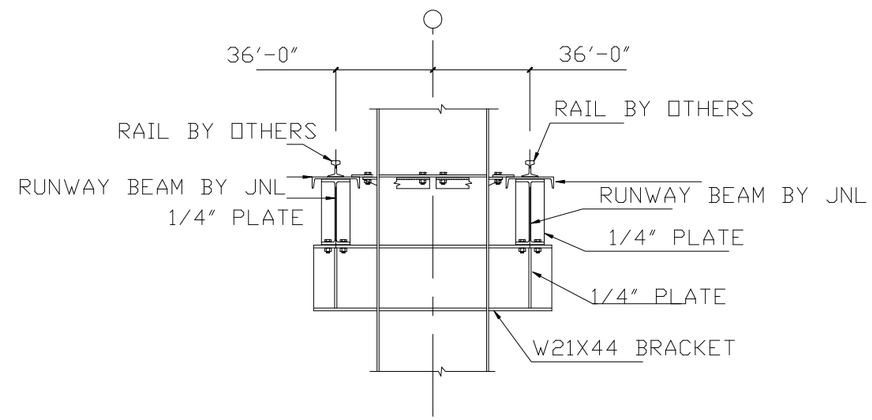

ALL BOLTS TO BE 3/4 A325 BOLTS

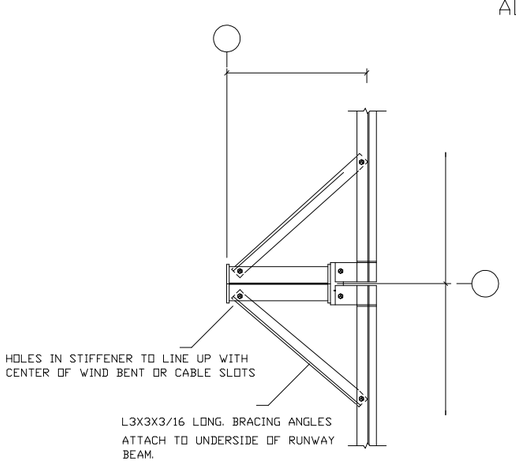

WIND BENT OFFSET 8" TO CLEAR
LONG. BRACING ANGLES.

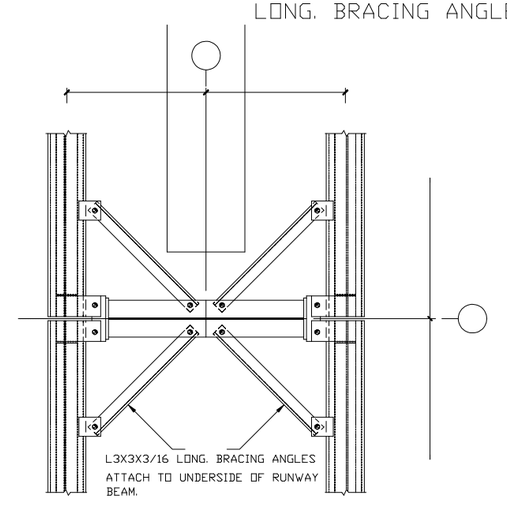

BUILD IT WITH STEEL BUILD IT TO LAST
JNL
STEEL COMPONENTS, INC.
432-758-9900
430 US HWY 180 W
SEMINOLE,TX 79360

CUSTOMER INFO

PROJECT
PB50554
SHARP OILFIELD SERVICES
ODESSA TEXAS 79763

SHEET NAME/TITLE
CRANE PLAN

DRAWN BY	DATE
BN	4/18/23
CHECKED BY	DATE
BN	4/18/23
APPROVED BY	DATE
	4/18/23

SHEET NO.	REV.	SCALE
PN	--	NTS

REVISIONS

NO.	NOTES	BY	DATE
--	--	--	00-00-00

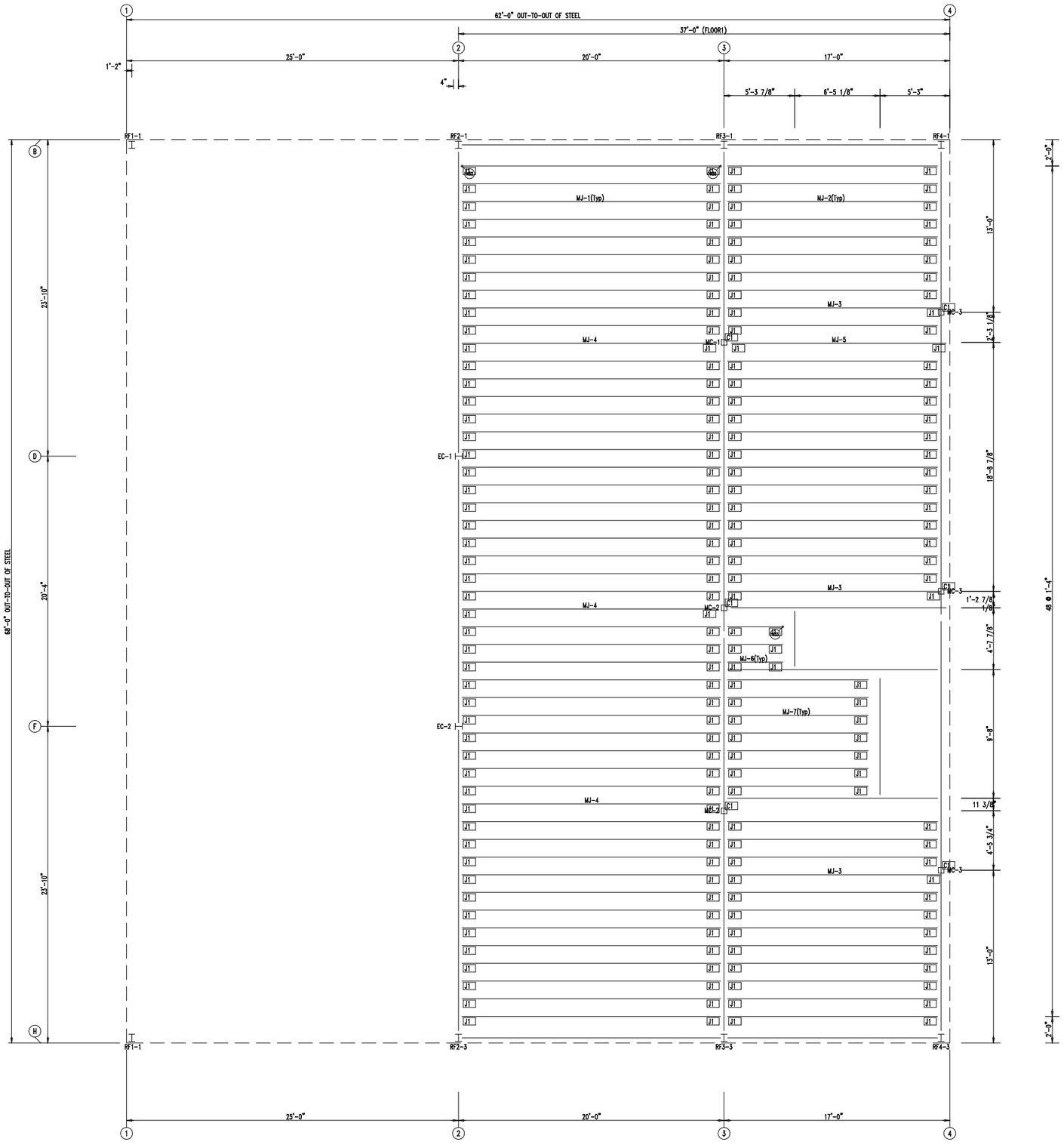

FLOOR JOISTS

JOIST BOLT TABLE				
☐ ID	QUAN	TYPE	DIA	LENGTH
J1	2	A325	3/4"	2 1/2"

SUPPORT COLUMN BOLT TABLE				
☐ ID	QUAN	TYPE	DIA	LENGTH
C1	4	A325	3/4"	2 1/2"

MEMBER TABLE		
MARK	PART	LENGTH
MC-1	T035035D	10'-4 1/2"
MC-2	T035035D	10'-4 1/2"
MC-3	T035035D	10'-4 1/2"
MJ-1	10X25Z12	19'-5"
MJ-2	10X27Z14	16'-1"
MJ-3	10X27Z14	16'-1"
MJ-4	10X25Z12	19'-5"
MJ-5	10X27Z14	16'-1"
MJ-6	10X27Z14	5'-0 3/8"
MJ-7	10X27Z14	11'-5 1/2"

BUILD IT WITH STEEL
BUILD IT TO LAST
JNL
STEEL COMPONENTS, INC.
432-758-9900
430 US HWY 180 W
SEMINOLE,TX 79360

CUSTOMER INFO

PROJECT
A

SHARP OILFIELD SERVICES
ODESSA TEXAS 79763

SHEET NAME/TITLE
FLOOR JOISTS

DRAWN BY	DATE
BN	5/19/23
CHECKED BY	DATE
BN	5/19/23
APPROVED BY	DATE
	5/19/23

SHEET NO.	REV.	SCALE
E32 of 55-		NTS

REVISIONS			
NO.	NOTES	BY	DATE
--	--	--	00-00-00

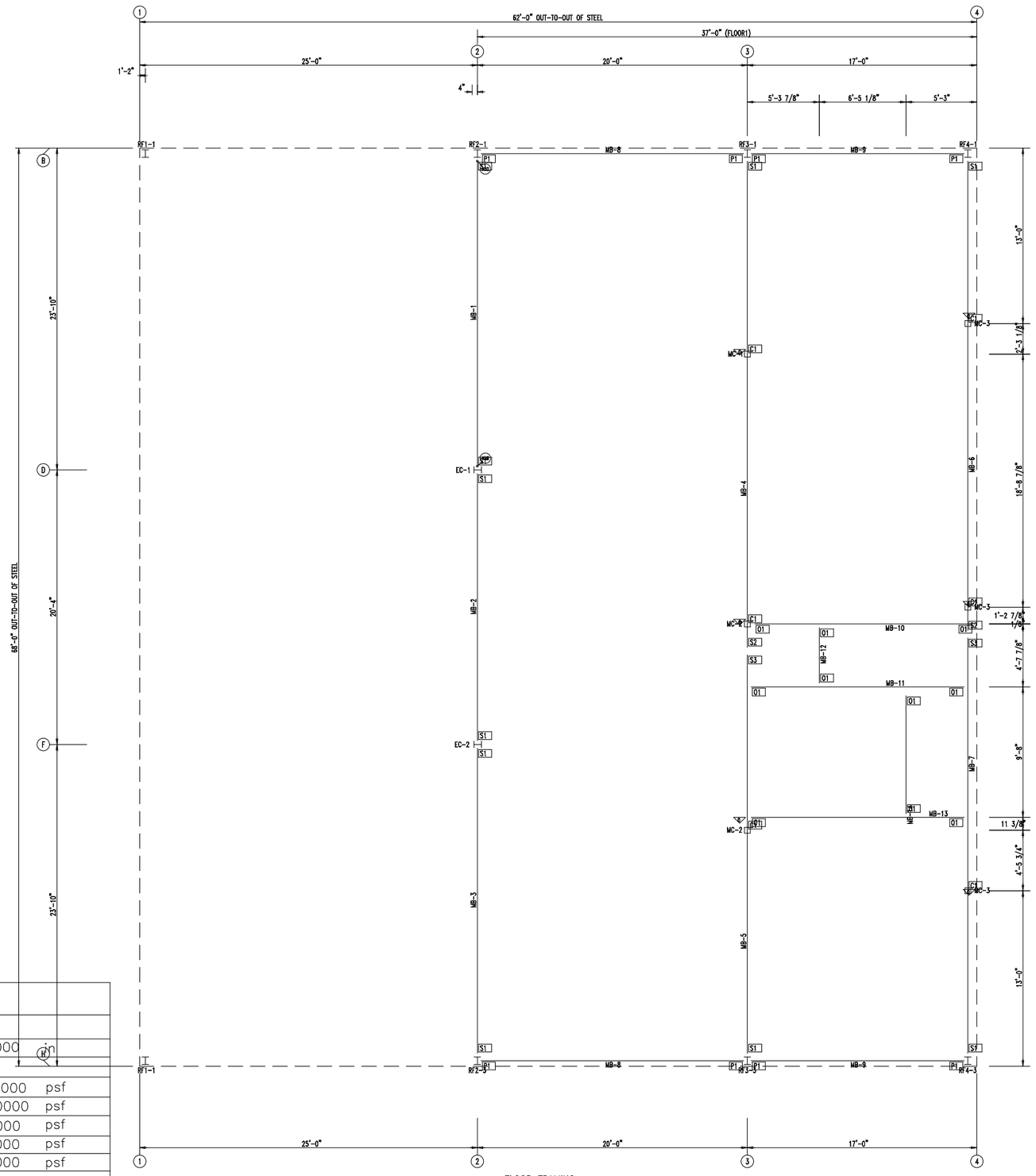

FLOOR FRAMING

Floor Loads		
Deck Type:	PW	
Deck Thickness:	1.5000 in	
Use:	O	
Dead:	17.0000	psf
Live:	80.0000	psf
Partition:	0.0000	psf
Collateral Above:	3.0000	psf
Collateral Below:	3.0000	psf
Dead + Live Deflection:	L/ 240	
Live Deflection:	L/ 360	

PERIMETER BEAM BOLT TABLE

☐ ID	QUAN	TYPE	DIA	LENGTH
P1	2	A325	3/4"	2 1/2"

SUPPORT BEAM BOLT TABLE

☐ ID	QUAN	TYPE	DIA	LENGTH
S1	3	A325	3/4"	2 1/2"
S2	6	A325	3/4"	2 1/2"
S3	4	A325	3/4"	2 1/2"

OPENING BOLT TABLE

☐ ID	QUAN	TYPE	DIA	LENGTH
O1	2	A325	3/4"	2 1/2"

SUPPORT COLUMN BOLT TABLE

☐ ID	QUAN	TYPE	DIA	LENGTH
C1	4	A325	3/4"	2 1/2"

MEMBER TABLE

MARK	PART	LENGTH
MB-1	W1466020	22'-8 1/8"
MB-2	W1464020	20'-2 3/4"
MB-3	W1466020	22'-8 1/8"
MB-4	W1464025	36'-2"
MB-5	W1464025	29'-8"
MB-6	W1464020	34'-9"
MB-7	W1464020	30'-9"
MB-8	W10X12	19'-10 3/4"
MB-9	W10X12	16'-6 3/4"
MB-10	W10X12	16'-4 1/4"
MB-11	W10X12	11'-7 5/8"
MB-12	C10x15.3	4'-4 3/16"
MB-13	W10X12	16'-4 1/4"
MB-14	C10x15.3	9'-3 7/8"
MC-1	T035035D	10'-4 1/2"
MC-2	T035035D	10'-4 1/2"
MC-3	T035035D	10'-4 1/2"

BUILD IT WITH STEEL
BUILD IT TO LAST
JNL
STEEL COMPONENTS, INC.
432-758-9900
430 US HWY 180 W
SEMINOLE,TX 79360

CUSTOMER INFO

PROJECT
A
SHARP OILFIELD SERVICES
ODESSA TEXAS 79763

SHEET NAME/TITLE
FLOOR FRAMING

DRAWN BY	DATE
BN	5/19/23
CHECKED BY	DATE
BN	5/19/23
APPROVED BY	DATE
	5/19/23

SHEET NO.	REV.	SCALE
E33 of 55-		NTS

REVISIONS

NO.	NOTES	BY	DATE
--	--	--	00-00-00

SUPPORT BEAM CONNECTION TABLE										
	START					END				
	Conn. Type	Length	Thickness	# Rows	Bolt Dia.	Conn. Type	Length	Thickness	# Rows	Bolt Dia.
W1206030	S9	6.000	.375	2	0.750	S9	6.000	.375	2	0.750
W1284030	S9	6.000	.375	2	0.750	S9	6.000	.375	2	0.750
W1206030	S9	6.000	.375	2	0.750	S9	6.000	.375	2	0.750
W1264030	S9	6.000	.375	2	0.750	FE	6.000	.625		0.750
W1264030	FE	6.000	.625		0.750	S9	6.000	.375	2	0.750
W1064030	S9	6.000	.375	2	0.750	FE	6.000	.625		0.750
W1064030	FE	6.000	.625		0.750	S9	6.000	.375	2	0.750

PERIMETER BEAM CONNECTION TABLE										
	START					END				
	Conn. Type	Length	Thickness	# Rows	Bolt Dia.	Conn. Type	Length	Thickness	# Rows	Bolt Dia.
W10X12	S9	6.000	.375	2	0.750	S9	6.000	.375	2	0.750

JOIST CONNECTION TABLE										
	START					END				
	Conn. Type	Length	Thickness	# Rows	Bolt Dia.	Conn. Type	Length	Thickness	# Rows	Bolt Dia.
10X25Z12	S9	6.000	.375	2	0.750	S9	6.000	.375	2	0.750
10X27Z14	S9	6.000	.375	2	0.750	S9	6.000	.375	2	0.750

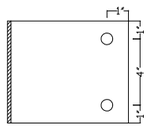

S9 CONNECTION

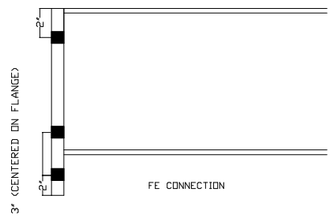

FE CONNECTION

JNL STEEL COMPONENTS, INC.
BUILD IT WITH STEEL BUILD IT TO LAST
432-758-9900
430 US HWY 180 W
SEMINOLE,TX 79360

CUSTOMER INFO

PROJECT
A

SHARP OILFIELD SERVICES
ODESSA TEXAS 79763

SHEET NAME/TITLE
FLOOR FRAMING

DRAWN BY	DATE
BN	4/11/23
CHECKED BY	DATE
BN	4/11/23
APPROVED BY	DATE
	4/11/23

SHEET NO.	REV.	SCALE
E34 of 55-		NTS

REVISIONS

NO.	NOTES	BY	DATE
--	--	--	00-00-00

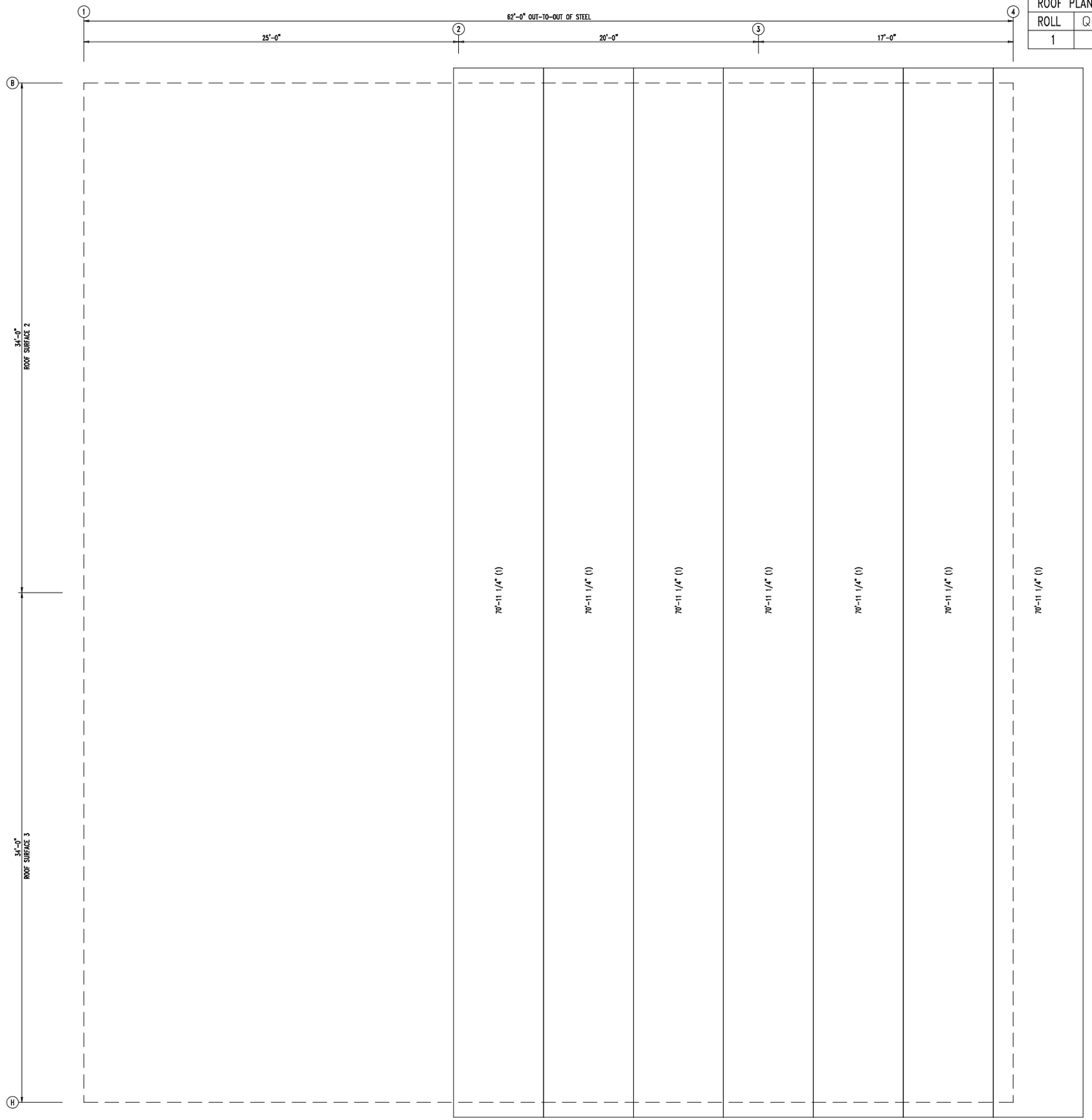

ROOF INSULATION
INSULATION: 3.00" Thick VR

INSULATION TABLE
ROOF PLAN

ROLL	QUAN	MARK	WIDTH	LENGTH
1	7	RI-1	6'-0"	70'-11 1/4"

BUILD IT WITH STEEL
BUILD IT TO LAST
JNL
STEEL COMPONENTS, INC.
432-758-9900
430 US HWY 180 W
SEMINOLE,TX 79360

CUSTOMER INFO

PROJECT
PB50554
SHARP OILFIELD SERVICES
ODESSA TEXAS 79763

SHEET NAME/TITLE
ROOF INSULATION

DRAWN BY	DATE
BN	5/19/23
CHECKED BY	DATE
BN	5/19/23
APPROVED BY	DATE
	5/19/23

SHEET NO.	REV.	SCALE
E35 of 55-		NTS

REVISIONS

NO.	NOTES	BY	DATE
--	--	--	00-00-00

INSULATION TABLE ROOF PLAN				
ROLL	QUAN	MARK	WIDTH	LENGTH
100	30	RI-100	6'-0"	83'-1 1/4"

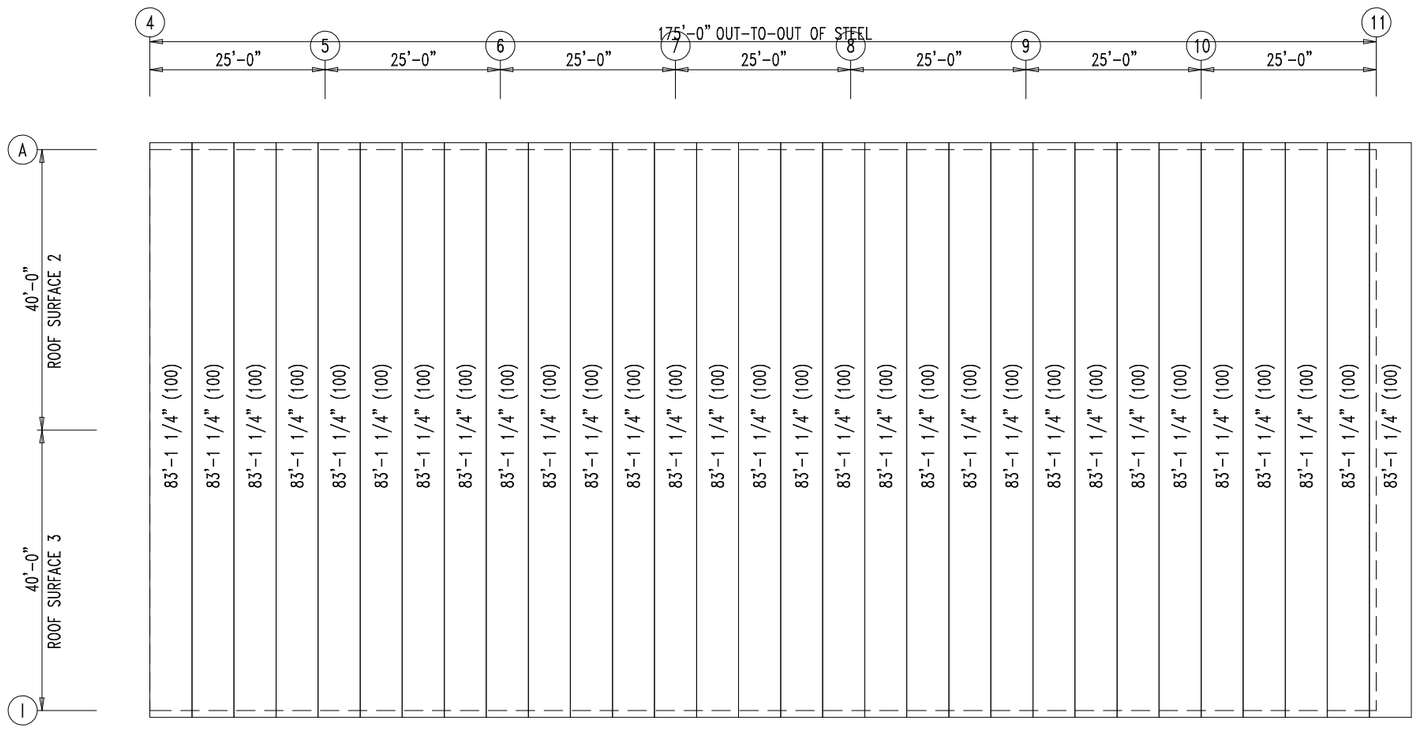

ROOF INSULATION

INSULATION: 3.00" Thick VR

JNL STEEL COMPONENTS, INC.
BUILD IT WITH STEEL BUILD IT TO LAST
432-758-9900
430 US HWY 180 W
SEMINOLE,TX 79360

CUSTOMER INFO

PROJECT
PB50554
SHARP OILFIELD SERVICES
ODESSA TEXAS 79763

SHEET NAME/TITLE
ROOF INSULATION

DRAWN BY	DATE
BN	4/19/23
CHECKED BY	DATE
BN	4/19/23
APPROVED BY	DATE
	4/19/23

SHEET NO.	REV.	SCALE
E36 of 55-		NTS

REVISIONS

NO.	NOTES	BY	DATE
--	--	--	00-00-00

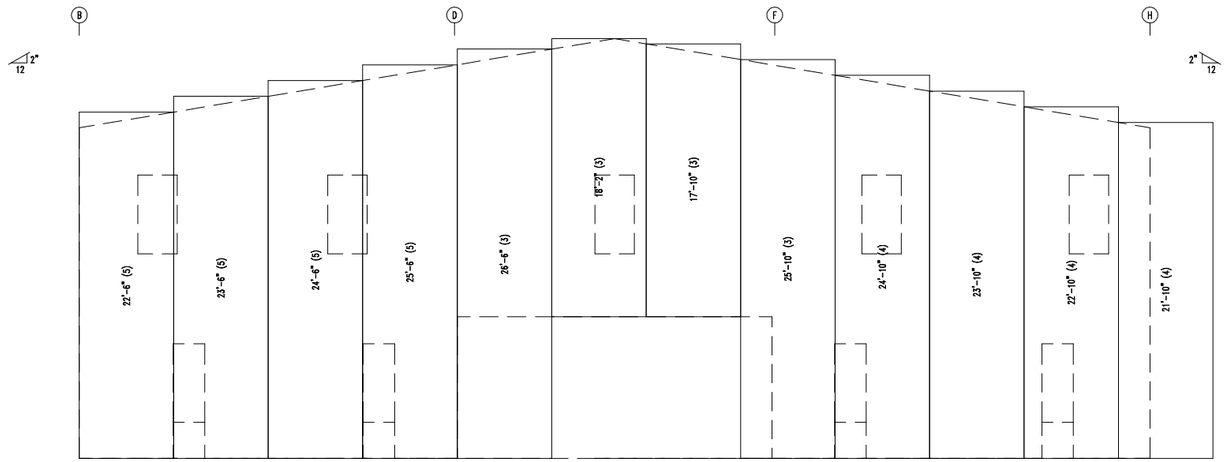

ENDWALL INSULATION: FRAME LINE 2

INSULATION: 3.00" Thick VR

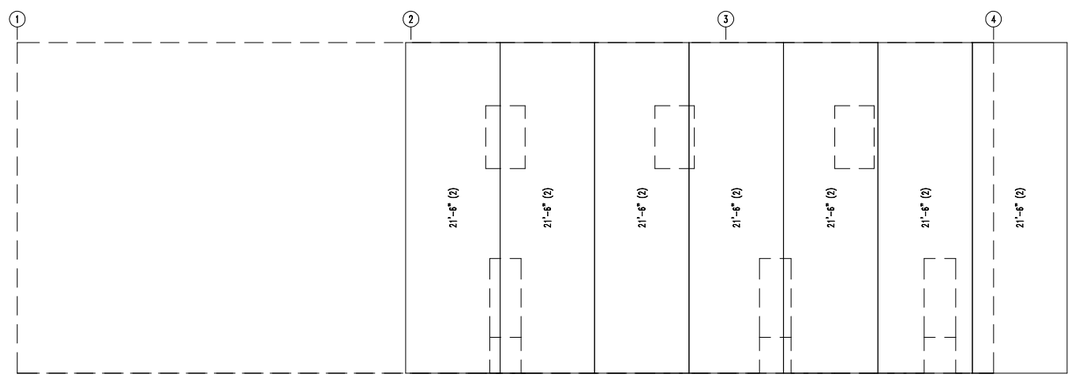

SIDEWALL INSULATION: FRAME LINE H

INSULATION: 3.00" Thick VR

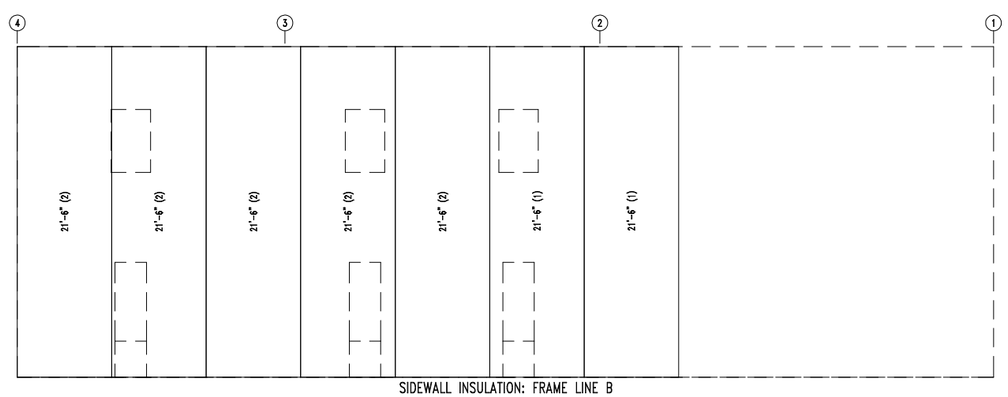

SIDEWALL INSULATION: FRAME LINE B

INSULATION: 3.00" Thick VR

INSULATION TABLE
FRAME LINE 1 H B

ROLL	QUAN	MARK	WIDTH	LENGTH
1	1	WI-1	6'-0"	43'-0"
2	3	WI-2	6'-0"	86'-0"
3	1	WI-3	6'-0"	88'-4"
4	1	WI-4	6'-0"	93'-4"
5	1	WI-5	6'-0"	96'-0"

LEGEND:
43'-0" (1)
Length (Roll #)

BUILD IT WITH STEEL
BUILD IT TO LAST
JNL
STEEL COMPONENTS, INC.
432-758-9900
430 US HWY 180 W
SEMINOLE,TX 79360

CUSTOMER INFO

PROJECT
PB50554
SHARP OILFIELD SERVICES
ODESSA TEXAS 79763

SHEET NAME/TITLE
WALL INSULATION

DRAWN BY	DATE
BN	5/19/23
CHECKED BY	DATE
BN	5/19/23
APPROVED BY	DATE
.	5/19/23

SHEET NO.	REV.	SCALE
E37 of 55-		NTS

REVISIONS

NO.	NOTES	BY	DATE
--	--	--	00-00-00

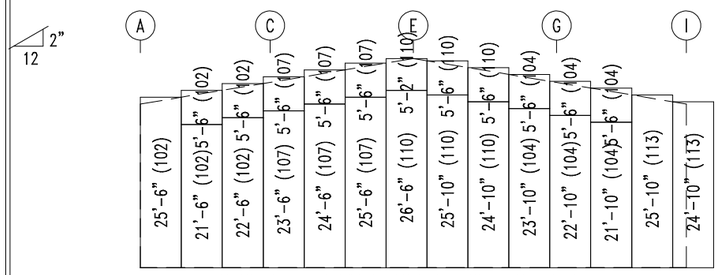

ENDWALL INSULATION: FRAME LINE 4

INSULATION: 3.00" Thick VR

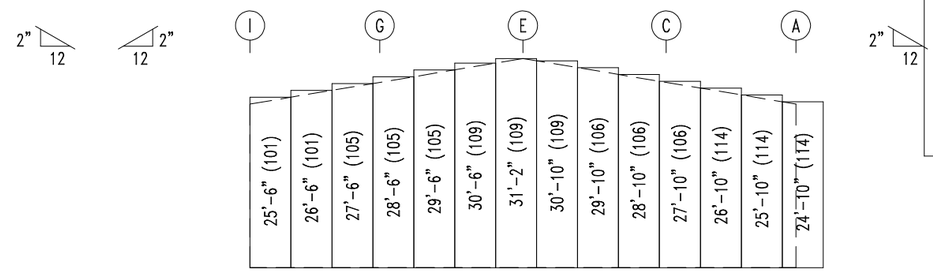

ENDWALL INSULATION: FRAME LINE 11

INSULATION: 3.00" Thick VR

INSULATION TABLE
FRAME LINE 4 I 11 A

ROLL	QUAN	MARK	WIDTH	LENGTH
100	1	WI-100	6'-0"	49'-0"
101	1	WI-101	6'-0"	76'-6"
102	1	WI-102	6'-0"	80'-6"
103	3	WI-103	6'-0"	82'-0"
104	1	WI-104	6'-0"	85'-0"
105	1	WI-105	6'-0"	85'-6"
106	1	WI-106	6'-0"	86'-6"
107	1	WI-107	6'-0"	90'-0"
108	4	WI-108	6'-0"	90'-6"
109	1	WI-109	6'-0"	92'-6"
110	1	WI-110	6'-0"	93'-4"
111	4	WI-111	6'-0"	98'-0"
112	1	WI-112	6'-0"	99'-0"
113	1	WI-113	6'-0"	99'-8"
114	1	WI-114	6'-0"	102'-0"

LEGEND:
49'-0" (1)
Length (Roll #)

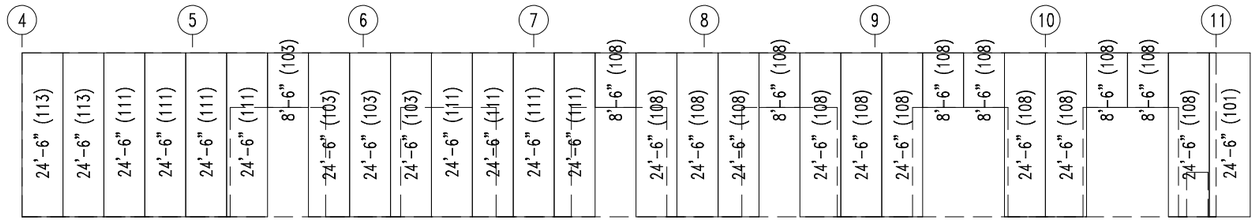

SIDEWALL INSULATION: FRAME LINE I

INSULATION: 3.00" Thick VR

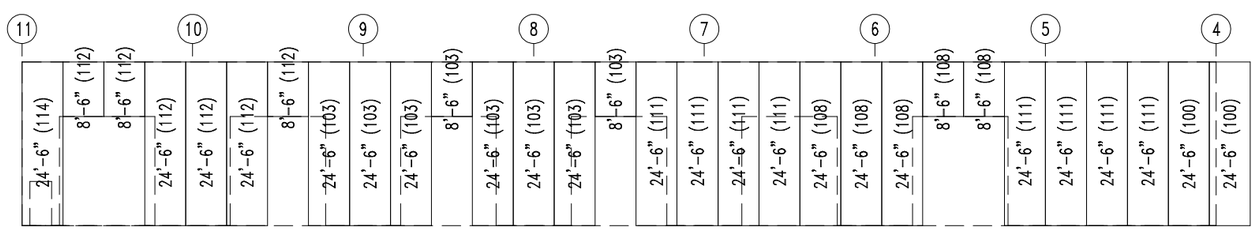

SIDEWALL INSULATION: FRAME LINE A

INSULATION: 3.00" Thick VR

BUILD IT WITH STEEL
BUILD IT TO LAST
JNL
STEEL COMPONENTS, INC.
432-758-9900
430 US HWY 180 W
SEMINOLE,TX 79360

CUSTOMER INFO

PROJECT
PB50554
SHARP OILFIELD SERVICES
ODESSA TEXAS 79763

SHEET NAME/TITLE
WALL INSULATION

DRAWN BY	DATE
BN	4/19/23
CHECKED BY	DATE
BN	4/19/23
APPROVED BY	DATE
	4/19/23

SHEET NO.	REV.	SCALE
E38 of 55-		NTS

REVISIONS

NO.	NOTES	BY	DATE
--	--	--	00-00-00

TRIM TABLE FRAME LINE 4	
◇ ID	PART
1	TRJTR
2	TRHTR

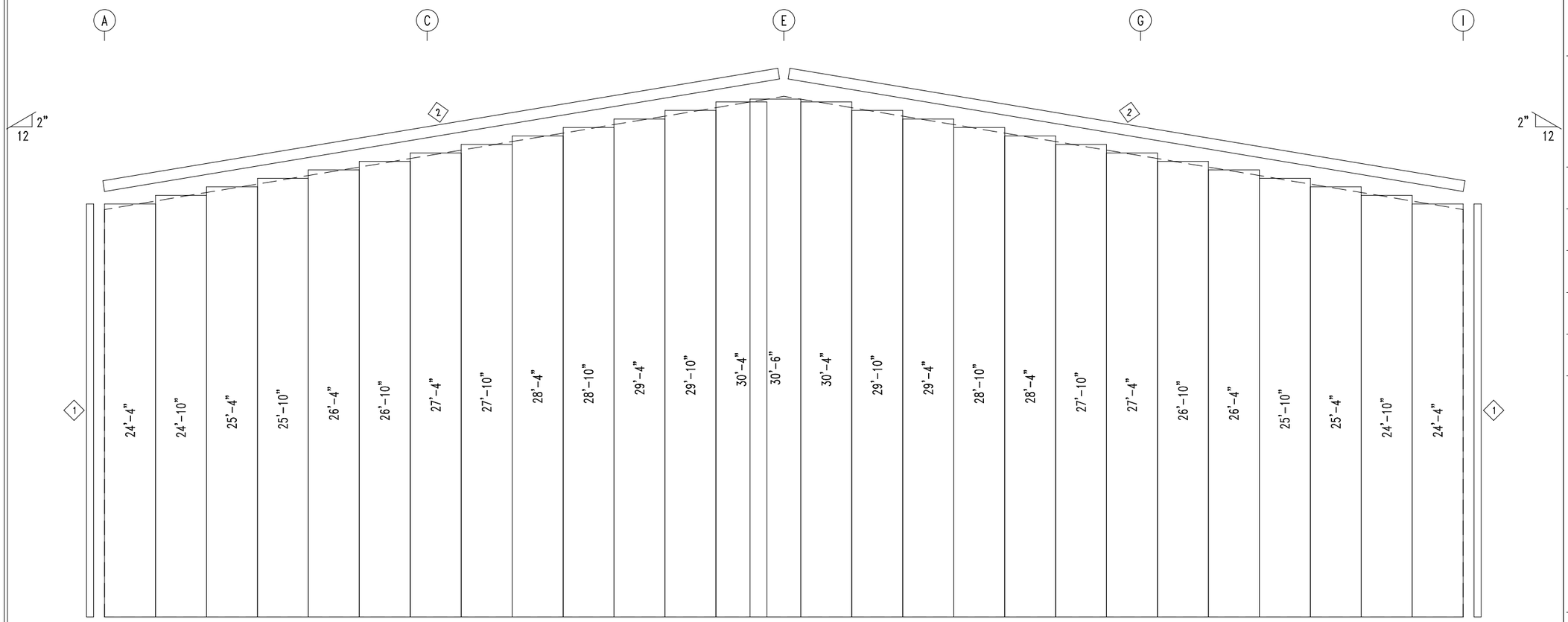

ENDWALL LINER SHEETING & TRIM: FRAME LINE 4

PANELS: 26 Ga. PBR – Brownstone

BUILD IT WITH STEEL
BUILD IT TO LAST
JNL
STEEL COMPONENTS, INC.

432-758-9900
430 US HWY 180 W
SEMINOLE,TX 79360

CUSTOMER INFO

PROJECT
PB50554
SHARP OILFIELD SERVICES
ODESSA TEXAS 79763

SHEET NAME/TITLE
WALL LINER PANEL

DRAWN BY	DATE
BN	4/19/23
CHECKED BY	DATE
BN	4/19/23
APPROVED BY	DATE
	4/19/23

SHEET NO.	REV.	SCALE
E39 of 55-		NTS

REVISIONS

NO.	NOTES	BY	DATE
--	--	--	00-00-00

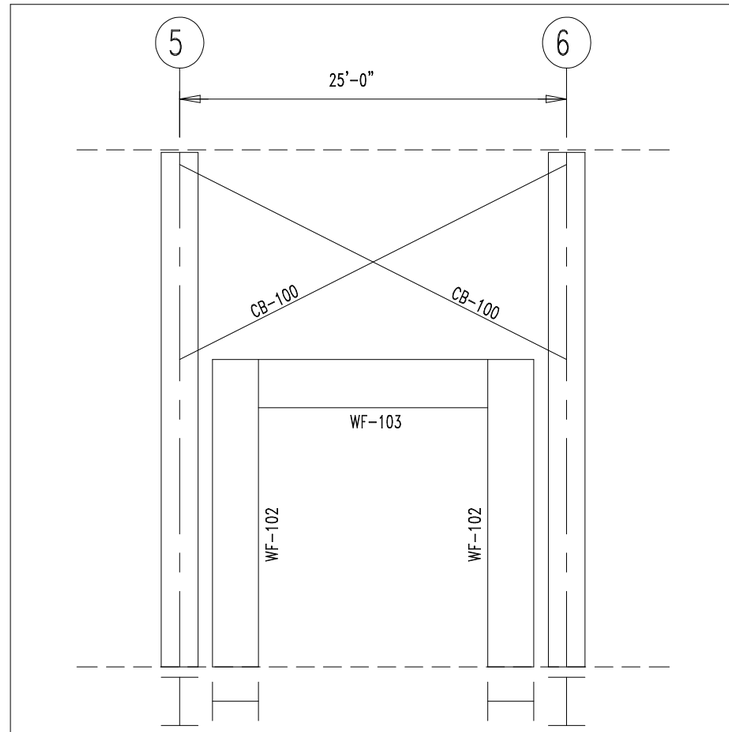

FRAME LINE E

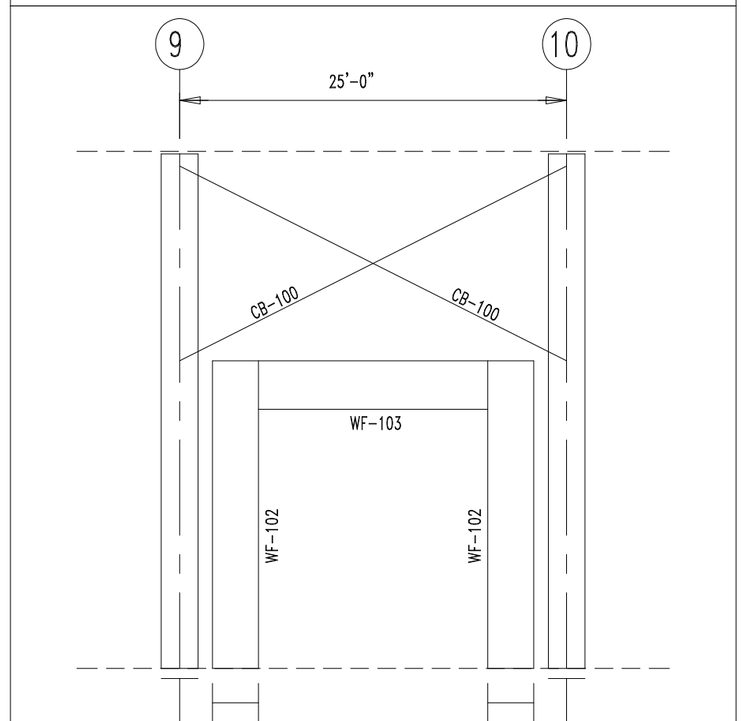

FRAME LINE E

BUILDING BRACING REACTIONS

Loc	Wall Line	Col Line	± Reactions (k) Wind Horz	Wind Vert	Seismic Horz	Seismic Vert	Note
INT	E	5 ,6	0.0	5.0	0.0	0.9	(d)
	E	9 ,10	0.0	5.0	0.0	0.9	(d)
	E	5 ,6	2.1	3.3	0.4	0.6	(b)
	E	9 ,10	2.1	3.3	0.4	0.6	(b)

(b)Wind bent in bay, base above finish floor
(d)X-Bracing above wind bent, base above finish floor

MEMBER TABLE

Mark	Part	Length
WF-100	W1464020	22'-0"
WF-101	W1464020	21'-3 3/8"
WF-102	W1464020	17'-10"
WF-103	W1464020	21'-3 5/16"
CB-100	CB0250	27'-10"

BUILD IT WITH STEEL
BUILD IT TO LAST
JNL
STEEL COMPONENTS, INC.
432-758-9900
430 US HWY 180 W
SEMINOLE,TX 79360

CUSTOMER INFO

PROJECT
PB50554
SHARP OILFIELD SERVICES
ODESSA TEXAS 79763

SHEET NAME/TITLE
BRACING DRAWING

DRAWN BY	DATE
BN	4/19/23
CHECKED BY	DATE
BN	4/19/23
APPROVED BY	DATE
.	4/19/23

SHEET NO.	REV.	SCALE
E38 of 47-		NTS

REVISIONS

NO.	NOTES	BY	DATE
--	--	--	00-00-00

SPLICE BOLTS					
Splice Mark	Quan Top/	Bot	-----Bolt----- Type	Dia	Length
SP- 1	4	4	A325	0.750	2.50

MEMBER SIZE TABLE		
MARK	MEMBER	LENGTH
WF-2	W1264030	17'-7 3/8"
WF-1	W1464020	17'-10 1/2"

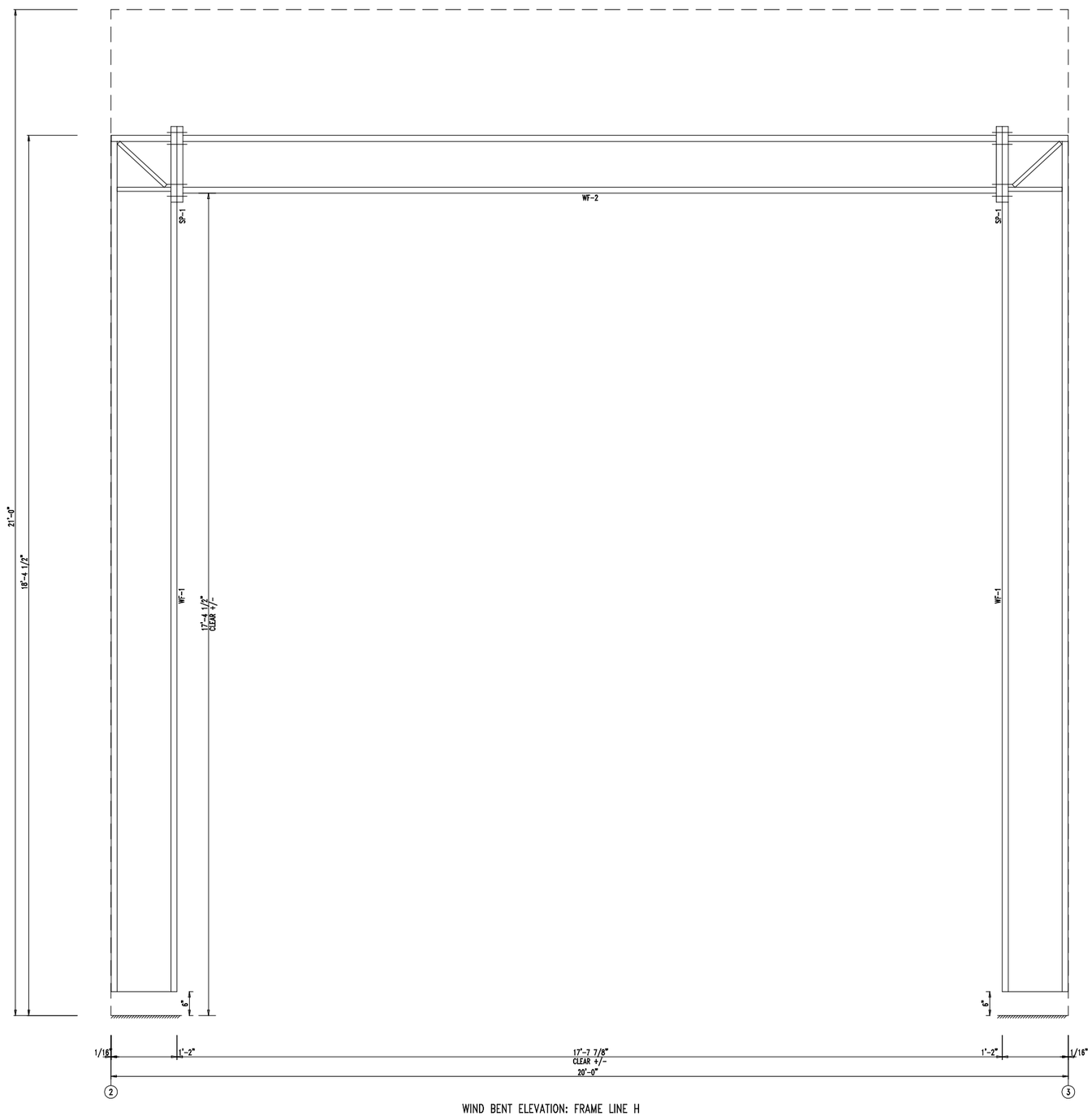

WIND BENT ELEVATION: FRAME LINE H

BUILD IT WITH STEEL
BUILD IT TO LAST
JNL
STEEL COMPONENTS, INC.

432-758-9900
430 US HWY 180 W
SEMINOLE,TX 79360

CUSTOMER INFO

PROJECT
PB50554

SHARP OILFIELD SERVICES

ODESSA TEXAS 79763

SHEET NAME/TITLE
WIND BENT ELEVATION

DRAWN BY	DATE
BN	5/19/23
CHECKED BY	DATE
BN	5/19/23
APPROVED BY	DATE
	5/19/23

SHEET NO.	REV.	SCALE
E46 of 55-		NTS

REVISIONS			
NO.	NOTES	BY	DATE
--	--	--	00-00-00

SPLICE BOLTS					
Splice Mark	Quan Top/	Bot	-----Bolt----- Type	Dia	Length
SP- 1	4	4	A325	0.750	2.50

MEMBER SIZE TABLE		
MARK	MEMBER	LENGTH
WF-101	W1464020	21'-3 3/8"
WF-100	W1464020	22'-6"

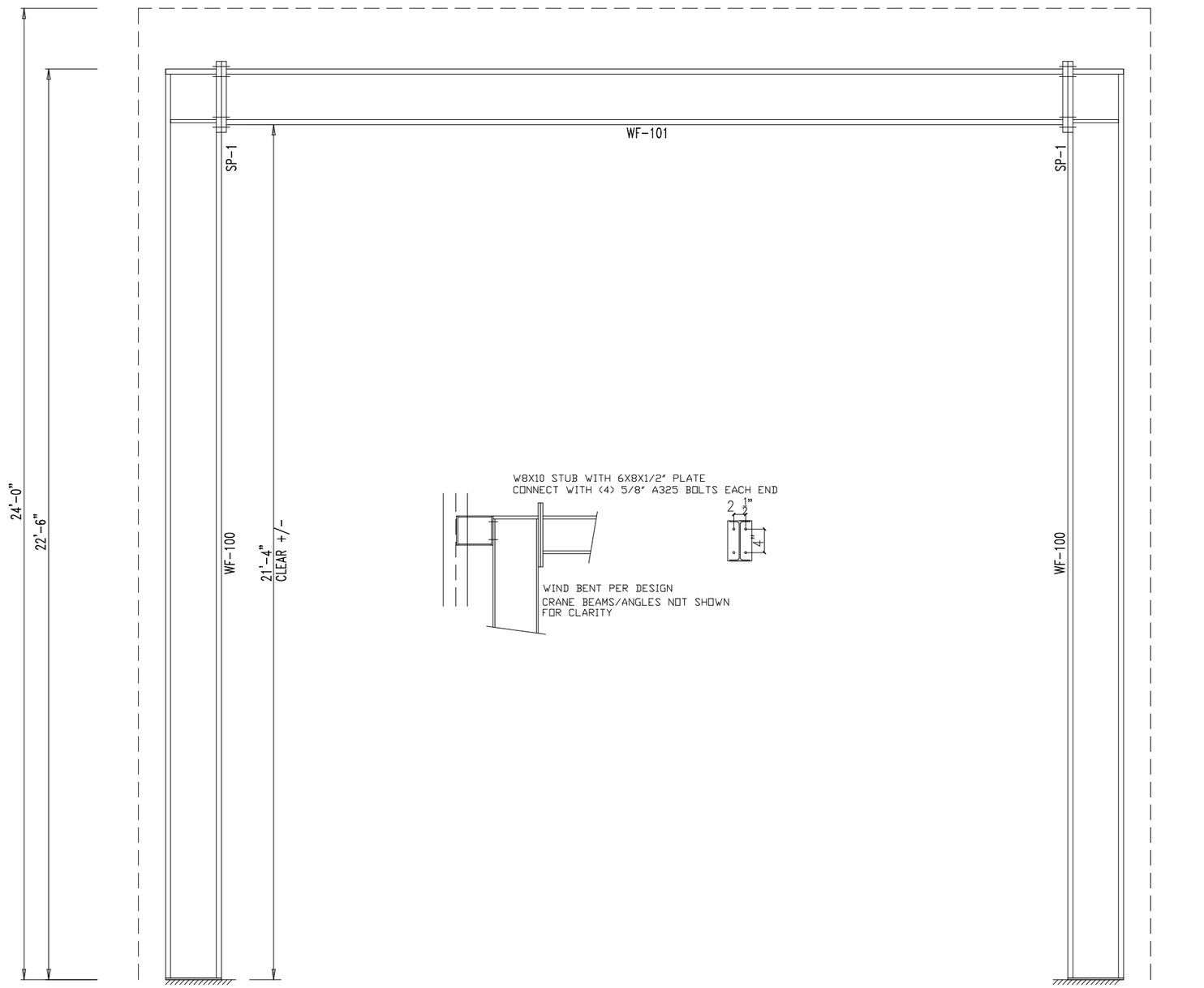

5
9

WIND BENT ELEVATION: FRAME LINE I

6
10

BUILD IT WITH STEEL BUILD IT TO LAST
JNL
STEEL COMPONENTS, INC.

432-758-9900
430 US HWY 180 W
SEMINOLE,TX 79360

CUSTOMER INFO

PROJECT
PB50554

SHARP OILFIELD SERVICES

ODESSA TEXAS 79763

SHEET NAME/TITLE
WIND BENT ELEVATION

DRAWN BY	DATE
BN	4/18/23
CHECKED BY	DATE
BN	4/18/23
APPROVED BY	DATE
	4/18/23

SHEET NO.	REV.	SCALE
PN	--	NTS

REVISIONS			
NO.	NOTES	BY	DATE
--	--	--	00-00-00

SPLICE BOLTS

Splice Mark	Quan Top/	Bot	-----Bolt----- Type	Dia	Length
SP- 1	4	4	A325	0.750	2.50

MEMBER SIZE TABLE

MARK	MEMBER	LENGTH
WF-3	W1264030	17'-7 3/8"
WF-1	W1464020	17'-10 1/2"

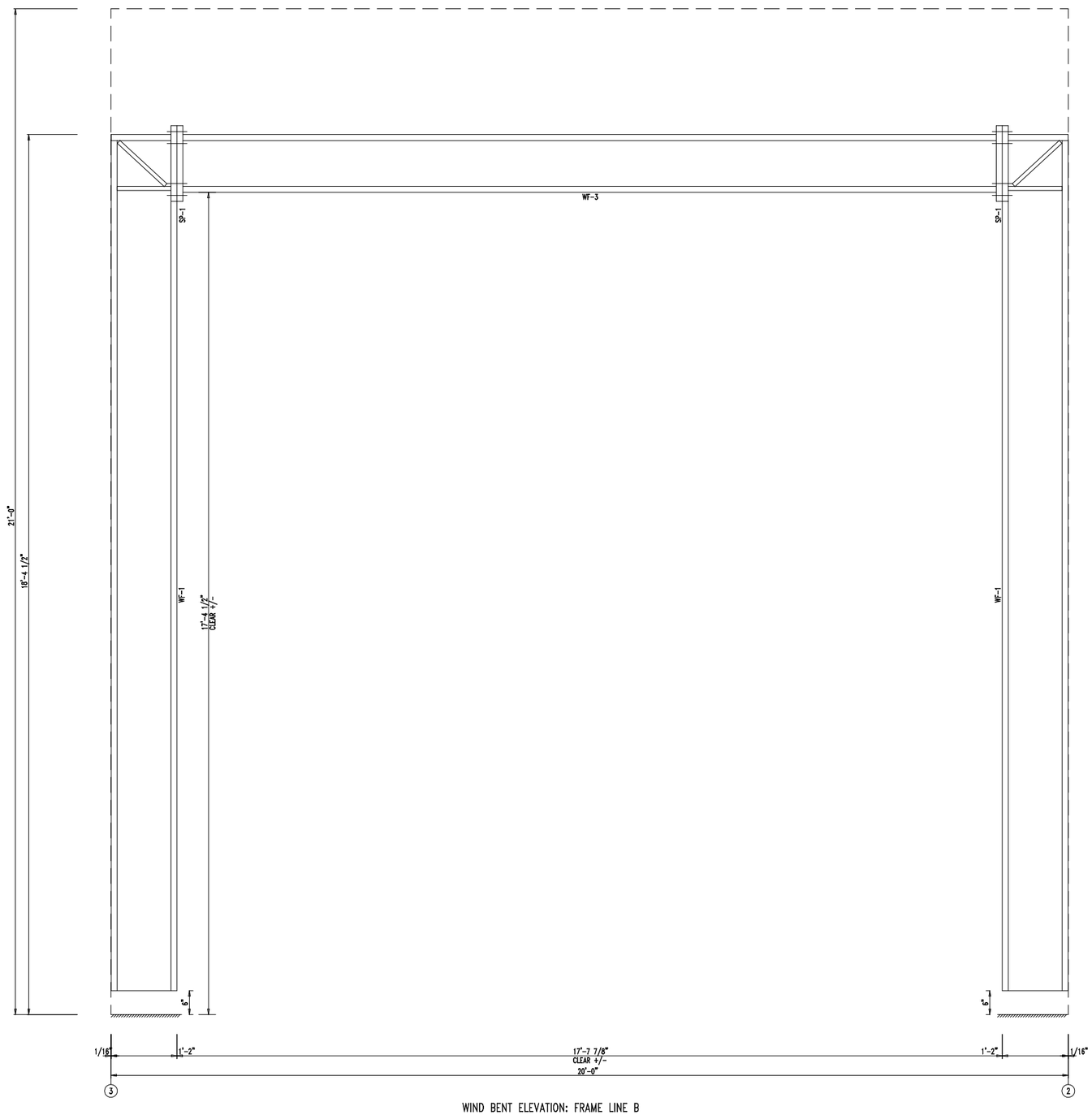

WIND BENT ELEVATION: FRAME LINE B

BUILD IT WITH STEEL
BUILD IT TO LAST
JNL
STEEL COMPONENTS, INC.

432-758-9900
430 US HWY 180 W
SEMINOLE,TX 79360

CUSTOMER INFO

PROJECT
PB50554

SHARP OILFIELD SERVICES

ODESSA TEXAS 79763

SHEET NAME/TITLE
WIND BENT ELEVATION

DRAWN BY	DATE
BN	5/19/23
CHECKED BY	DATE
BN	5/19/23
APPROVED BY	DATE
	5/19/23

SHEET NO.	REV.	SCALE
E49 of 55-		NTS

REVISIONS

NO.	NOTES	BY	DATE
--	--	--	00-00-00

SPLICE BOLTS					
Splice Mark	Quan Top/	Bot	-----Bolt----- Type	Dia	Length
SP- 1	4	4	A325	0.750	2.50

MEMBER SIZE TABLE		
MARK	MEMBER	LENGTH
WF-101	W1464020	21'-3 3/8"
WF-100	W1464020	22'-6"

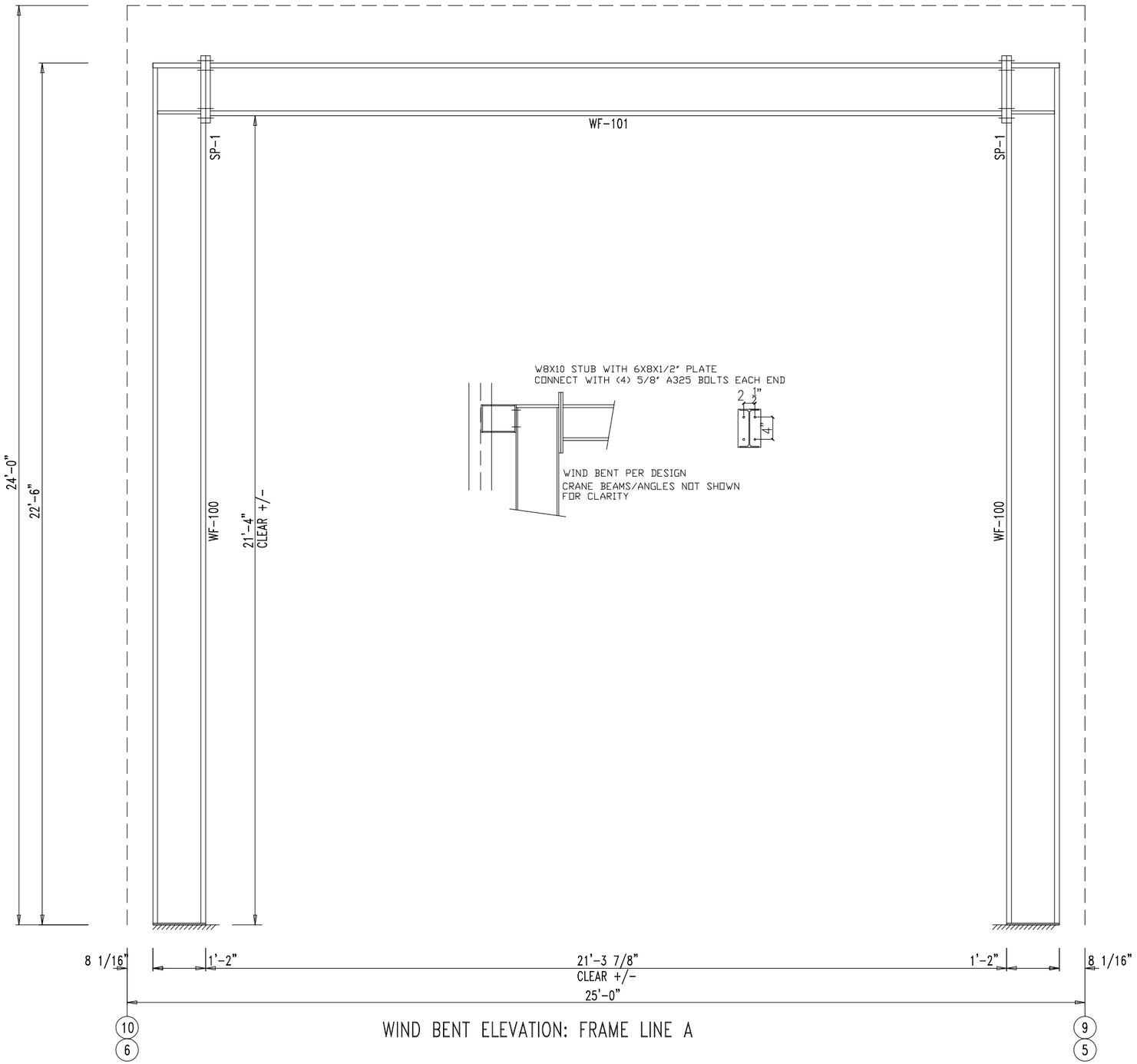

WIND BENT ELEVATION: FRAME LINE A

BUILD IT WITH STEEL BUILD IT TO LAST
JNL
STEEL COMPONENTS, INC.

432-758-9900
430 US HWY 180 W
SEMINOLE,TX 79360

CUSTOMER INFO

PROJECT
PB50554

SHARP OILFIELD SERVICES

ODESSA TEXAS 79763

SHEET NAME/TITLE
WIND BENT ELEVATION

DRAWN BY	DATE
BN	4/18/23
CHECKED BY	DATE
BN	4/18/23
APPROVED BY	DATE
	4/18/23

SHEET NO.	REV.	SCALE
PN	--	NTS

REVISIONS			
NO.	NOTES	BY	DATE
--	--	--	00-00-00

SPLICE BOLTS					
Splice Mark	Quan Top/	Bot	-----Bolt----- Type	Dia	Length
SP- 1	4	4	A325	0.750	2.50

MEMBER SIZE TABLE		
MARK	MEMBER	LENGTH
WF-103	W1464020	21'-3 5/16"
WF-102	W1464020	18'-4"

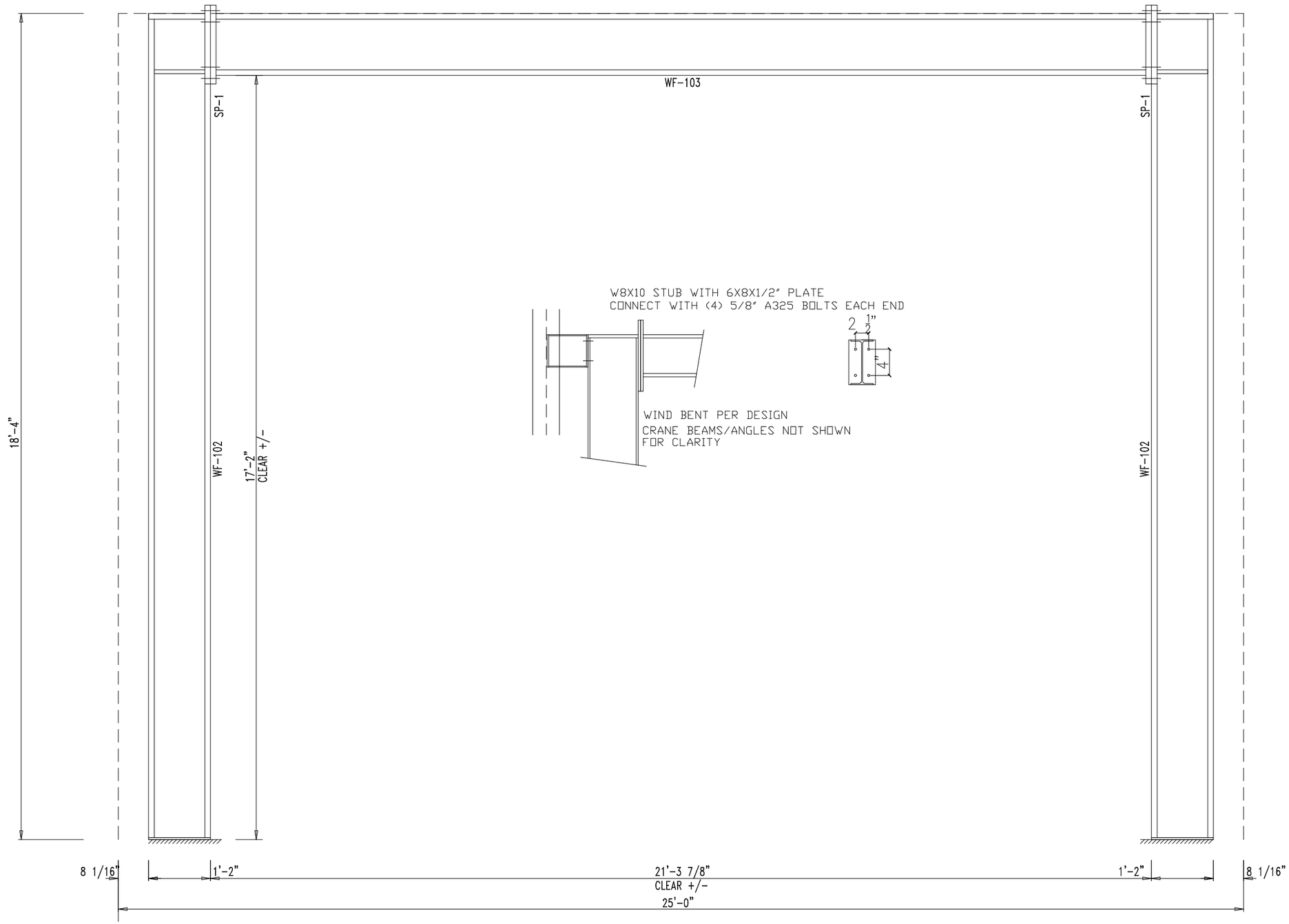

WIND BENT ELEVATION: FRAME LINE E

JNL STEEL COMPONENTS, INC.
BUILD IT WITH STEEL BUILD IT TO LAST
432-758-9900
430 US HWY 180 W
SEMINOLE,TX 79360

CUSTOMER INFO

PROJECT
PB50554

SHARP OILFIELD SERVICES

ODESSA TEXAS 79763

SHEET NAME/TITLE
WIND BENT ELEVATION

DRAWN BY	DATE
BN	4/18/23
CHECKED BY	DATE
BN	4/18/23
APPROVED BY	DATE
	4/18/23

SHEET NO.	REV.	SCALE
PN	--	NTS

REVISIONS			
NO.	NOTES	BY	DATE
--	--	--	00-00-00

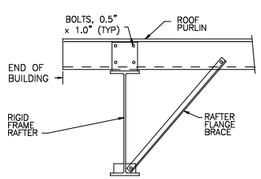

A10 ROOF PURLIN TO EXPANDABLE ENDWALL RIGID FRAME

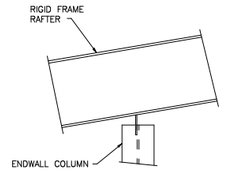

B19 COLUMN TO RIGID FRAME RAFTER

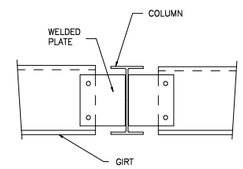

C6 GIRT TO COLUMN

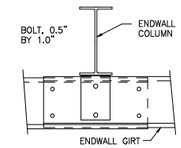

NOTE: FLANGE BRACES MAY BE PRESENT

C12 ENDWALL COLUMN TO WALL GIRT

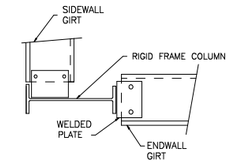

D13 CORNER COLUMN TO WALL GIRT

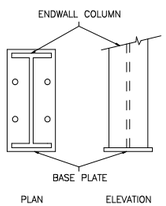

E3 BASE PLATE FOR ENDWALL COLUMN

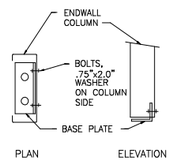

E6 BASE PLATE FOR ENDWALL COLUMN OR DOOR JAMB

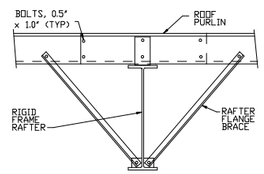

G2 ROOF PURLIN TO INTERIOR FRAME RAFTER

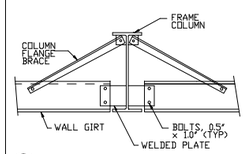

H6 WALL GIRT TO FRAME COLUMN

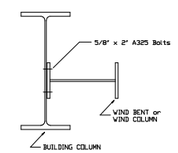

H9 WIND BENT OR WIND COLUMN TO BUILDING COLUMN

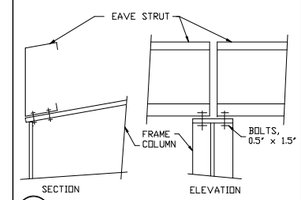

J1 EAVE STRUT TO RIGID FRAME

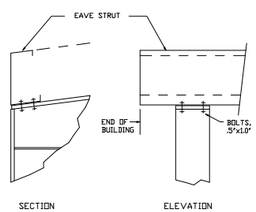

J23 EAVE STRUT TO RIGID FRAME

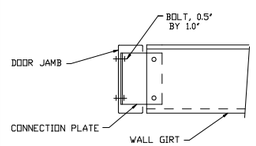

K2 WALL GIRT TO DOOR JAMB

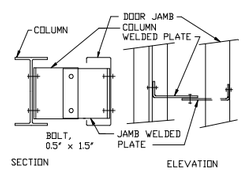

K5 WALL COLUMN TO DOOR JAMB

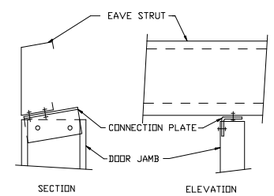

L1 DOOR JAMB TO EAVE STRUT

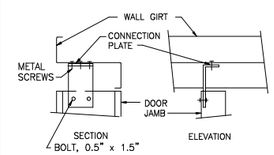

L6 DOOR JAMB TO WALL GIRT

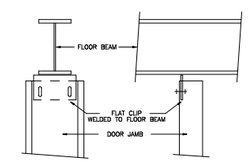

L71 DOOR JAMB TO FLOOR BEAM

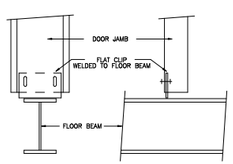

L75 DOOR JAMB TO FLOOR BEAM

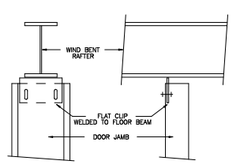

L79 DOOR JAMB TO WIND BENT

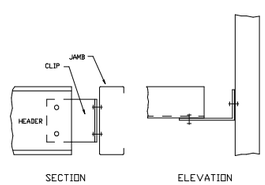

M1 HEADER TO C JAMB

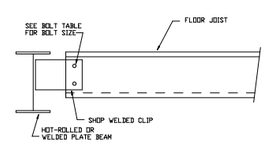

N32 FLOOR JOIST TO BEAM

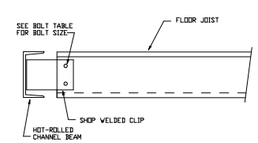

N33 FLOOR JOIST TO BEAM

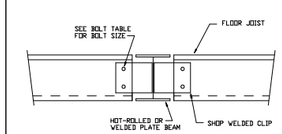

N35 FLOOR JOIST TO BEAM

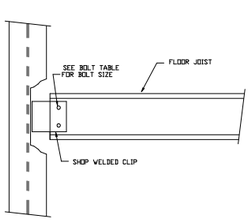

N49 FLOOR BEAM TO COLUMN WEB

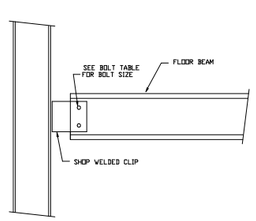

N52 FLOOR BEAM TO COLUMN FLANGE

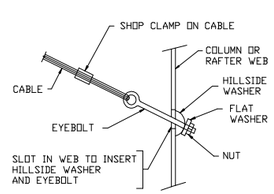

Q2 DIAGONAL CABLE, EYEBOLT END

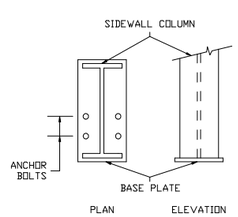

R2 ANCHOR BOLTS AT SIDEWALL COLUMN

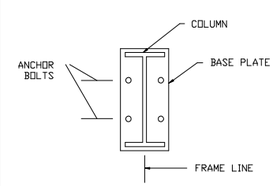

S1 INTERIOR COLUMN ANCHOR BOLTS

DT_SCRW1 – SCREW MARKER ILLUSTRATIONS

NOTE: TRIM, ANGLE, AND SCREW CONFIGURATIONS MAY NOT MATCH YOUR CONDITION. USE FOR ILLUSTRATION PURPOSES.

FOR EACH MARKER, THERE CAN BE UP TO 6 DIFFERENT SCREW USES:

① PANEL_M = SCREW FOR WALL PANEL		(WALL COLOR)
② TRIM_M = SCREW FOR TRIM (MISED ON THE WALL PANEL		(TRIM COLOR)
③ ANGLE_M = SCREW FOR ANGLE (MISED ON THE WALL PANEL		(ANGLE COLOR)
④ PANEL_R = SCREW FOR WALL PANEL ON ROOF PANEL		(ROOF COLOR)
⑤ TRIM_R = SCREW FOR TRIM (MISED ON ROOF PANEL		(TRIM COLOR)
⑥ ANGLE_R = SCREW FOR ANGLE (MISED ON ROOF PANEL		(ANGLE COLOR)

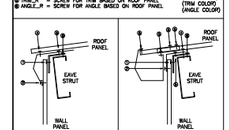

@EAVE
@EAVE_BUILD_EXTEND
@EAVE_OPEN
@EAVE_OPEN_HI
@EAVE_SINGLE_HI
@EAVE_CABLE
@EAVE_CABLE_HI
@EAVE_EXTEND
@EAVE_EXTEND_HI

@GUTTER
@GUTTER_EXTEND
@GUTTER_CANOPY
@GUTTER_VALLEY
@GUTTER_CABLE

SCREW1

BUILD IT WITH STEEL — BUILD IT TO LAST

JNL STEEL COMPONENTS, INC.

432-758-9900
430 US HWY 180 W
SEMINOLE,TX 79360

CUSTOMER INFO

PROJECT
PB50554
SHARP OILFIELD SERVICES
ODESSA TEXAS 79763

SHEET NAME/TITLE
DETAIL DRAWINGS

DRAWN BY	DATE
BN	4/18/23
CHECKED BY	DATE
BN	4/18/23
APPROVED BY	DATE
.	4/18/23

SHEET NO.	REV.	SCALE
E54 of 55-		NTS

REVISIONS

NO.	NOTES	BY	DATE
--	--	--	00-00-00

DT_SCRW1 - SCREW MARKER ILLUSTRATIONS

NOTE: TRIM, ANGLE, AND SCREW CONFIGURATIONS MAY NOT MATCH YOUR CONDITION. USE FOR ILLUSTRATION PURPOSES.

FOR EACH MARKER, THERE CAN BE UP TO 6 DIFFERENT SCREW USES:

① PANEL_W = SCREW FOR WALL PANEL (WALL COLOR)
② TRIM_W = SCREW FOR TRIM BASED ON THE WALL PANEL (TRIM COLOR)
③ ANGLE_W = SCREW FOR ANGLE BASED ON THE WALL PANEL (ANGLE COLOR)
④ PANEL_R = SCREW FOR ROOF PANEL (ROOF COLOR)
⑤ TRIM_R = SCREW FOR TRIM BASED ON ROOF PANEL (TRIM COLOR)
⑥ ANGLE_R = SCREW FOR ANGLE BASED ON ROOF PANEL (ANGLE COLOR)

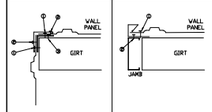

@CORNER_OUT
@CORNER_OUT_OPEN
@CORNER_OUT_PART
@CORNER_OUT_FACTA
@CORNER_OUT_FACTA_END
@CORNER_OUT_BACK_END
@CORNER_OUT_PARTN
@CORNER_OUT_PARA_END

@JAMB
@JAMB_OPEN
@JAMB_PART
@JAMB_OPEN
@JAMB_LINER
@JAMB_LINER_OPEN
@JAMB_LINER_TYPE#

SCREW3

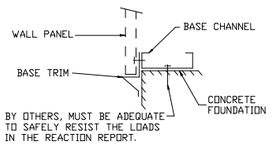

T2 SECTION THRU WALL PANEL AND CONCRETE FOUNDATION

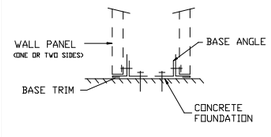

T10 SECTION THRU PARTITION BASE AND CONCRETE FLOOR

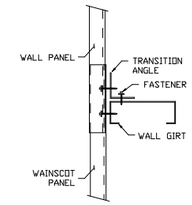

T19 TRANSITION FROM WALL PANEL TO WAINSCOT WITH PANELS LAPPED

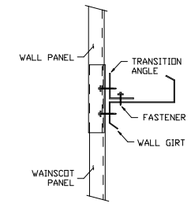

T22 TRANSITION FROM WALL PANEL TO WAINSCOT WITH PANELS LAPPED

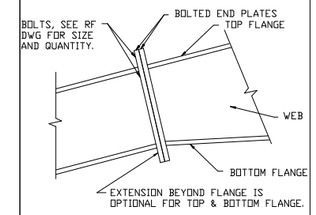

U1 BOLTED END PLATE RAFTER SPLICE

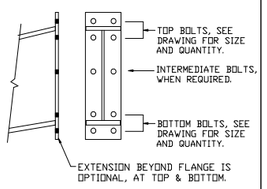

U2 BOLTED END PLATE CONNECTION AT BUILDING PEAK

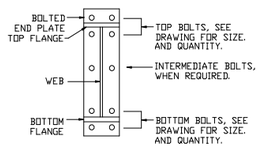

U3 BOLTS FOR RAFTER TO COLUMN CONNECTION

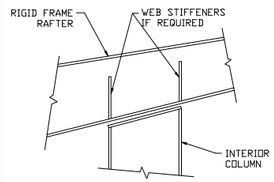

V1 INTERIOR COLUMN TO RAFTER

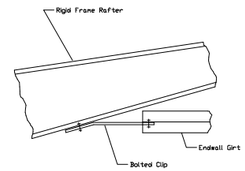

W4 SECTION OF ENDWALL GIRT TO RAFTER

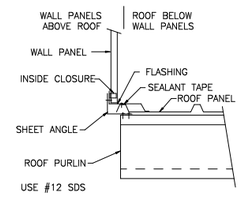

X1 SECTION THRU WALL PANELS ABOVE ROOF

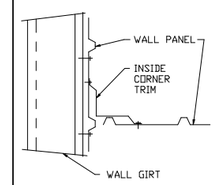

X2 SECTION THRU INSIDE CORNER OF WALL

BUILD IT WITH STEEL
BUILD IT TO LAST
JNL
STEEL COMPONENTS, INC.

432-758-9900
430 US HWY 180 W
SEMINOLE,TX 79360

CUSTOMER INFO

PROJECT
PB50554
SHARP OILFIELD SERVICES
ODESSA TEXAS 79763

SHEET NAME/TITLE
DETAIL DRAWINGS

DRAWN BY	DATE
BN	4/18/23
CHECKED BY	DATE
BN	4/18/23
APPROVED BY	DATE
.	4/18/23

SHEET NO.	REV.	SCALE
E55 of 55-		NTS

REVISIONS

NO.	NOTES	BY	DATE
--	--	--	00-00-00