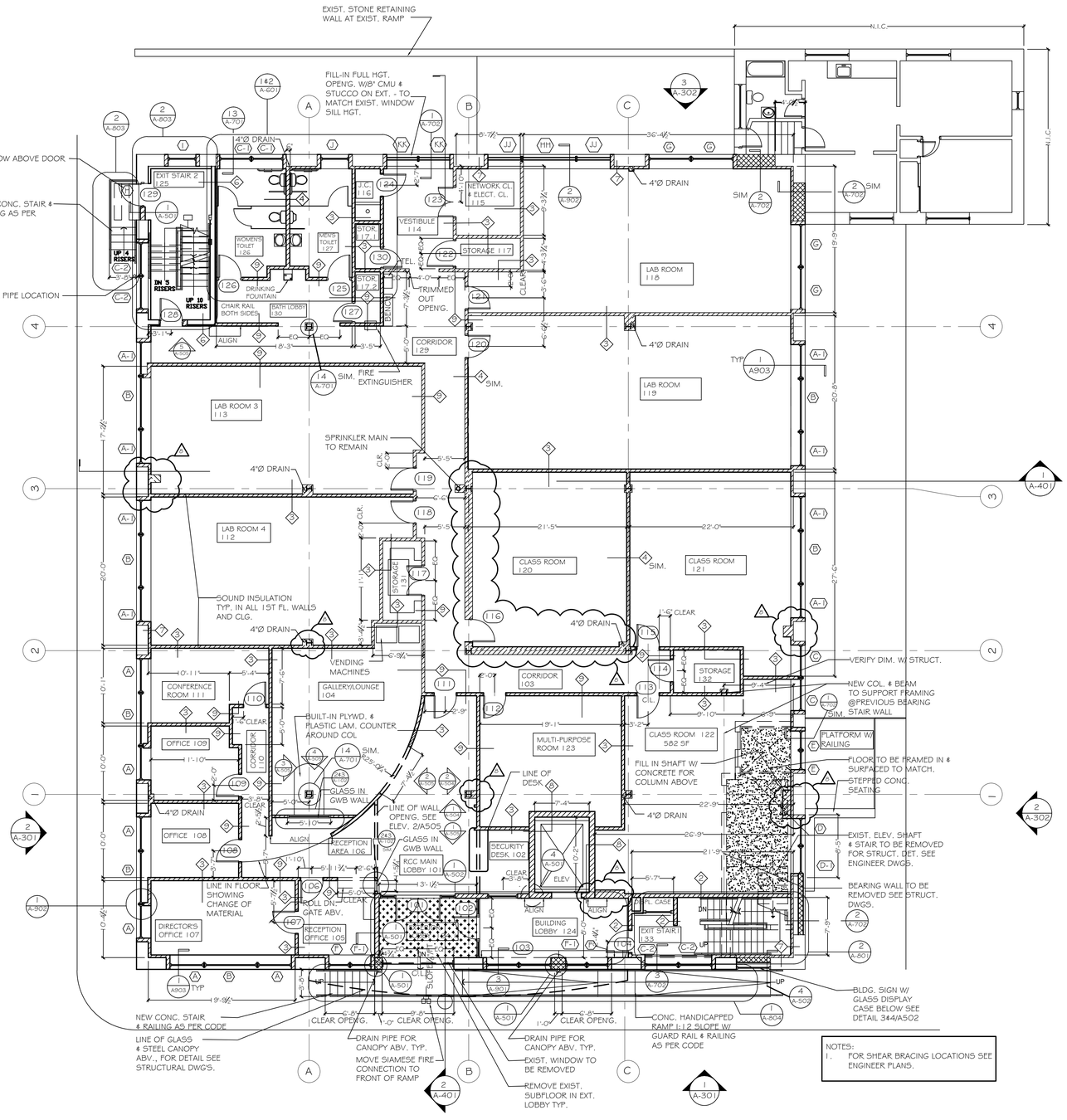

NOTES:
1. FOR SHEAR BRACING LOCATIONS SEE ENGINEER PLANS.

1 FIRST FLOOR PLAN
1/8" = 1'-0"

NOTES

1. CLASSROOMS, LABS, HALLWAYS, OFFICES, CONFERENCE ROOM, MULTI-PURPOSE ROOM, LOUNGE, SECURITY AREA TO RECIEVE ACCOUSTICAL TILE.

2. RCC LOBBY, BATHROOMS, STORAGE CLOSETS, JANITOR CLOSET TO RECIEVE GWB. CLG.

NOTES

1. EXIST. FINISHED FLOOR TO BE REMOVED. ONLY 3/4" DIAGONAL SUBFL. TO REMAIN. 5/8" T&G PLYWD. SCREWED AND GLUED TO BE APPLIED TO EXIST. SUBFL.. THIS IS TYP. FOR FIRST FLOOR ONLY. EXCEPT FOR EXTERIOR LOBBY ON FIRST FLOOR, THERE REMOVE EXIST. SUBFL. AS WELL TO BE REPLACED W/ONE LAYER OF ACX 3/4" PLYWD.

2. ALL WALLS AND ENTIRE CEILING OF FIRST FLOOR TO RECEIVE SOUND ATTENUATION INSULATION TYP. FOR COLLEGE ONLY.

3. ALL STL. LINTELS THAT REMAIN SHOULD BE SANDBLASTED IF RUSTY AND BITUMEN PAINT SHOULD BE APPLIED TO GUARD AGIANST FURTHER RUSTING.

4. ALL MASONRY STONE THAT WILL BE REMOVED DUE TO DEMOLITION SHOULD BE REMOVED CAREFULLY & SHOULD BE KEPT AND PROTECTED TO BE USED ON FACADE REPAIR ETC.

5. ALL EXT. WALLS TO BE FURRED OUT AND INSULATED R-15 TYP. FOR ALL FLOORS, EXCEPT BASEMENT NOT FURRED OUT.

6. ALL DIMENSIONS ARE GIVEN FIN. WALL TO FIN. WALL UNLESS OTHERWISE NOTED. ALL DIMENSIONS GO TO EXIST'G EXT. WALL, NOT FURRED OUT PORTION.

7. WHEN PLACING ELEVATOR SHAFT, IT IS CRITICAL THAT THE SHAFT BE PLACED SO THAT CLEAR LOBBY DIMENSION WILL BE 8'-0".

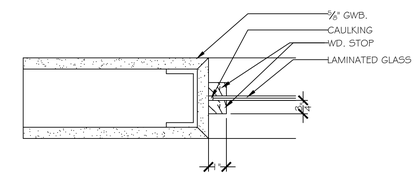

2 DETAIL PLAN VIEW @ GLASS
3" = 1'-0"

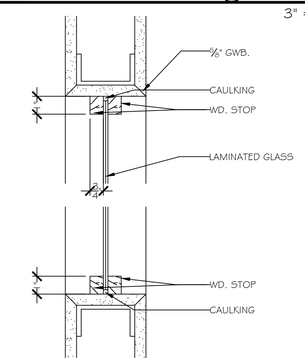

3 DETAIL SECTION @ GLASS
3" = 1'-0"

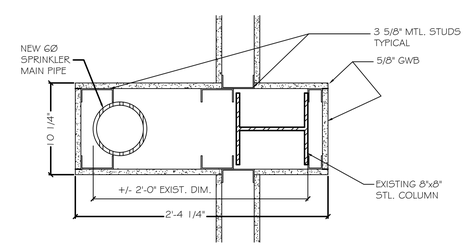

5 DETAIL @ SPRINKLER MAIN
1 1/2" = 1'-0"

Stone Building
Proposed Renovation
31 West Broad Street
Haverstraw, New York

H&H Renovations,LLC
245 Saw Mill River Rd.
Hawthorne, NY

Village of Haverstraw
County of Rockland
State of New York

Edward M. Weinstein
Architecture & Planning, P.C.

14 Spring Street
Hastings-on-Hudson, NY 10706
(914) 478-0800 FAX (914) 478-7287

© 2002 Edward M. Weinstein
Architecture & Planning, P.C.

WARNING!
IT IS A VIOLATION OF THE LAW FOR ANY PERSON, UNLESS, ACTING UNDER THE DIRECTION OF A LICENSED ARCHITECT, TO ALTER THIS DOCUMENT IN ANY WAY.

No.	Date	Revision
8	09-27-05	AS BUILT

Dwg. title: 1St Floor Plan

Proj. no: 04530
Scale: as shown
Drawn by: vhd
Chkd. by: EMW
Date: 27 Decl '04
Dwg. no. A102