PROPOSED BUILDING EXPANSION

FOR

ECODEVELOPMENTS 2015 INC.

Location: 301 CROFT DRIVE, LAKESHORE, ONTARIO

LIST OF DRAWINGS

CIVIL / LANDSCAPING

C1.1 SITE PLAN
C1.2 SITE SERVICING AND LOT GRADING PLAN
C1.3 SITE DETAILS

ARCHITECTURAL

A1.1 FLOOR PLANS AND WALL TYPES
A1.2 REFLECTED CEILING PLAN, DOOR SCHEDULE AND WASHROOM DETAILS
A2.1 ROOF PLAN AND DETAILS
A3.1 BUILDING ELEVATIONS
A4.1 BUILDING SECTIONS AND DETAILS

STRUCTURAL

S1.1 FOUNDATION PLANS AND DETAILS
S2.1 ROOF FRAMING PLANS AND STEEL FRAMING ELEVATIONS
S3.1 LOADING DOCK SECTIONS AND FRAMING DETAILS

MECHANICAL

M1.1 PLUMBING AND HVAC PLANS AND SCHEDULES

ITEM	ONTARIO 2006 BUILDING CODE DATA MATRIX PARTS 3 or 9				OBC Reference References are to Division B unless noted [A] for Division A or [C] for Division C	
1	PROJECT DESCRIPTION	☒ NEW ☐ ADDITION ☐ CHANGE OF USE ☐ ALTERATION	☐ PART 11 11.1 to 11.4		☒ PART 3 1.1.2.[A]	☐ PART 9 1.1.2.[A] & 9.10.1.3
2	MAJOR OCCUPANCY(S)	BUSINESS AND PERSONAL USE (D) / INDUSTRIAL (F3)			3.1.2.1.(1)	9.10.2
3	BUILDING AREA (m2)	EXISTING: 1,006	NEW: 551.2	NEW: 1,557.2	1.4.1.2.[A]	1.4.1.2.[A]
4	GROSS AREA (m2)	EXISTING: 1,206	NEW: 551.2	NEW: 1,757.2	1.4.1.2.[A]	1.4.1.2.[A]
5	NUMBER OF STOREYS	ABOVE GRADE TWO	BELOW GRADE ZERO		1.4.1.2.[A]&3.2.1.1.	1.4.1.2.[A]& 9.10.4
6	NUMBER OF STREETS / FIREFIGHTER ACCESS		TWO		3.2.2.10 & 3.2.5.	9.10.20.
7	BUILDING CLASSIFICATION	3.2.2.53 / 3.2.2.78			3.2.2.20. – .83	9.10.2.
8	SPRINKLER SYSTEM PROPOSED	☐ ENTIRE BUILDING ☐ SELECTED COMPARTMENTS ☐ SELECTED FLOOR AREAS ☐ BASEMENT ☐ IN LIEU OF ROOF RATING ☒ NOT REQUIRED			3.2.2.20. – .83 3.2.1.5. 3.2.2.17. INDEX	9.10.8.2. INDEX
9	STANDPIPE REQUIRED	☐ YES	☒ NO		3.2.9.	N/A
10	FIRE ALARM REQUIRED	☐ YES	☒ NO		3.2.4	9.10.18.
11	WATER SERVICE – SUPPLY IS ADEQUATE	☒ YES	☐ NO		3.2.5.7.	N/A
12	HIGH BUILDING	☐ YES	☒ NO		3.2.6	N/A
13	CONSTRUCTION RESTRICTIONS ACTUAL CONSTRUCTION	☐ COMBUSTIBLE PERMITTED ☐ COMBUSTIBLE	☐ NON–COMBUSTIBLE REQUIRED ☒ NON–COMBUSTIBLE	☒ BOTH ☐ BOTH	3.2.2.20. – .83	9.10.6
14	MEZZANINE(S) AREA (m2)	N/A			3.2.1.1.(3)–(8)	9.10.4.1
15	OCCUPANT LOAD BASED ON SUITE 100 (BUSINESS AND PERSONAL SERVICE) – 18 SUITE 200/500 (INDUSTRIAL) – 18 SUITE 300 (INDUSTRIAL) – 9 SUITE 400 (INDUSTRIAL) – 9 SUITE 600 (INDUSTRIAL) – 9 TOTAL OCCUPANT LOAD 63	☐ m2 PER PERSON	☒ DESIGN OF BUILDING		3.1.17.1	9.9.1.3
16	BARRIER FREE DESIGN	☒ YES	☐ NO (EXPLAIN)		3.8	9.5.2
17	HAZARDOUS SUBSTANCES	☐ YES	☒ NO		3.3.1.2. &3.3.1.19.	9.10.1.3.(4)
18	REQUIRED FIRE RESISTANCE RATING (FRR)	HORIZONTAL ASSEMBLIES FRR (HOURS)	LISTED DESIGN NO: OR DESCRIPTION (SB–2)		3.2.2.20. – .83 & 3.2.1.4.	9.10.8 9.10.9
		FLOORS	–			
		ROOF	–			
		MEZZANINE	–			
		FRR OF SUPPORTING MEMBERS	LISTED DESIGN NO: OR DESCRIPTION (SB–2)			
		FLOORS	–			
		ROOF	–			
		MEZZANINE	–			

19 SPATIAL SEPARATION – CONSTRUCTION OF EXTERIOR WALL — 3.2.3 — 9.10.14

WALL	AREA OF EBF(m2)	L.D. (m)	L/H or H/L	PERMITTED MAX. % of OPENINGS	PROPOSED % of OPENINGS	FRR (HOURS)	LISTED DESIGN OR DESCRIPTION	COMBUSTIBLE CONSTR.	COMBUSTIBLE CLADDING	NOTE:
SUITE 500 EXPANSION										
NORTH	105	>12	2.6	100	0	N/A		☐ YES ☒ NO	☐ YES ☒ NO	NOTE X
SOUTH	106	>12	2.6	100	0	N/A		☐ YES ☒ NO	☐ YES ☒ NO	
EAST	105	7.5	2.7	46	16.8	1	8" CONC. BLOCK/ W655 MTL. PANEL	☐ YES ☒ NO	☐ YES ☒ NO	
SUITE 600 ADDITION										
SOUTH	106	11.8	2.7	99	0	1	8" CONC. BLOCK/ W655 MTL. PANEL	☐ YES ☒ NO	☐ YES ☒ NO	
EAST	103	>12	2.6	100	32.4	N/A		☐ YES ☒ NO	☐ YES ☒ NO	
WEST	103	>12	2.6	100	8	N/A		☐ YES ☒ NO	☐ YES ☒ NO	

NOTE:

20 PLUMBING FACILITIES — 3.7 — N/A

SUITE 200/500 EXPANSION — PER 3.7.4.9 PLUMBING FIXTURES FOR INDUSTRIAL

OCCUPANT LOAD	MEN 9	WOMEN 9
REQUIRED FACILITIES	MEN 1	WOMEN 1
PROVIDED FACILITIES	MEN 1 EXISTING	WOMEN 1 EXISTING

SUITE 600 ADDITION — PER 3.7.4.9 PLUMBING FIXTURES FOR INDUSTRIAL, LESS THAN 300sm

OCCUPANT LOAD	LESS THAN 10
REQUIRED FACILITIES	1
PROVIDED FACILITIES	1 UNIVERSAL WASHROOM

CIVIL - STRUCTURAL - MECH ENGINEER

d.c. mccloskey engineering ltd.
200–5745 wyandotte street east, windsor, ontario n8s 1m6 tel (519) 977 6800

05/05/17	BUILDING PERMIT
date	Issued for:

PART OF LOT 4
CONCESSION EAST of PIKE CREEK
GEOGRAPHIC TOWNSHIP OF MAIDSTONE
NOW IN THE
TOWN OF LAKESHORE
COUNTY OF ESSEX, ONTARIO

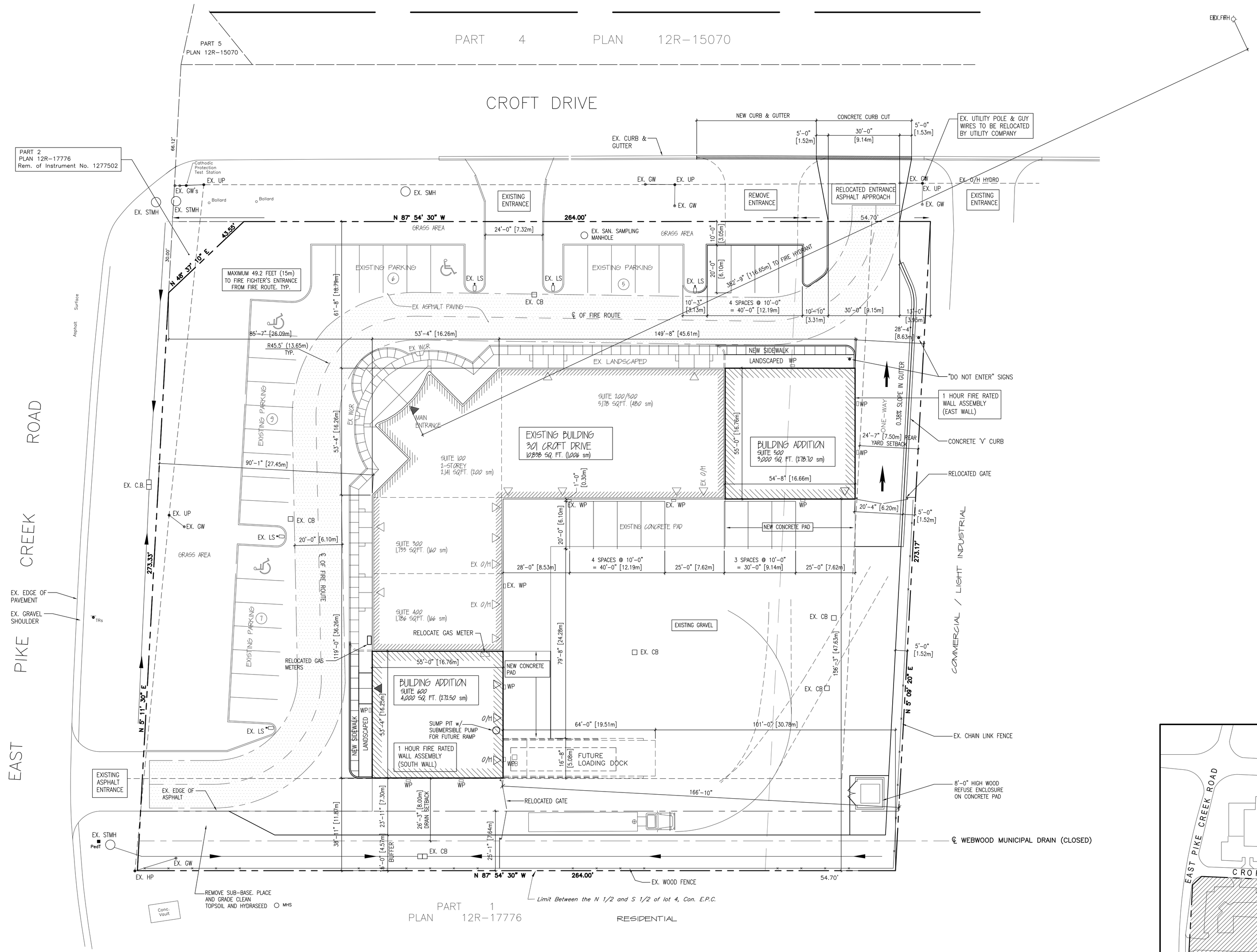

SITE PLAN
SCALE : 1" = 20'-0"

0 5 10 20 30 60 FEET

SITE STATISTICS:

ZONING	MU-1
OFFICIAL PLAN	MIXED USE
BUILDING CLASSIFICATION	F3
SITE DATA	
TOTAL SITE AREA	86,527 sf
BUILDING AREA	
EXISTING	10,838 sf
FIRST FLOOR	10,838 sf
SECOND FLOOR	(2,150 sf)
ADDITION (SUITE 5)	3,000 sf
ADDITION (SUITE 6)	2,933 sf
TOTAL BUILDING AREA	**16,771 sf**
GROSS FLOOR AREA	**(18,921 sf)**

SITE STANDARDS	EXISTING	PROPOSED
BUILDING LOT COVERAGE	12.5%	**19.4%**
PARKING/PAVED AREA	–	**48,556 sf (56.1%)**
LANDSCAPED/OPEN SPACE	–	**21,200 sf (24.5%)**
LINEAR CURBING	– ft	**– ft**

ALLOWABLE BUILDING HEIGHT	34.44 ft (10.5 m)
EXISTING HEIGHT (WAREHOUSE)	**20.66 ft (EXISTING TO REMAIN)**
EXISTING HEIGHT (OFFICE)	**22.66 ft (EXISTING TO REMAIN)**

PARKING REQUIRED

FOR LIGHT INDUSTRIAL : 1 PER 95 sm FOR 1st 2,000 sm
+ 1 PER 450 sm OVER 2,000 sm
1,206sm EXISTING BUILDING = 13
558sm BUILDING ADDITION = 6

TOTAL PARKING REQUIRED (INCLUDING HANDICAP)	19 SPACES
PARKING PROVIDED (3.0x6.0)	
EXISTING	27 SPACES
NEW	11 SPACES
TOTAL PARKING PROVIDED (INCLUDING HANDICAP)	**38 SPACES**
HANDICAP SPACES	
26–99 SPACES REQUIRES 2 BARRIER FREE SPACES	
BARRIER FREE PARKING PROVIDED	3 SPACES (EXISTING TO REMAIN)
LOADING SPACES (3.0x13.5x4.5 high)	
EXISTING	3 SPACES
NEW	2 SPACES
LOADING SPACES PROVIDED	5 SPACES

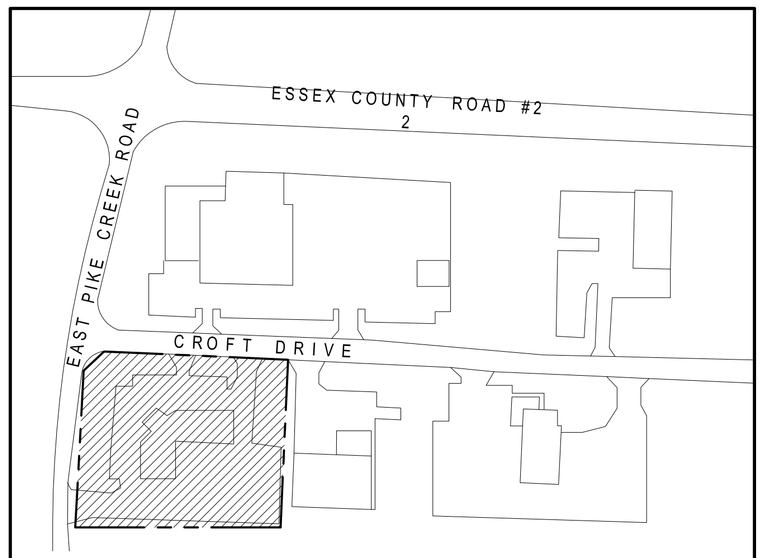

KEY PLAN
SCALE : 1" = 20'-0"

d.c. mccloskey engineering ltd.
200-5745 wyandotte st. e. windsor, ontario n8x 1m6 phone (519) 977 6800

general notes:

1. THIS PRINT IS AN INSTRUMENT OF SERVICE ONLY AND IS THE PROPERTY OF THE ENGINEER.
2. DRAWINGS SHALL NOT BE SCALED.
3. CONTRACTORS SHALL VERIFY AND BE RESPONSIBLE FOR ALL DIMENSIONS AND CONDITIONS ON THE JOB AND THIS OFFICE MUST BE NOTIFIED OF ANY VARIATIONS FROM THE DIMENSIONS AND CONDITIONS SHOWN BY THESE DRAWINGS.
4. ATTENTION IS DIRECTED TO PROVISIONS IN THE GENERAL CONDITIONS REGARDING CONTRACTOR'S RESPONSIBILITIES IN REGARDS TO SUBMISSION OF SHOP DRAWINGS.
5. IN THE EVENT THE DESIGNER IS RETAINED TO REVIEW SHOP DRAWINGS, SUCH REVIEW IS ONLY TO CHECK FOR CONFORMANCE WITH DESIGN CONCEPT AND WITH THE INFORMATION GIVEN IN THE CONTRACT DOCUMENTS
6. CONTRACTORS SHALL PROMPTLY NOTIFY THE DESIGNER IN WRITING OF THE EXISTENCE OF ANY OBSERVED VARIATIONS BETWEEN THE CONTRACT DOCUMENTS AND ANY APPLICABLE CODES OR BY-LAWS
7. THE DESIGNER IS NOT RESPONSIBLE FOR THE CONTRACTOR'S MEANS, METHODS AND OR TECHNIQUES IN THE CONSTRUCTION OF THIS FACILITY.

DETAIL NUMBER
LOCATION SHEET | DETAIL SHEET

DATE (dd/mm/yy)	ISSUED FOR
08/02/17	PRE–CONSULTATION
12/04/17	SITE PLAN AMENDMENT
05/05/17	BUILDING PERMIT

PROJECT

PROPOSED BUILDING EXPANSION

301 CROFT DRIVE
LAKESHORE, ONTARIO

CLIENT

ECODEVELOPMENTS 2015 INC.

DRAWING TITLE

SITE PLAN

DATE :	FEB 2017
SCALE :	AS NOTED
DRAWN BY :	JLD
CHECKED BY :	DCM
PROJECT FILE NO.	M17–103
DRAWING NO.	C1.1

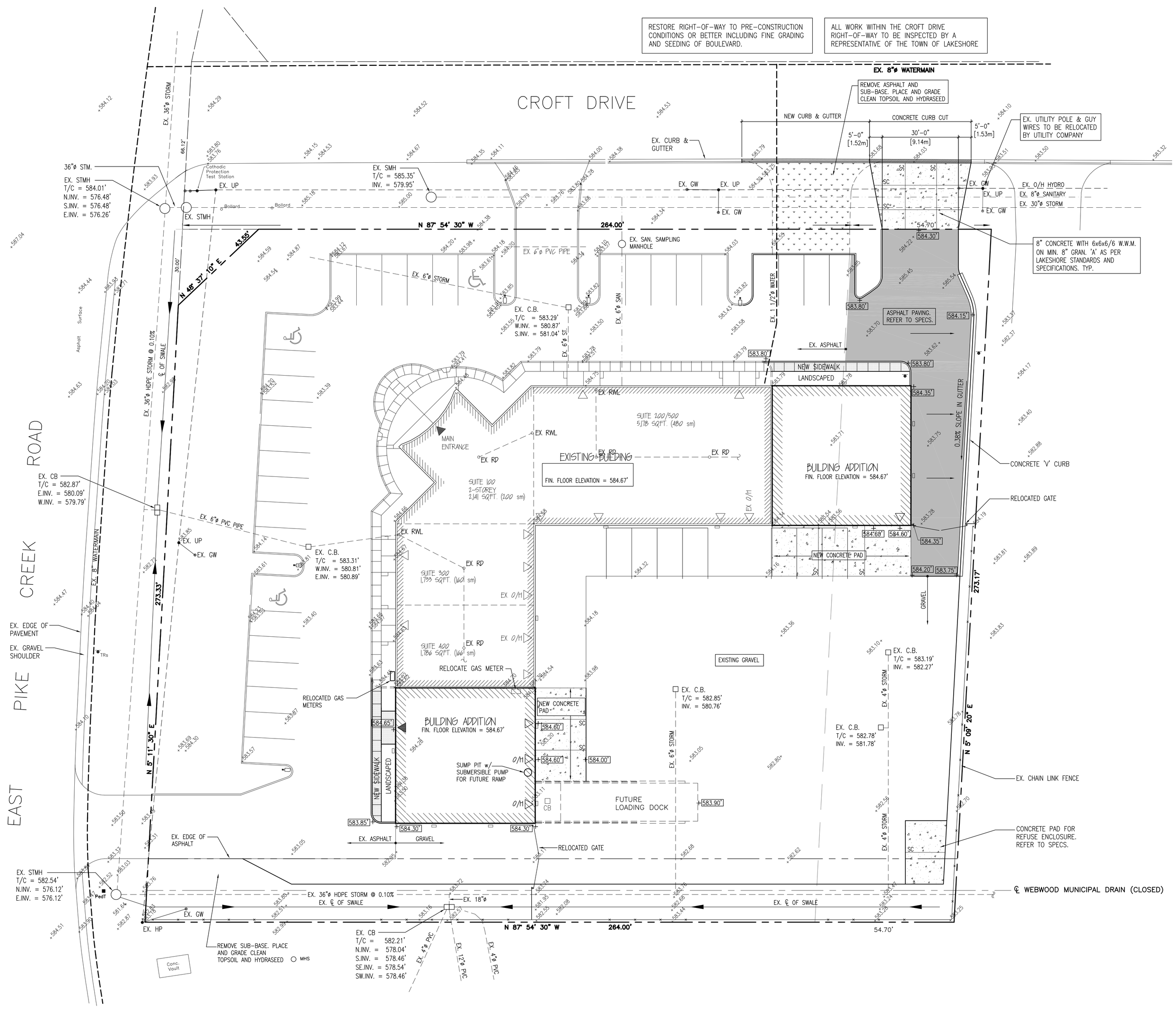

SITE SERVICING AND LOT GRADING PLAN

SCALE : 1" = 20'-0"

0 5 10 20 30 60 FEET

SITE NOTES:

AFTER EXCAVATION TO PROPER GRADE, PROOF ROLL EXISTING SUBGRADE AND FOLLOW IMMEDIATELY WITH PLACEMENT OF GRANULAR BASE UPON APPROVAL OF GEOTECHNICAL ENGINEER.

ALL WORK TO COMPLY WITH THE LOCAL BYLAWS. ALL WORK TO BE PERFORMED IN ACCORDANCE WITH THE LATEST EDITION OF THE OCCUPATIONAL HEALTH AND SAFETY AND REGULATIONS FOR CONSTRUCTION PROJECTS.

THE OWNER, ENGINEER AND THE LOCAL MUNICIPALITY AND ITS AGENTS DO NOT GUARANTEE THE ACCURACY OF THE UTILITIES SHOWN ON THE DRAWINGS. OTHER UTILITIES MAY BE PRESENT OR UTILITIES MAY DIFFER IN SIZE OR LOCATION SHOWN. THE CONTRACTOR ASSUMES FULL RESPONSIBILITY TO CONTACT THE VARIOUS UTILITY COMPANIES PRIOR TO CONSTRUCTION TO LOCATE ALL UNDERGROUND UTILITIES. THE CONTRACTOR SHALL ALSO BE RESPONSIBLE TO REPAIR ANY DAMAGE THAT HE MAY CAUSE TO THESE UTILITIES. THE CONTRACTOR FURTHER AGREES TO INDEMNIFY THE OWNER AND ENGINEER AGAINST ANY CLAIMS WHICH MAY ARISE FROM HIS ACTIONS.

THE CONTRACTOR SHALL BE RESPONSIBLE FOR OBTAINING AND PAYING FOR ALL PERMITS AND INSPECTIONS REQUIRED FOR THIS WORK.

FIELD CHECK ALL EXISTING GRADE AND DIMENSIONS PRIOR TO COMMENCING ANY NEW CONSTRUCTION. NOTIFY ENGINEER OF ANY DISCREPANCIES.

REMOVE ALL DEBRIS INCLUDING EXCAVATED MATERIALS, BROKEN CONCRETE ETC. FROM THE SITE.

BACKFILL ALL EXCAVATIONS BELOW PAVEMENT WITH FULL DEPTH GRANULAR MATERIAL COMPACTED TO MINIMUM 100% SPMDD. GRANULAR 'A' BASE SHALL BE A MINIMUM OF 12" THICK UNLESS NOTED OTHERWISE.

ALL GRANULAR BASE ELEVATIONS BELOW CONCRETE SLABS TO AT A LEVEL WITHIN 3/8" OF THE DESIGN ELEVATION.

ALL EXTERIOR CONCRETE TO BE 32 MPA CITY MIX WITH 6% + 1.1/2% AIR ENTRAINMENT.

ALL PARKING LOT LINES TO BE PAINTED BY CONTRACTOR PARKING LOT MARKINGS DISTURBED BY CONSTRUCTION TO BE RE-PAINTED. REFER TO SITE PLAN FOR ALL PAVEMENT MARKINGS AND TRAFFIC SIGNAGE.

CONCRETE PADS TO BE 8" THK., 30 MPa, AIR ENTRAINED CONCRETE w/ 6x6x6/6 W.W.M. ON MIN. 12" GRAN. A COMPACTED TO 100% SPMDD

SIDEWALKS ON PRIVATE PROPERTY TO BE 4" THK., 32 MPa. (CITY MIX) CONC. w/ 6x6x6/6 W.W.M. ON MINIMUM (6" CLEARSTONE ON MIN. 4" COMP. GRAN. 'A') (10" COMP. GRAN. 'A'). INSTALL 1/2" EXPANSION JOINTS w/ DECK-O-FOAM (BY W.R. MEADOWS OR EQUIV.) EXPANSION JOINT FILLER WATERPROOFED w/ SEALANT AT 20'-0" O.C. AND 1/4" x 2" DP. SAWCUTS @ 5'-0" O.C.

SUPPLY AND INSTALL 2", 20 psi RIGID INSULATION UNDER SIDEWALK AT ALL DOOR LOCATIONS. EXTEND 48" FROM FOUNDATION WALL AND 48" EACH SIDE OF DOOR.

ALL EXPOSED CONCRETE SURFACES TO BE COATED WITH A WHITE PIGMENTED CONCRETE CURING COMPOUND (SEALTIGHT WP-45) CURE ALL SITE PLACED CONCRETE.

PROVIDE SAWCUT JOINTS IN CURB AT 10' ON CENTER. FILL JOINTS WITH JOINT FILLER. VERIFY JOINT LOCATION WITH ENGINEER. PROVIDE 1/2" EXPANSION JOINTS w/ DECK-O-FOAM (BY W.R. MEADOWS OR EQUIV.) EXPANSION JOINT FILLER WATERPROOFED w/ SEALANT AT 20'-0" O.C.

GRANULAR 'A' TO OPSS 1010

ASPHALT PAVING TO CONSIST OF A BASE COURSE OF HL4 AND A SURFACE COURSE OF HL3 MEETING THE REQUIREMENTS OF THE APPROPRIATE ONTARIO PROVINCIAL STANDARDS SPECIFICATIONS THICKNESS TO BE AS NOTED ON THE DRAWINGS.

ASPHALT PAVING TO BE 1.1/2" HL3 ON 2" HL4 ON MINIMUM 14" GRAN. 'A' COMPACTED TO 100% SPMDD

SEWER NOTES

CAMERA ALL SEWERS AND SUBMIT COPIES TO THE PROJECT ENGINEER.

ALL SEWERS TO BE PRESSURE AIR OR WATER TESTED AND THE RESULTS SUBMITTED TO THE PROJECT ENGINEER.

ALL ORIFICE RESTRICTOR PLATES TO BE PLACED ON THE DISCHARGE PIPE UNLESS NOTED.

BRASS COVER PLATES TO BE USED ON ALL CLEANOUTS LOCATED IN PAVEMENT.

STORM SEWER PIPING TO BE PVC (SMOOTH WALL CSA B182.2 DR35 (PIPE SIZES 4" – 24") OR HDPE (ANNULAR PROFILE PIPE – CSA B182.8)(PIPE SIZES 8" – 36")

ALL CATCHBASIN LEADS TO BE 8"ø PIPE UNLESS NOTED OTHERWISE.

CATCH BASINS (C.B.) TO HAVE THREE-4"ø BY 10ft LONG PERFORATED STUB DRAINS INTO GRANULAR BACKFILL. STUB DRAINS INVERT TO BE 18" BELOW FIN. GRADE. CATCH BASINS TO BE 24" X 24" PRECAST CONCRETE WITH FRAME AND GRATE AND GOSS TRAP TO OPSD. #705.02. ALL CATCH BASINS SHALL HAVE A MIN. 24" DEEP SUMP BELOW THE OUTLET PIPE.

LEGEND

ADJ	TO BE ADJUSTED	SMH	SANITARY SEWER MANHOLE
BC	BOTTOM OF CURB	ST	STORM SEWER
BP	BELL PEDESTAL	STMH	STORM SEWER MANHOLE
BOL	BOLLARD	TC	TOP OF CURB
CB	CATCH BASIN	T/C	TOP OF COVER
CBMH	CATCH BASIN MANHOLE	TL	TRAFFIC LIGHT
C.O.	CLEAN OUT	TMH	TRAFFIC MANHOLE
CSP	CORRUGATED STEEL PIPE	TRMH	TRAFFIC SIGNAL ELECTRICAL MANHOLE
CS	CURB STOP	TRC	TRAFFIC CONTROL
CTV	CABLE TELEVISION	UP	UTILITY POLE
DICB	DITCH INLET CATCH BASIN	VAC	VACUUM
DWS	DOMESTIC WATER SERVICE	VT	VENT
E/P	EDGE OF PAVEMENT	WCR	WHEELCHAIR RAMP (CURB CUT)
E/SH	EDGE OF SHOULDER	WP	WALL PACK LIGHTING
FDC	FIRE DEPARTMENT CONNECTION	WV	WATER VALVE
FH	FIRE HYDRANT	YD	YARD DRAIN
FP	FLAG POLE	+ 603.68	EXIST. GRADE
GM	GAS METER	+603.68	NEW GRADE
GW	GUY WIRE		SLOPE LINES
HP	HYDRO POLE		PRIMARY BLDG. ENTRANCE
INV	SEWER INVERT		SECONDARY BLDG. ENTRANCE
LS	LIGHT STANDARD	H	HYDRO METER
MHW	WATER MANHOLE	1	CATCHMENT AREA DESIGNATION
MW	MONITORING WELL	BF	BACKFLOW PREVENTER & CHAMBER
PIV	POST INDICATOR VALVE		OVERLAND FLOW
REL	TO BE RELOCATED		BARRIER CURB
REM	TO BE REMOVED		CURB & GUTER
RWL	RAINWATER LEADER w/ CLEANOUT		
SAN	SANITARY SEWER		

GAS LINE
BELL LINE
HYDRO LINE
SANITARY SEWER
WATER LINE
STORM SEWER
SUBDRAIN
PROPERTY LINE

SITE BENCH MARK

FINISHED FLOOR OF EXISTING BUILDING ELEVATION 584.67'

d.c. mccloskey engineering ltd.
200-5745 wyandotte st. e. windsor, ontario n8x 1m6 phone (519) 977 6800

general notes:

1. THIS PRINT IS AN INSTRUMENT OF SERVICE ONLY AND IS THE PROPERTY OF THE ENGINEER.
2. DRAWINGS SHALL NOT BE SCALED.
3. CONTRACTORS SHALL VERIFY AND BE RESPONSIBLE FOR ALL DIMENSIONS AND CONDITIONS ON THE JOB AND THIS OFFICE MUST BE NOTIFIED OF ANY VARIATIONS FROM THE DIMENSIONS AND CONDITIONS SHOWN BY THESE DRAWINGS
4. ATTENTION IS DIRECTED TO PROVISIONS IN THE GENERAL CONDITIONS REGARDING CONTRACTOR'S RESPONSIBILITIES IN REGARDS TO SUBMISSION OF SHOP DRAWINGS.
5. IN THE EVENT THE DESIGNER IS RETAINED TO REVIEW SHOP DRAWINGS, SUCH REVIEW IS ONLY TO CHECK FOR CONFORMANCE WITH DESIGN CONCEPT AND WITH THE INFORMATION GIVEN IN THE CONTRACT DOCUMENTS
6. CONTRACTORS SHALL PROMPTLY NOTIFY THE DESIGNER IN WRITING OF THE EXISTENCE OF ANY OBSERVED VARIATIONS BETWEEN THE CONTRACT DOCUMENTS AND ANY APPLICABLE CODES OR BY-LAWS
7. THE DESIGNER IS NOT RESPONSIBLE FOR THE CONTRACTOR'S MEANS, METHODS AND OR TECHNIQUES IN THE CONSTRUCTION OF THIS FACILITY.

DETAIL NUMBER
LOCATION SHEET | DETAIL SHEET

DATE (dd/mm/yy)	ISSUED FOR
08/02/17	PRE-CONSULTATION
12/04/17	SITE PLAN AMENDMENT
05/05/17	BUILDING PERMIT

PROJECT

PROPOSED BUILDING EXPANSION

301 CROFT DRIVE
LAKESHORE, ONTARIO

CLIENT

ECODEVELOPMENTS 2015 INC.

DRAWING TITLE

SITE SERVICING AND LOT GRADING PLAN

DATE :	FEB 2017
SCALE :	AS NOTED
DRAWN BY :	JLD
CHECKED BY :	DCM
PROJECT FILE NO.	M17-103
DRAWING NO.	C1.2

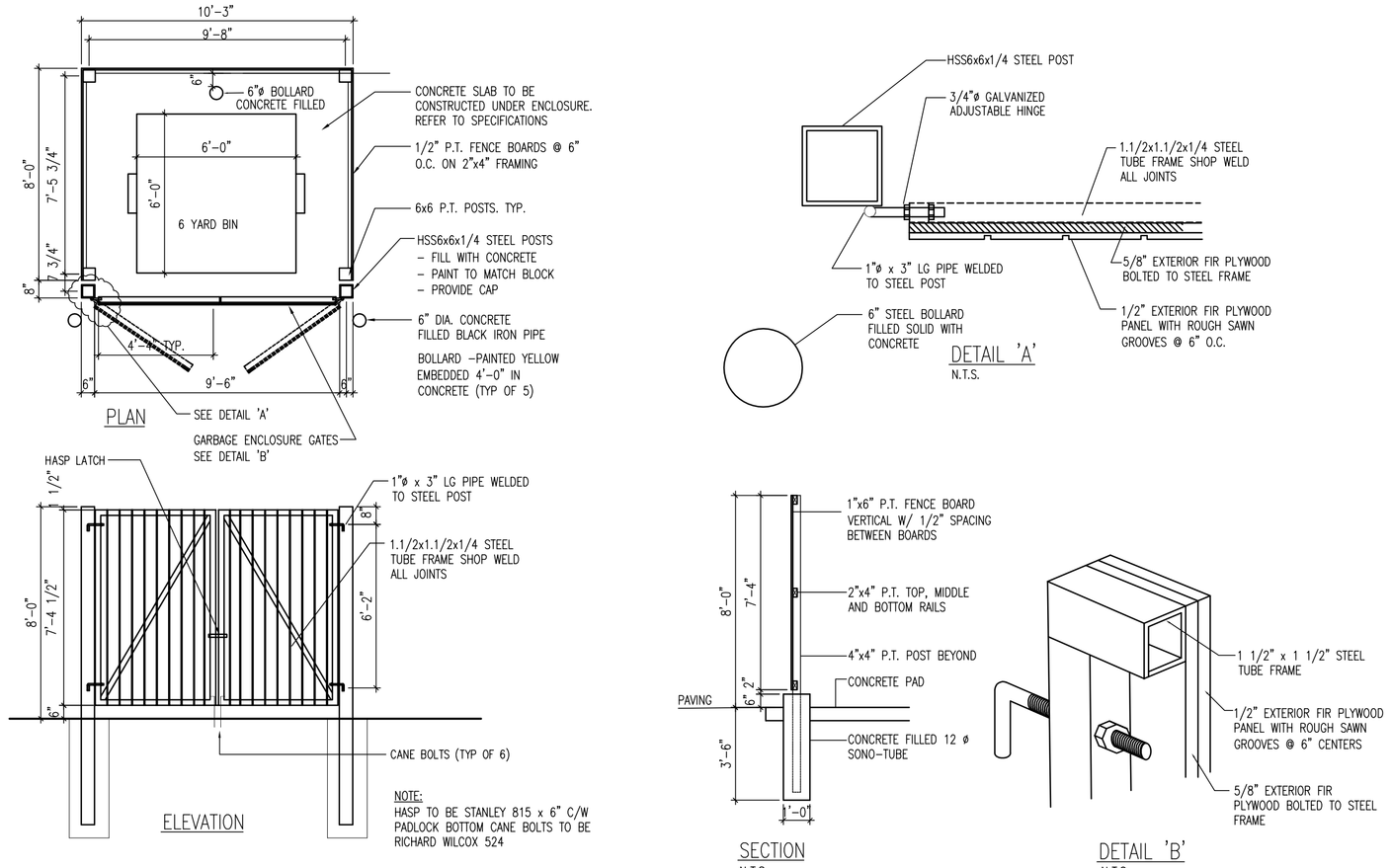

TYP. WOOD REFUSE ENCLOSURE

SCALE : 1/4" = 1'-0"

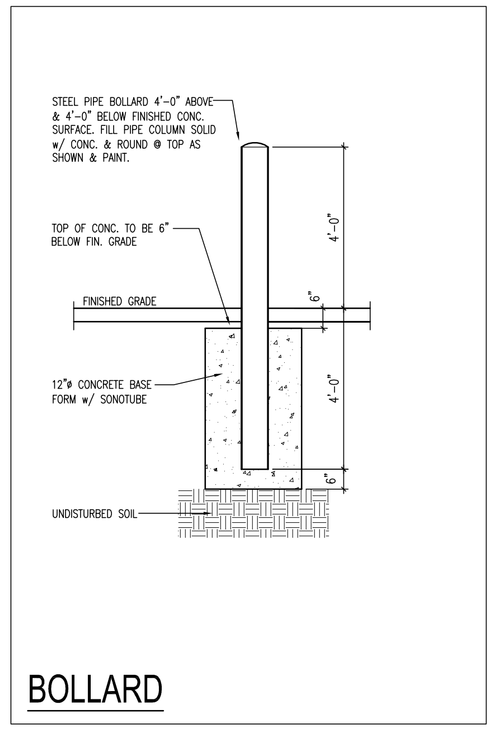

BOLLARD

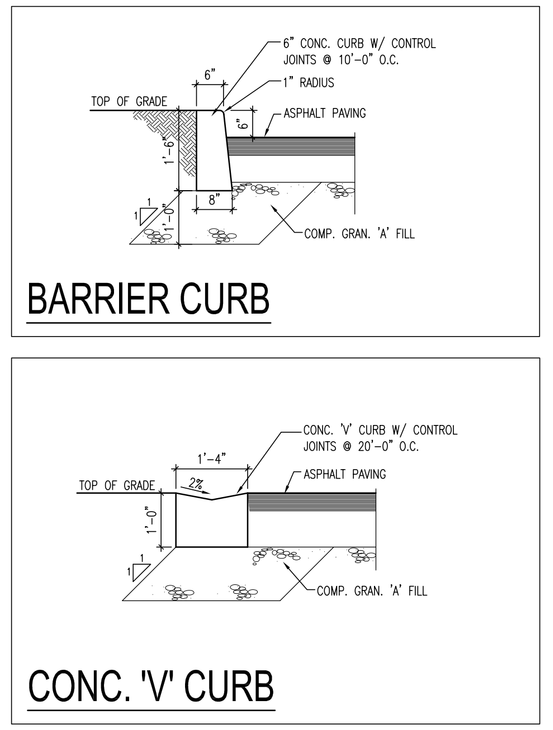

BARRIER CURB

CONC. 'V' CURB

d.c. mccloskey engineering ltd.
1880 assumption street suite 100 windsor, ontario n9y 1c4 canada
phone (519) 977 6800 fax (519) 254 3642 info@mccloskeyengineering.com

general notes:

1. THIS PRINT IS AN INSTRUMENT OF SERVICE ONLY AND IS THE PROPERTY OF THE ENGINEER.
2. DRAWINGS SHALL NOT BE SCALED.
3. CONTRACTORS SHALL VERIFY AND BE RESPONSIBLE FOR ALL DIMENSIONS AND CONDITIONS ON THE JOB AND THIS OFFICE MUST BE NOTIFIED OF ANY VARIATIONS FROM THE DIMENSIONS AND CONDITIONS SHOWN BY THESE DRAWINGS.
4. ATTENTION IS DIRECTED TO PROVISIONS IN THE GENERAL CONDITIONS REGARDING CONTRACTOR'S RESPONSIBILITIES IN REGARDS TO SUBMISSION OF SHOP DRAWINGS.
5. IN THE EVENT THE DESIGNER IS RETAINED TO REVIEW SHOP DRAWINGS, SUCH REVIEW IS ONLY TO CHECK FOR CONFORMANCE WITH DESIGN CONCEPT AND WITH THE INFORMATION GIVEN IN THE CONTRACT DOCUMENTS.
6. CONTRACTORS SHALL PROMPTLY NOTIFY THE DESIGNER IN WRITING OF THE EXISTENCE OF ANY OBSERVED VARIATIONS BETWEEN THE CONTRACT DOCUMENTS AND ANY APPLICABLE CODES OR BY-LAWS
7. THE DESIGNER IS NOT RESPONSIBLE FOR THE CONTRACTOR'S MEANS, METHODS AND OR TECHNIQUES IN THE CONSTRUCTION OF THIS FACILITY.

DETAIL NUMBER
LOCATION SHEET | DETAIL SHEET

DATE (dd/mm/yy)	ISSUED FOR
12/04/17	SITE PLAN AMENDMENT
05/05/17	BUILDING PERMIT

PROJECT

PROPOSED ADDITION TO EXISTING BUILDING

301 CROFT DRIVE
LAKESHORE, ONTARIO

CLIENT

ECODEVELOPMENTS 2015 INC.

DRAWING TITLE

SITE SERVICING DETAILS

DATE :	FEB 2017
SCALE :	AS NOTED
DRAWN BY :	JLD
CHECKED BY :	DCM
PROJECT FILE NO.	M17-103
DRAWING NO.	C1.3

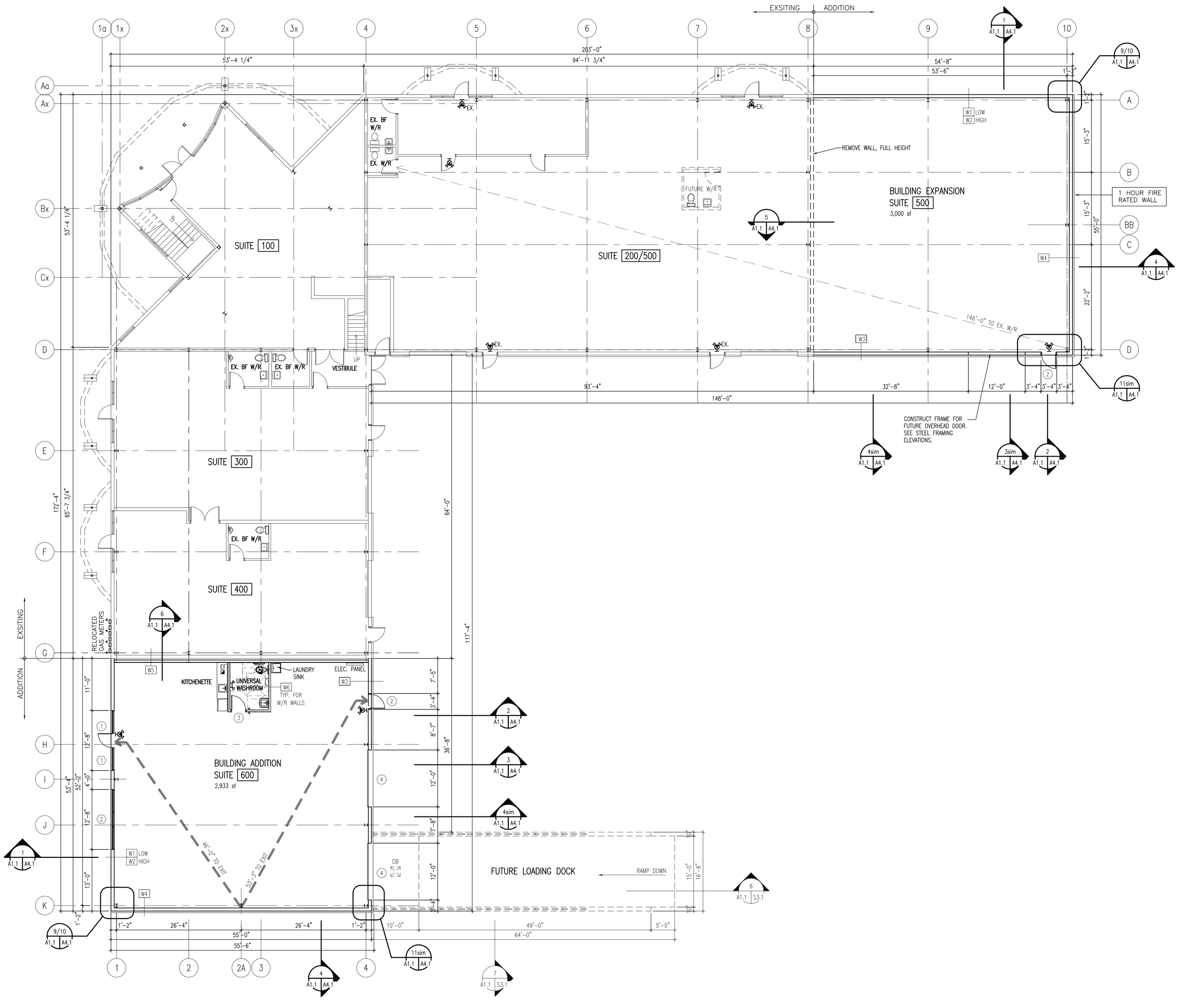

FLOOR PLAN

SCALE : 3/32" = 1'-0"

0 2 4 8 16 32 FEET

WALL TYPES:

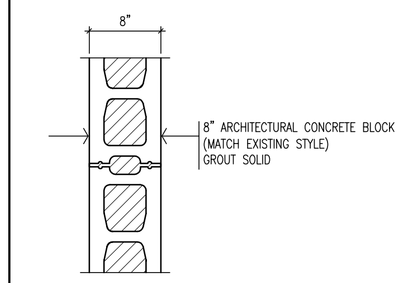

WALL TYPE W1

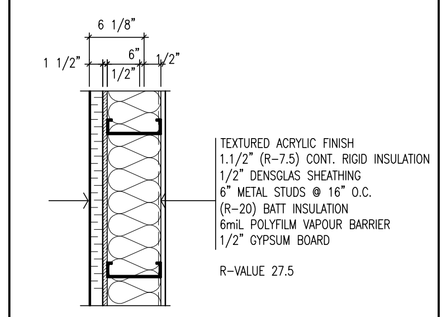

WALL TYPE W2

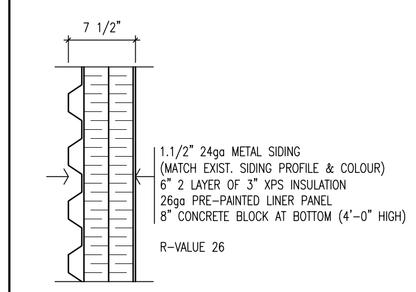

WALL TYPE W3

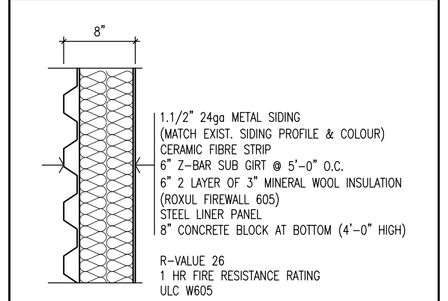

WALL TYPE W4

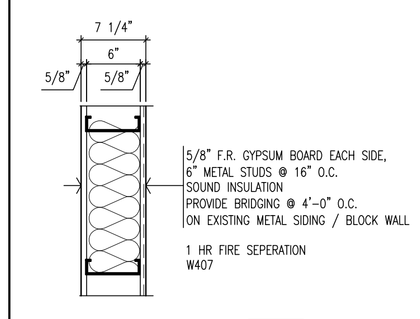

WALL TYPE W5

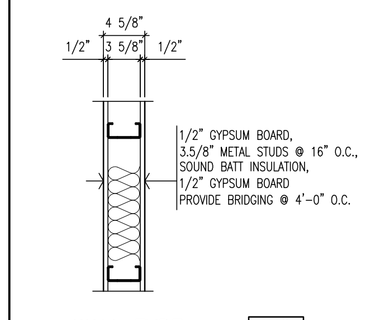

WALL TYPE W6

d.c. mccloskey engineering ltd.
200-5745 wyandotte street east, windsor, ontario n8x 1m6 tel (519) 977 6800

general notes:

1. THIS PRINT IS AN INSTRUMENT OF SERVICE ONLY AND IS THE PROPERTY OF THE ENGINEER.
2. DRAWINGS SHALL NOT BE SCALED.
3. CONTRACTORS SHALL VERIFY AND BE RESPONSIBLE FOR ALL DIMENSIONS AND CONDITIONS ON THE JOB AND THIS OFFICE MUST BE NOTIFIED OF ANY VARIATIONS FROM THE DIMENSIONS AND CONDITIONS SHOWN BY THESE DRAWINGS.
4. ATTENTION IS DIRECTED TO PROVISIONS IN THE GENERAL CONDITIONS REGARDING CONTRACTOR'S RESPONSIBILITIES IN REGARDS TO SUBMISSION OF SHOP DRAWINGS.
5. IN THE EVENT THE DESIGNER IS RETAINED TO REVIEW SHOP DRAWINGS, SUCH REVIEW IS ONLY TO CHECK FOR CONFORMANCE WITH DESIGN CONCEPT AND WITH THE INFORMATION GIVEN IN THE CONTRACT DOCUMENTS.
6. CONTRACTORS SHALL PROMPTLY NOTIFY THE DESIGNER IN WRITING OF THE EXISTENCE OF ANY OBSERVED VARIATIONS BETWEEN THE CONTRACT DOCUMENTS AND ANY APPLICABLE CODES OR BY-LAWS
7. THE DESIGNER IS NOT RESPONSIBLE FOR THE CONTRACTOR'S MEANS, METHODS AND OR TECHNIQUES IN THE CONSTRUCTION OF THIS FACILITY.

DETAIL NUMBER
LOCATION SHEET | DETAIL SHEET

DATE (dd/mm/yy)	ISSUED FOR
05/05/17	BULIDING PERMIT
–	–

PROJECT

PROPOSED BUILDING EXPANSION

301 CROFT DRIVE
LAKESHORE, ONTARIO

CLIENT

ECODEVELOPMENTS 2015 INC.

DRAWING TITLE

FLOOR PLAN AND WALL TYPES

DATE :	FEB. 2017
SCALE :	AS NOTED
DRAWN BY :	BC/JLD
CHECKED BY :	DCM
PROJECT FILE NO.	M17-103
DRAWING NO.	A1.1

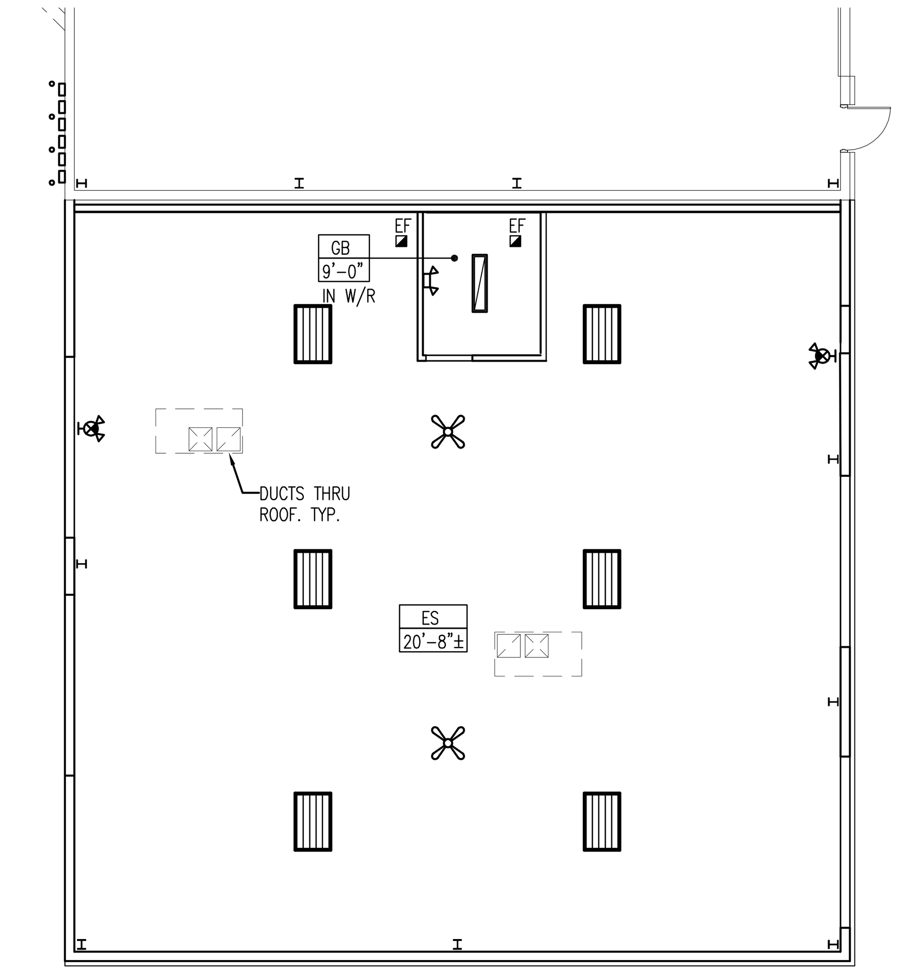

REFLECTED CEILING PLAN - SUITE 600

SCALE : 3/32" = 1'-0"

0 2 4 8 16 32 FEET

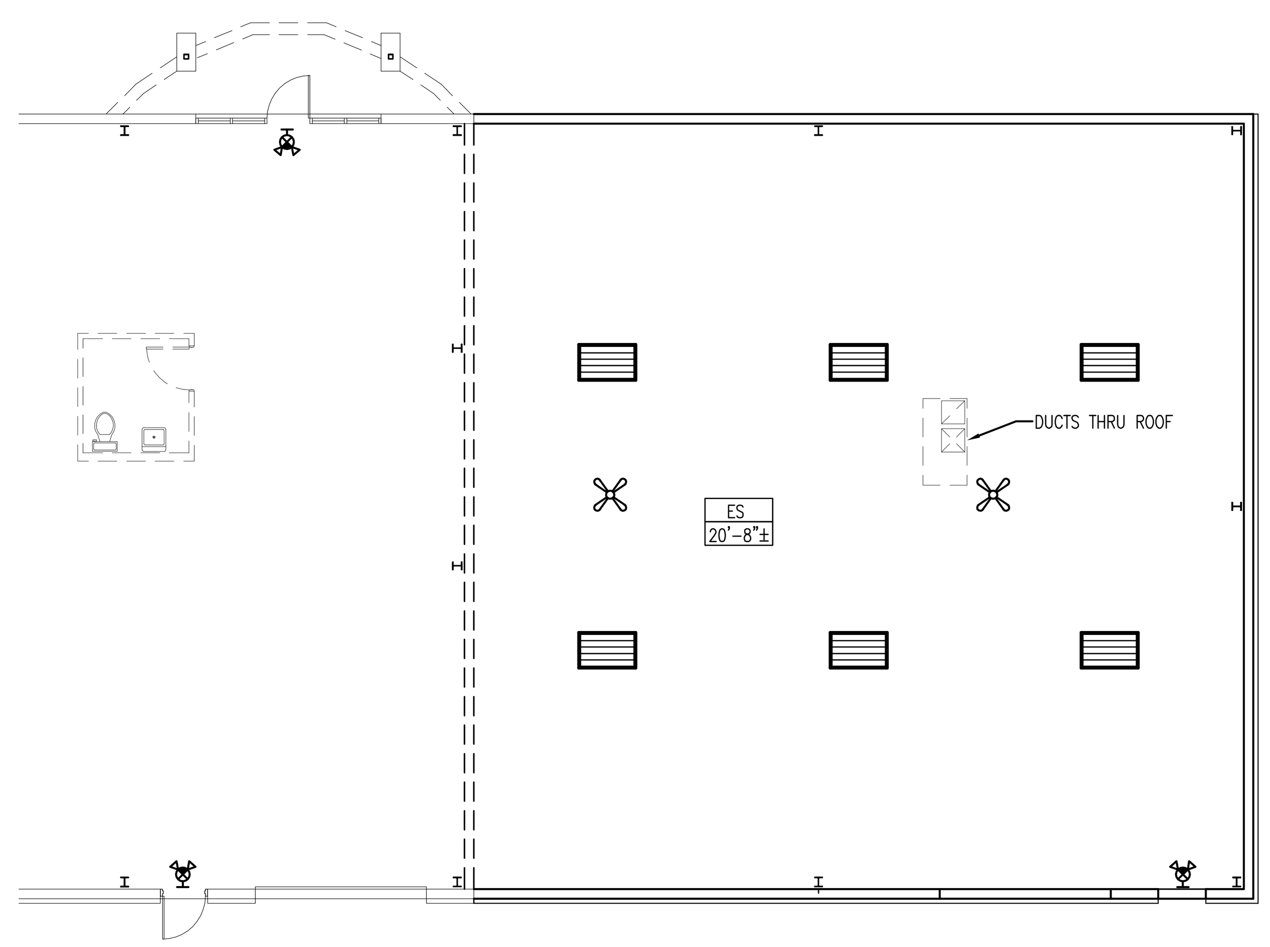

REFLECTED CEILING PLAN - SUITE 500

SCALE : 3/32" = 1'-0"

0 2 4 8 16 32 FEET

FIRE ALARM LEGEND

- WALL / CLG. MOUNTED EXIT SIGN W/ BATTERY BACK UP EMERGENCY LIGHTS
- WALL / CLG. MOUNTED EXIT SIGN W/ BATTERY BACK UP EMERGENCY LIGHTS & DIRECTIONAL ARROWS
- WALL / CLG. MOUNTED EMERGENCY LIGHTS C/W BATTERY BACK UP
- WALL / CLG. MOUNTED EMERGENCY LIGHTS REMOTE HEAD LOCATION
- F.E. FIRE EXTINGUISHER
- F.A. FIRE ALARM ANNUNCIATOR PANEL
- WALL MOUNTED FIREBELL
- WALL MOUNTED PULL STATION

* SEE ELECTRICAL DRAWINGS FOR ADDITIONAL LIFE SAFETY REQUIREMENTS

LEGEND

- 1'-0" x 4'-0" LED FIXTURE W/ ACRYLIC LENS, SURFACE MOUNTED.
- FLOURESCENT HIGHBAY FIXTURE
- EF EXHAUST FAN
- CEILING FAN
- SACT 10'-0" DENOTES CEILING MATERIAL & HEIGHT

SACT SUSPENDED ACCOUSTIC CEILING TILE
GB GYPSUM BOARD
GBB GYPSUM BOARD BULKHEAD
FRGB FIRE RATED GYPSUM BOARD
ES EXPOSED STRUCTURE

DOOR SCHEDULE

DOOR NO.	SIZE (width x height x thickness)	DOORS MATERIAL: ANOD. ALUM.	HOLLOW METAL	S.C. WOOD	STEEL	FINISH: PREFIN.	PAINTED	STAINED	ELEV.	FIRE RATING (min.)	FRAMES MATERIAL: ANOD. ALUM.	HOLLOW METAL	WOOD	STEEL	FINISH: PAINTED	STAINED	ELEV.	HARDWARE MANDOORS: LOCKSET	PRIVACY SET	PASSAGE SET	B.F. OPERATOR	ACCESS CONTROL	DEAD BOLT	LATCHING DEVICE	CLOSURE	FLOOR STOP	WALL STOP	ASTRAGAL	EMERG. REL.	PUSH/PULL	SMOKE SEAL	WEATHERSTRIP	THRESHOLD	DOOR SWEEP	DOOR GRILLE	TEMPERED GLASS	INSULATED	KICKPLATE	LITE	O/H DOORS: ELEC. OPENER	MANUAL CHAIN	REMOTE	KEYPAD	INSULATED	VISION WINDOWS	WEATHERSTRIP	SAFETY EDGE	REMARKS	QTY.
1	3'-2" x 7'-0" x 1.3/4"	●				●			2		●						–						●		●					●		●	●	●		●													1
2	3'-0" x 7'-0" x 1.3/4"		●				●		1			●			●		B	●					●		●							●	●	●			●												2
3	3'-2" x 7'-0" x 1.3/4"		●				●		1			●			●		A		●		●				●	●																						UNDERCUT 1", HOOK	1
4	12'-0" x 14'-0"				●	●			3					●	●		–																								●			●		●	●		2
																																																TOTAL	6

DOOR ADDITIONAL NOTES:

1. DOOR AND FRAME SUPPLIER SHALL PROVIDE ALL REQUIRED CLOSURE TRIM FOR ALL EXTERIOR FRAMES TO SUIT CORRESPONDING OPENINGS.
2. ALL DOORS LOCATED WITHIN A BARRIER FREE PATH OF TRAVEL SHALL BE IN ACCORDANCE TO NATIONAL BUILDING CODE
3. PROVIDE SEALANT AROUND ALL EXTERIOR DOOR FRAMES INSIDE AND OUT. SEE SPECIFICATIONS FOR SEALANT TYPES AND APPLICATION. SEALANT COLOUR TO MATCH COLOUR OF FRAMES.
4. EXTERIOR HOLLOW METAL FRAMES TO BE FACTORY GALVANIZED PRIMED, SITE PAINTED.
5. ALL FIRE RATED DOORS TO HAVE POSITIVE LATCHING MECHANISM HARDWARE IN ACCORDANCE WITH NATIONAL BUILDING CODE

WINDOW SCHEDULE

NO.	ROUGH OPENING (W x H)	FRAME	GLAZING	QTY.
1	12'-8" x 9'-4"	ANOD. ALUM., CLEAR	6mm STANDARD GREY WITH SOLARBAN 60 ON SURFACE #2, 6mm CLEAR, WARM EDGE SPACER AND ARGON FILL	1
2	12'-8" x 9'-4"			1
			TOTAL	2

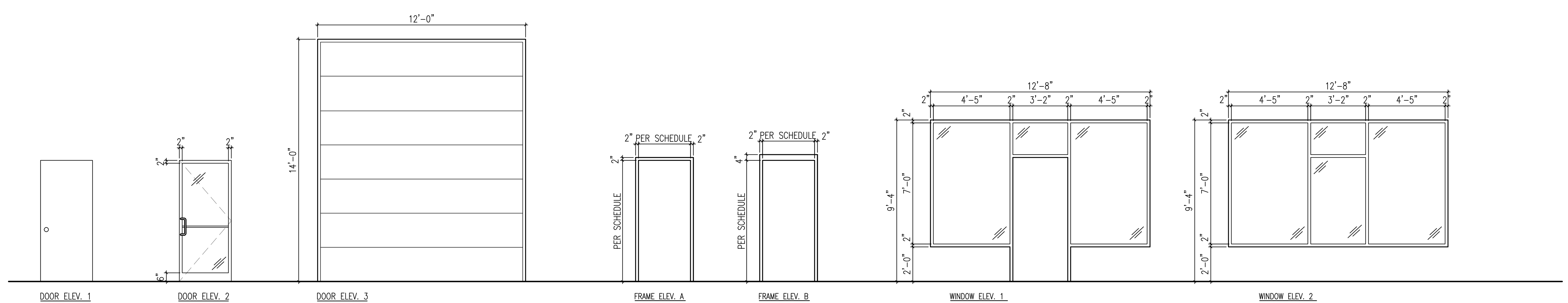

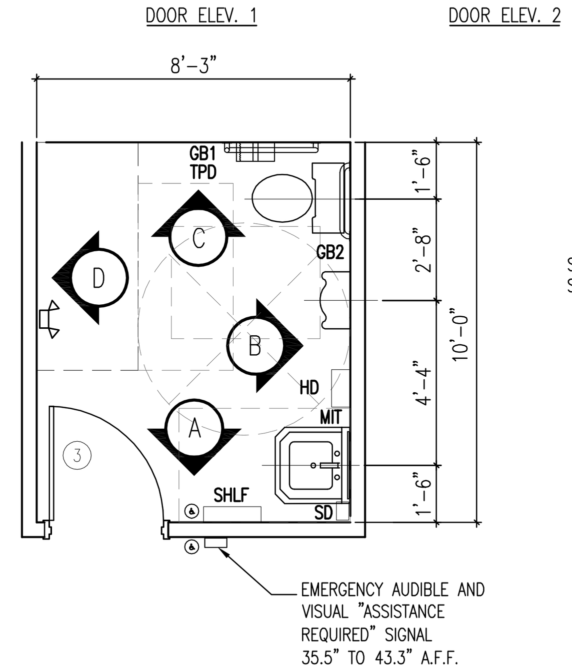

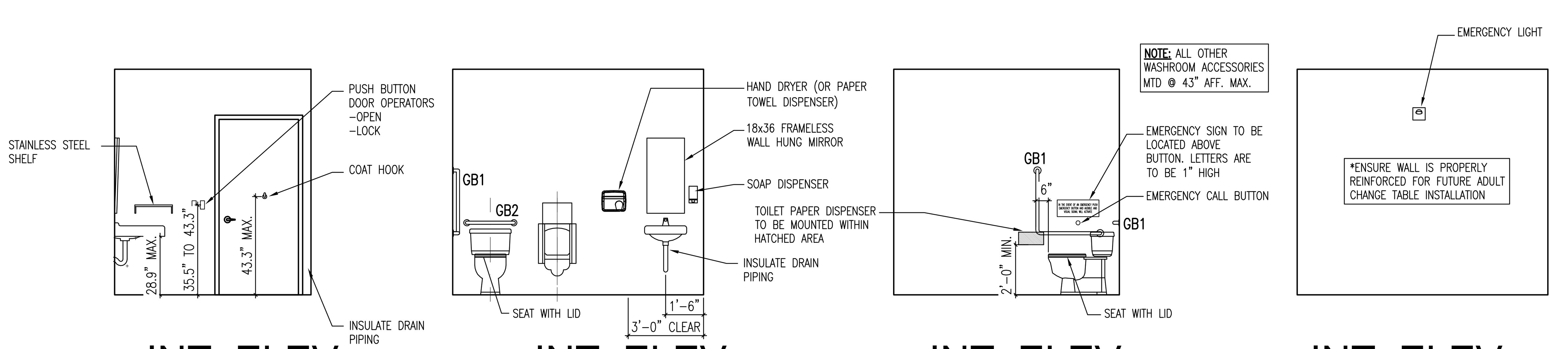

A INT. ELEV. SCALE : 1/4" = 1'-0"

B INT. ELEV. SCALE : 1/4" = 1'-0"

C INT. ELEV. SCALE : 1/4" = 1'-0"

D INT. ELEV. SCALE : 1/4" = 1'-0"

WASHROOM ACCESSORY SCHEDULE

ITEM	DESCRIPTION	QTY.	SUPPLY	INSTALL	MOUNTING INSTRUCTIONS
GRAB BAR GB1	GRAB BAR – HORIZONTAL BOBRICK – B6806.99 x 30" LONG WITH PEENED NONSLIP FINISH & CONCEALED MOUNTING WITH SNAP FLANGE	1	G.C.	G.C.	33" TO 36" A.F.F. OR 6" ABOVE TOP OF TANK
GRAB BAR GB2	GRAB BAR – L-SHAPE BOBRICK – B6806.99–L30"x30" LONG WITH PEENED NONSLIP FINISH & CONCEALED MOUNTING WITH SNAP FLANGE	1	G.C.	G.C.	HORIZONTAL COMPONENT 29.1/2" A.F.F. & VERTICAL COMPNENT IS 6" IN FRONT OF WATER CLOSET
STAINLESS STEEL SHELF SHLF	5" x 18" LONG STAINLESS STEEL SHELF, BRADLEY – 755	3	G.C.	G.C.	36" TO 47" MAX. A.F.F.
MIRROR (ADA COMPLIANT) MIT	18" x 36" FRAMELESS FIXED TILT MIRROR, BRADLEY – 740	1	G.C.	G.C.	39" A.F.F.
SOAP DISPENSER SD	TOUCH FREE SOAP DISPENSER FROST – 714-P	3	G.C.	G.C.	MAX. 47" A.F.F., MAX. 24" FROM EDGE OF LAVATORY
TOILET PAPER DISPENSER TPD	DOUBLE ROLL FROST – 150	3	G.C.	G.C.	BELOW GRAB BAR, MAX. 12" IN FRONT OF SEAT, MIN. 23.1/2" A.F.F.
HAND DRYER HD	AUTO AIR HAND DRYER FROST – 1187	3	G.C.	G.C.	36" TO 47" MAX. A.F.F.

FINISH NOTES:

1. ALL FINISHES TO BE DETERMINED BY OWNER. PRIOR TO ORDERING FINISH MATERIALS, THE CONTRACTOR SHALL SUBMIT TO THE OWNER AN ACTUAL SAMPLE OF THE MATERIAL SPECIFIED. FAILURE TO DO SO WILL RENDER THE CONTRACTOR RESPONSIBLE FOR ANY RESULTING CHANGES.
2. PROVIDE LEVER ACTION HARDWARE & FIXTURES AS REQUIRED TO MEET HANDICAPPED CODES. EVERY DOOR INSIDE AND OUTSIDE, SHALL BE PROVIDED WITH HANDICAPPED HARDWARE (LEVERS, PANIC HARDWARE, OR U-SHAPED DESIGN DEVICES, ETC.)
3. HARDWARE REQUIRED FOR ACCESSIBLE DOOR PASSAGE SHALL BE MOUNTED NO HIGHER THAN 43" ABOVE FINISHED FLOOR.
4. SINKS SHALL HAVE HANDICAPPED COMPLIANT WRIST BLADE HANDLES.
5. ALL WASHROOM ACCESSORIES TO BE APPROVED BY OWNER AND SHALL BE HANDICAPPED COMPLIANT. ALL ACCESSORIES MOUNTING HEIGHTS TO CONFORM TO THE O.B.C.
6. PROVIDE WOOD BLOCKING FOR ALL RESTROOM ACCESSORIES INCLUDING CABINETRY, COUNTERTOPS, GRAB BARS AND FUTURE ADULT CHANGE TABLE.
7. GRADE LEVEL SMOOTH CONCRETE FLOOR READY FOR FINISH THROUGHOUT.
8. ALL SURFACES WHICH ARE REQUIRED TO RECEIVE PAINT MUST BE PROPERLY PRIMED.
9. COORDINATE WITH MECHANICAL DRAWINGS THE FIXTURE TYPES AND QUANTITIES OF ALL TOILETS, URINALS, SINKS, JANITOR SINKS, FLOOR DRAINS, ETC.
10. CO-ORDINATE WITH HVAC DRAWINGS FOR LOCATIONS AND QUANTITIES OF ALL AIR DIFFUSERS, EXHAUST FANS, DOOR LOUVRES, ETC.
11. CO-ORDINATE WITH ELECTRICAL DRAWINGS FOR LOCATIONS AND QUANTITIES OF ALL ELECTRICAL OUTLETS, VOICE DATA OUTLETS, EMERG. SIGNAGE AND LIGHTING FIXTURES.

d.c. mccloskey engineering ltd.
200-5745 wyandotte street east, windsor, ontario n8s 1m6 tel (519) 977 6800

general notes:

1. THIS PRINT IS AN INSTRUMENT OF SERVICE ONLY AND IS THE PROPERTY OF THE ENGINEER.
2. DRAWINGS SHALL NOT BE SCALED.
3. CONTRACTORS SHALL VERIFY AND BE RESPONSIBLE FOR ALL DIMENSIONS AND CONDITIONS ON THE JOB AND THIS OFFICE MUST BE NOTIFIED OF ANY VARIATIONS FROM THE DIMENSIONS AND CONDITIONS SHOWN BY THESE DRAWINGS
4. ATTENTION IS DIRECTED TO PROVISIONS IN THE GENERAL CONDITIONS REGARDING CONTRACTOR'S RESPONSIBILITIES IN REGARDS TO SUBMISSION OF SHOP DRAWINGS.
5. IN THE EVENT THE DESIGNER IS RETAINED TO REVIEW SHOP DRAWINGS, SUCH REVIEW IS ONLY TO CHECK FOR CONFORMANCE WITH DESIGN CONCEPT AND WITH THE INFORMATION GIVEN IN THE CONTRACT DOCUMENTS
6. CONTRACTORS SHALL PROMPTLY NOTIFY THE DESIGNER IN WRITING OF THE EXISTENCE OF ANY OBSERVED VARIATIONS BETWEEN THE CONTRACT DOCUMENTS AND ANY APPLICABLE CODES OR BY-LAWS
7. THE DESIGNER IS NOT RESPONSIBLE FOR THE CONTRACTOR'S MEANS, METHODS AND OR TECHNIQUES IN THE CONSTRUCTION OF THIS FACILITY.

DETAIL NUMBER / LOCATION SHEET / DETAIL SHEET

DATE (dd/mm/yy)	ISSUED FOR
05/05/17	BULIDING PERMIT
–	–

PROJECT

PROPOSED BUILDING EXPANSION

301 CROFT DRIVE
LAKESHORE, ONTARIO

CLIENT

ECODEVELOPMENTS 2015 INC.

DRAWING TITLE

REFLECTED CEILING PLANS, DOOR SCHEDULES AND WASHROOM DETAILS

DATE :	FEB. 2017
SCALE :	AS NOTED
DRAWN BY :	BC/JLD
CHECKED BY :	DCM
PROJECT FILE NO.	M17–103
DRAWING NO.	A1.2

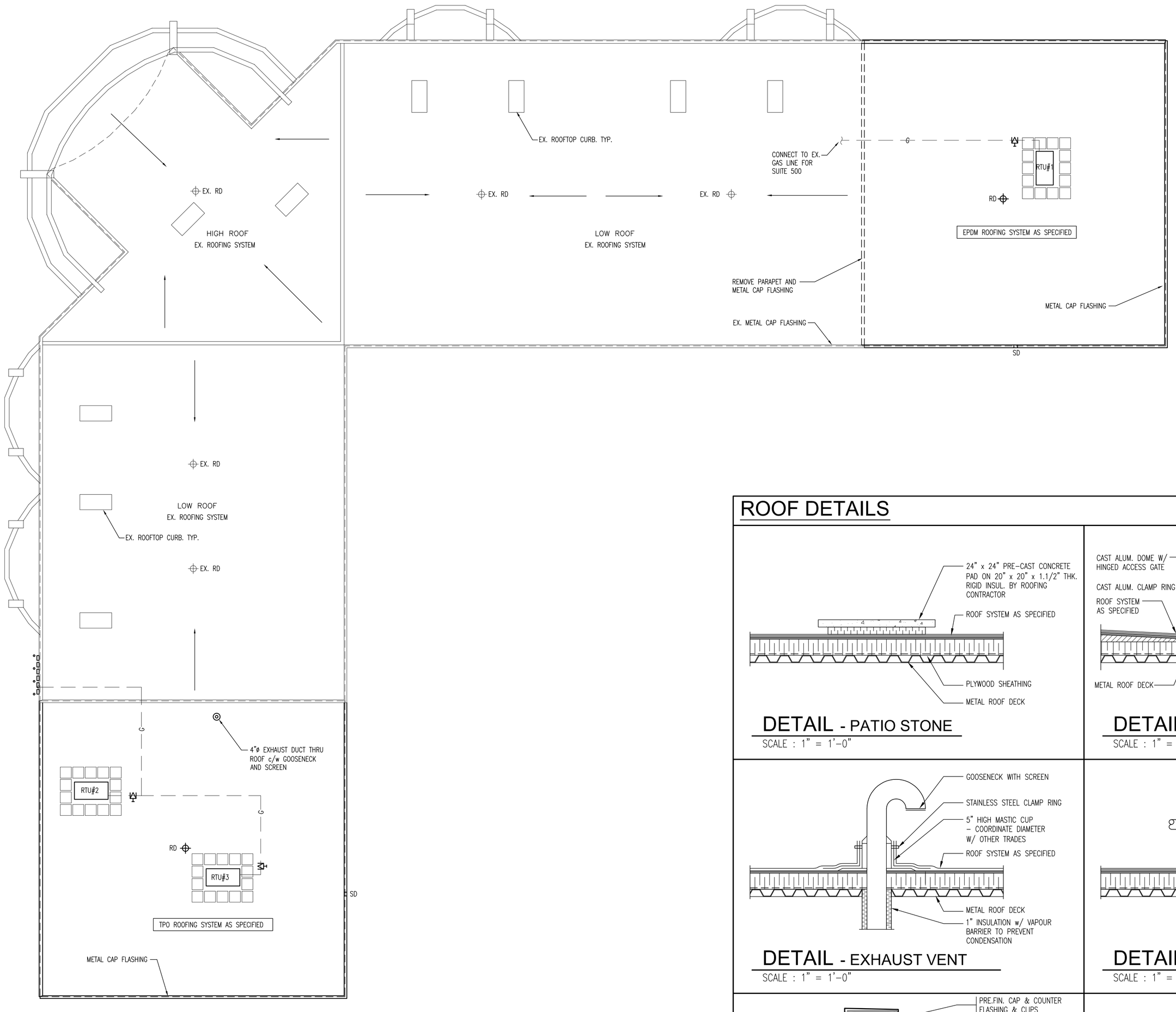

ROOF PLAN

SCALE : 3/32" = 1'-0"

0 2 4 8 16 32 FEET

ROOFING NOTES:

1 – ROOFING ASSEMBLY SHALL BE TPO FULLY ADHERED MEMBRANE ROOFING SYSTEM. PRODUCTS BY FIRESTONE, CARLISLE, LUXSUCO ARE ACCEPTABLE.

2 – THIS CONTRACTOR SHALL INSPECT AREAS OF NEW ROOFING WORK AND CONFIRM THAT THE SUBSTRATE IS ACCEPTABLE TO RECEIVE NEW ROOFING WORK. NOTIFY THE CONSULTANT IF ANY PART OF SUBSTRATE IS NOT ACCEPTABLE.

3 – INSTALL 'ARMORGUARD' VAPOUR BARRIER BY IKO ON THE METAL ROOF DECK, USING ADHESIVE AT ROOF DECK AND AT LAP JOINTS, AS RECOMMENDED BY THE MANUFACTURER.

4 – INSTALL 2 LAYERS OF POLY ISO INSULATION WITH MINIMUM LONG TERM R – VALUE OF 35, OVER VAPOUR BARRIER, STAGGER JOINTS OF INSULATION BOARDS.

5 – INSTALL 60 mm THICK TPO SINGLE PLY ROOFING MEMBRANE OVER INSULATION AS PER THE MANUFACTURER'S INSTRUCTIONS. CONTINUE ROOFING MEMBRANE OVER AND DOWN PARAPETS.

6 – LAY CONTINUOUS PROTECTIVE MAT OVER THE ENTIRE ROOFING AREA.

7 – INSTALL CONCRETE WALKWAY AS SHOWN ON THE DRAWINGS.

8 – INSTALL 24 ga. GALVANIZED STEEL PREFINISHED CAP FLASHING WHERE SHOWN ON THE DRAWINGS.

9 – ROOFING CONTRACTOR SHALL PROVIDE MANUFACTURER'S 15 YEARS LABOUR AND MATERIAL WARRANTY IN THE NAME OF THE OWNER, AGAINST DEFECTIVE MATERIAL. THE WARRANTY PERIOD SHALL START AT THE SUBSTANTIAL COMPLETION OF WORKS.

10 – ROOFING CONTRACTOR SHALL PROVIDE 2 YEARS WRITTEN WARRANTY IN THE NAME OF THE OWNER AGAINST DEFECTIVE WORKMANSHIP.

*CO–ORDINATE ALL ROOF PENETRATIONS WITH MECHANICAL AND ELECTRICAL DRAWINGS

ROOF SYMBOLS

- ROOF DRAIN
- VENT
- EXHAUST FAN
- EXHAUST STACK
- SD SCUPPER DRAIN
- RELIEF VENT
- •E ELECTRICAL CONDUIT THRU ROOF
- •V VENT STACK
- •A ANTENNA SUPPORT BRACKET
- SATELITE DISH
- DUCT THRU ROOF

ROOF DETAILS

DETAIL - PATIO STONE

SCALE : 1" = 1'–0"

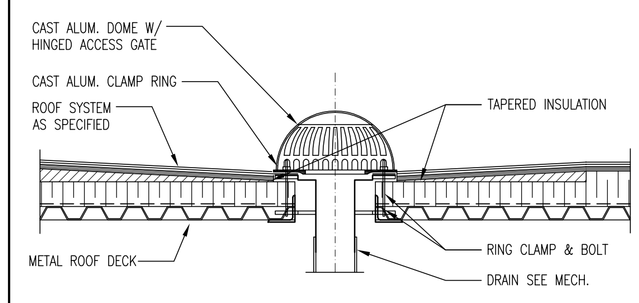

DETAIL - TYP. ROOF SUMP

SCALE : 1" = 1'–0"

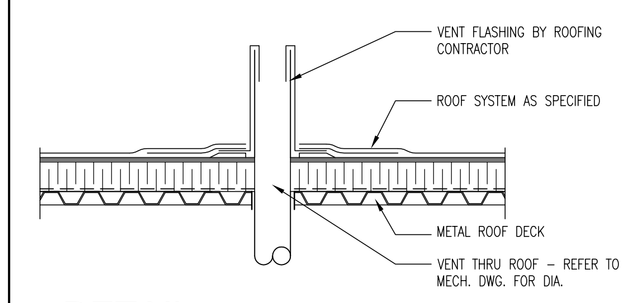

DETAIL - TYP. THRU ROOF VENT

SCALE : 1" = 1'–0"

DETAIL - EXHAUST VENT

SCALE : 1" = 1'–0"

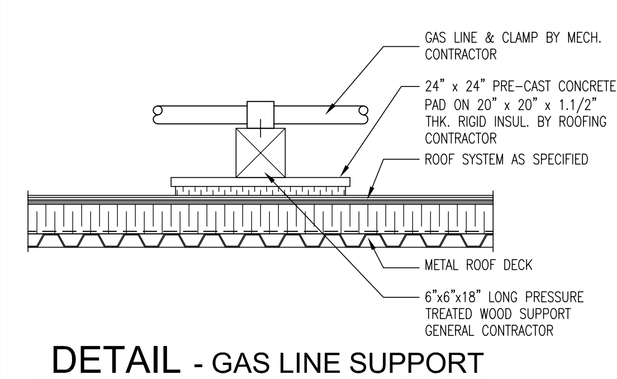

DETAIL - GAS LINE SUPPORT

SCALE : 1" = 1'–0"

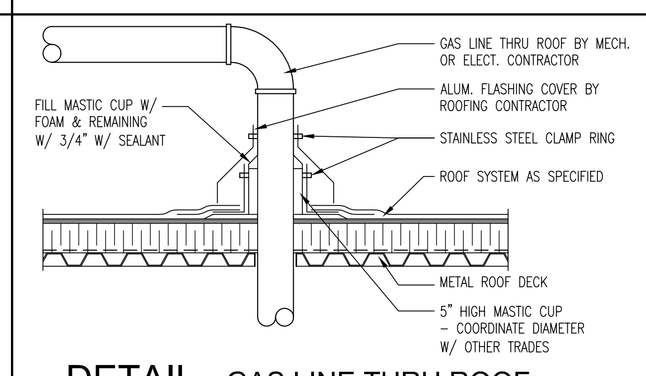

DETAIL - GAS LINE THRU ROOF

SCALE : 1" = 1'–0"

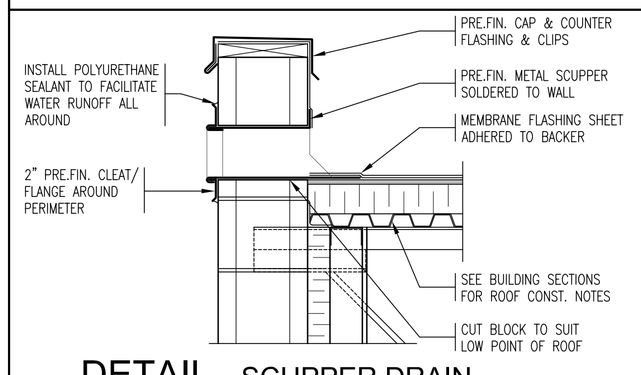

DETAIL - SCUPPER DRAIN

SCALE : 1" = 1'–0"

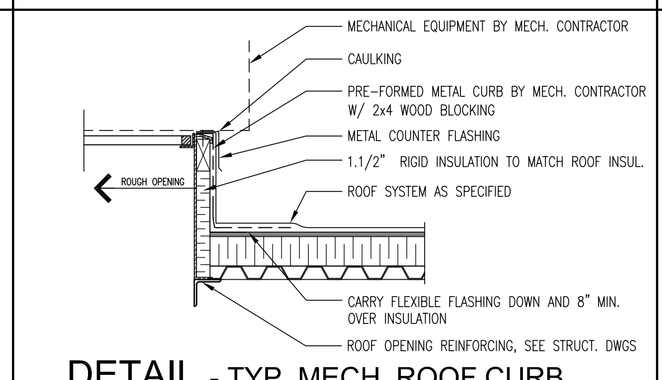

DETAIL - TYP. MECH. ROOF CURB

SCALE : 1" = 1'–0"

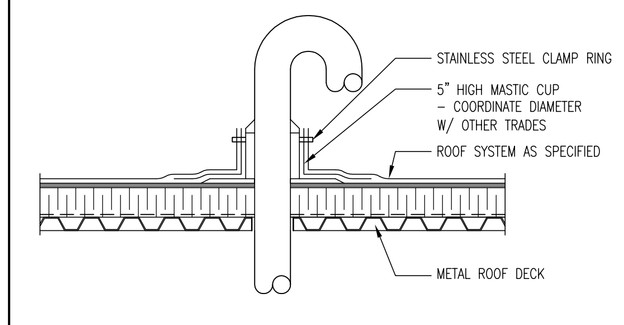

DETAIL - ELECTRICAL CONE

SCALE : 1" = 1'–0"

d.c. mccloskey engineering ltd.
200–5745 wyandotte street east, windsor, ontario n8x 1m6 tel (519) 977 6800

general notes:

1. THIS PRINT IS AN INSTRUMENT OF SERVICE ONLY AND IS THE PROPERTY OF THE ENGINEER.
2. DRAWINGS SHALL NOT BE SCALED.
3. CONTRACTORS SHALL VERIFY AND BE RESPONSIBLE FOR ALL DIMENSIONS AND CONDITIONS ON THE JOB AND THIS OFFICE MUST BE NOTIFIED OF ANY VARIATIONS FROM THE DIMENSIONS AND CONDITIONS SHOWN BY THESE DRAWINGS.
4. ATTENTION IS DIRECTED TO PROVISIONS IN THE GENERAL CONDITIONS REGARDING CONTRACTOR'S RESPONSIBILITIES IN REGARDS TO SUBMISSION OF SHOP DRAWINGS.
5. IN THE EVENT THE DESIGNER IS RETAINED TO REVIEW SHOP DRAWINGS, SUCH REVIEW IS ONLY TO CHECK FOR CONFORMANCE WITH DESIGN CONCEPT AND WITH THE INFORMATION GIVEN IN THE CONTRACT DOCUMENTS
6. CONTRACTORS SHALL PROMPTLY NOTIFY THE DESIGNER IN WRITING OF THE EXISTENCE OF ANY OBSERVED VARIATIONS BETWEEN THE CONTRACT DOCUMENTS AND ANY APPLICABLE CODES OR BY–LAWS
7. THE DESIGNER IS NOT RESPONSIBLE FOR THE CONTRACTOR'S MEANS, METHODS AND OR TECHNIQUES IN THE CONSTRUCTION OF THIS FACILITY.

DETAIL NUMBER
LOCATION SHEET | DETAIL SHEET

DATE (dd/mm/yy)	ISSUED FOR
05/05/17	BUILDING PERMIT
–	–

PROJECT

PROPOSED BUILDING EXPANSION

301 CROFT DRIVE
LAKESHORE, ONTARIO

CLIENT

ECODEVELOPMENTS 2015 INC.

DRAWING TITLE

ROOF PLAN AND DETAILS

DATE :	FEB. 2017
SCALE :	AS NOTED
DRAWN BY :	BC/JLD
CHECKED BY :	DCM
PROJECT FILE NO.	M17–103
DRAWING NO.	A2.1

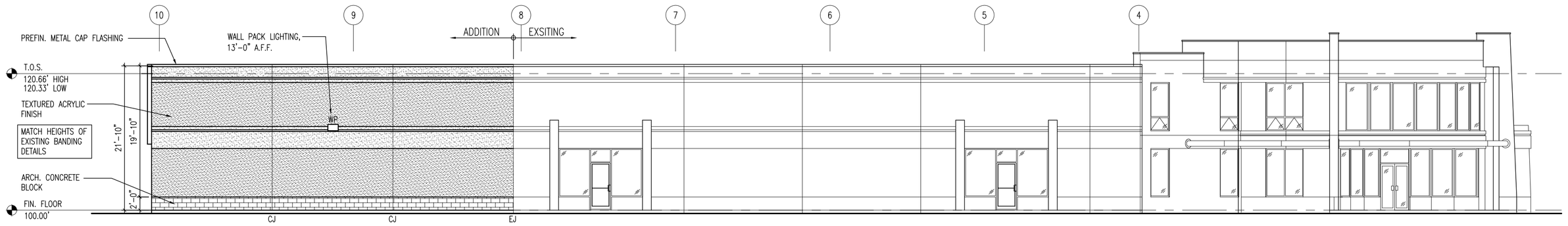

ALL EXTERIOR BUILDING MATERIALS, FEATURES AND COLOURS TO MATCH EXISTING

LEGEND
EJ – EXPANSION JOINT
CJ – CONTROL JOINT

SUITE 500 - NORTH ELEVATION

SCALE : 3/32" = 1'-0" 0 2 4 8 16 32 FEET

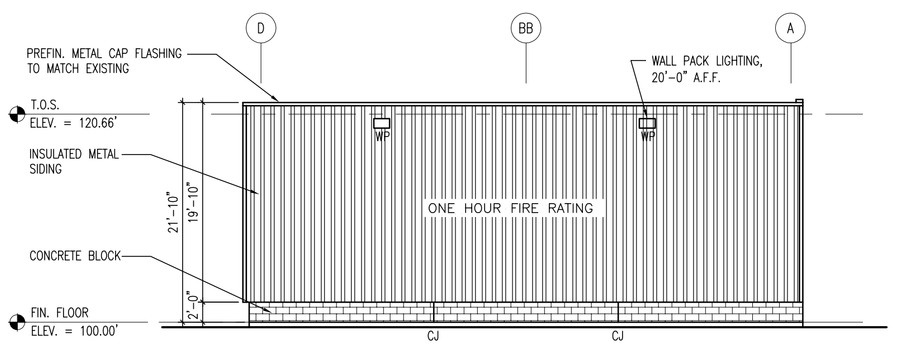

SUITE 500 - EAST ELEVATION

SCALE : 3/32" = 1'-0" 0 2 4 8 16 32 FEET

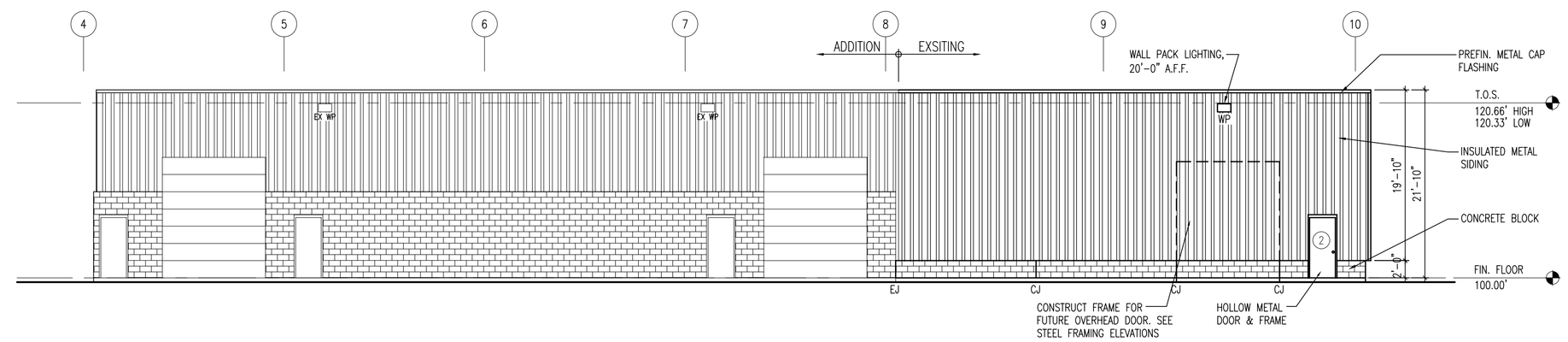

SUITE 500 - SOUTH ELEVATION

SCALE : 3/32" = 1'-0" 0 2 4 8 16 32 FEET

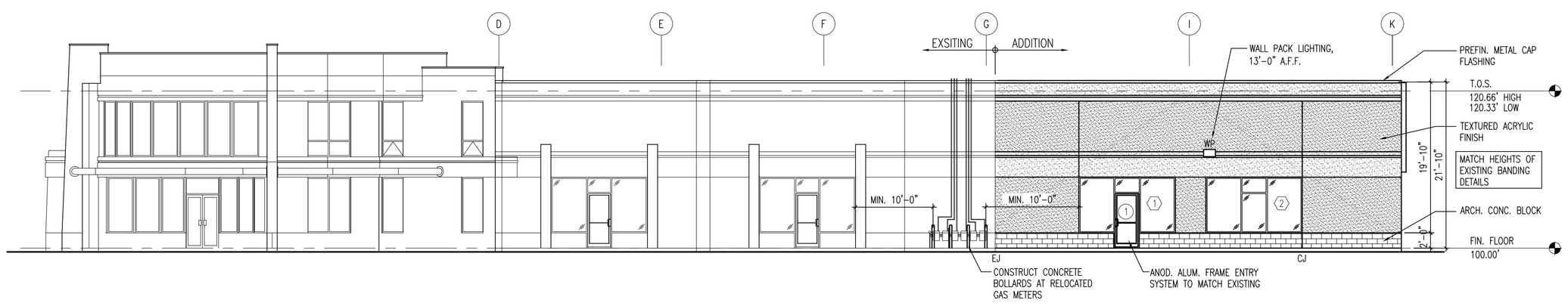

SUITE 600 - WEST ELEVATION

SCALE : 3/32" = 1'-0" 0 2 4 8 16 32 FEET

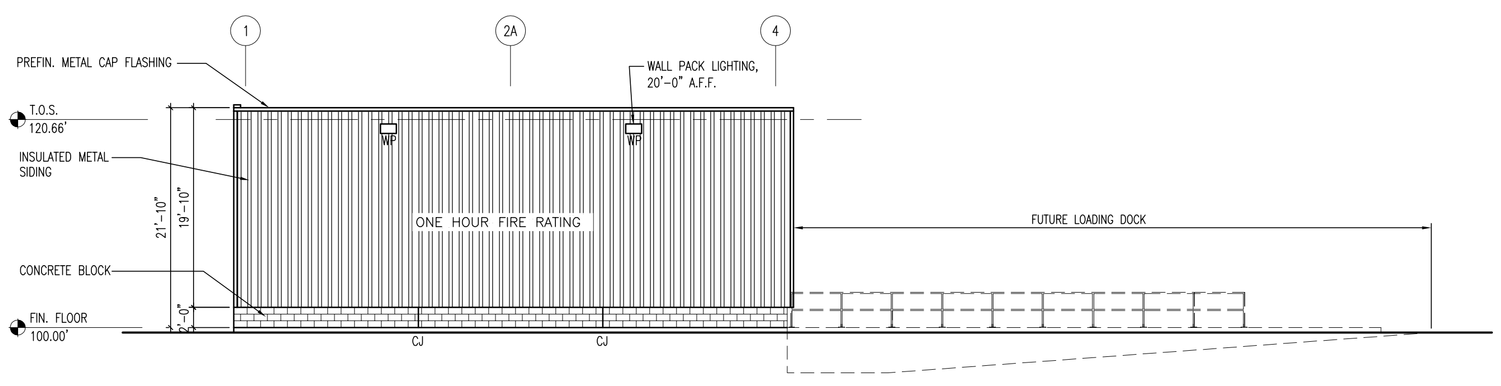

SUITE 600 - SOUTH ELEVATION

SCALE : 3/32" = 1'-0" 0 2 4 8 16 32 FEET

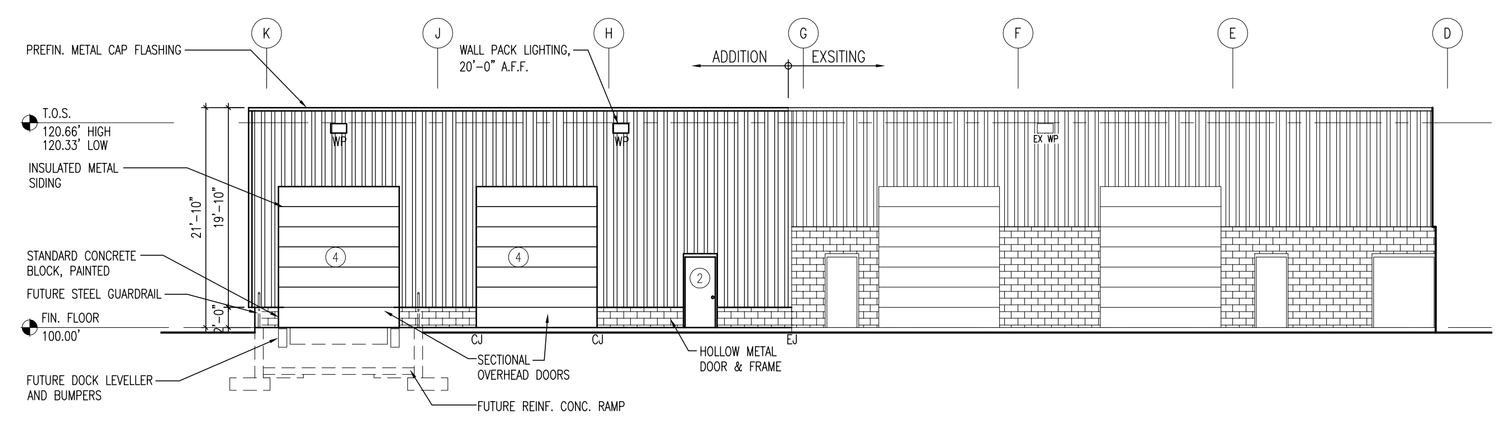

SUITE 600 - EAST ELEVATION

SCALE : 3/32" = 1'-0" 0 2 4 8 16 32 FEET

d.c. mccloskey engineering ltd.
200-5745 wyandotte street east, windsor, ontario n8x 1m6 tel (519) 977 6800

general notes:

1. THIS PRINT IS AN INSTRUMENT OF SERVICE ONLY AND IS THE PROPERTY OF THE ENGINEER.
2. DRAWINGS SHALL NOT BE SCALED.
3. CONTRACTORS SHALL VERIFY AND BE RESPONSIBLE FOR ALL DIMENSIONS AND CONDITIONS ON THE JOB AND THIS OFFICE MUST BE NOTIFIED OF ANY VARIATIONS FROM THE DIMENSIONS AND CONDITIONS SHOWN BY THESE DRAWINGS.
4. ATTENTION IS DIRECTED TO PROVISIONS IN THE GENERAL CONDITIONS REGARDING CONTRACTOR'S RESPONSIBILITIES IN REGARDS TO SUBMISSION OF SHOP DRAWINGS.
5. IN THE EVENT THE DESIGNER IS RETAINED TO REVIEW SHOP DRAWINGS, SUCH REVIEW IS ONLY TO CHECK FOR CONFORMANCE WITH DESIGN CONCEPT AND WITH THE INFORMATION GIVEN IN THE CONTRACT DOCUMENTS.
6. CONTRACTORS SHALL PROMPTLY NOTIFY THE DESIGNER IN WRITING OF THE EXISTENCE OF ANY OBSERVED VARIATIONS BETWEEN THE CONTRACT DOCUMENTS AND ANY APPLICABLE CODES OR BY-LAWS.
7. THE DESIGNER IS NOT RESPONSIBLE FOR THE CONTRACTOR'S MEANS, METHODS AND OR TECHNIQUES IN THE CONSTRUCTION OF THIS FACILITY.

DETAIL NUMBER
LOCATION SHEET | DETAIL SHEET

DATE (dd/mm/yy)	ISSUED FOR
12/04/17	SITE PLAN AMENDMENT
05/05/17	BUILDING PERMIT

PROJECT

PROPOSED BUILDING EXPANSION

301 CROFT DRIVE
LAKESHORE, ONTARIO

CLIENT

ECODEVELOPMENTS 2015 INC.

DRAWING TITLE

BUILDING ELEVATIONS

DATE :	FEB. 2017
SCALE :	AS NOTED
DRAWN BY :	BC/JLD
CHECKED BY :	DCM
PROJECT FILE NO.	M17-103
DRAWING NO.	A3.1

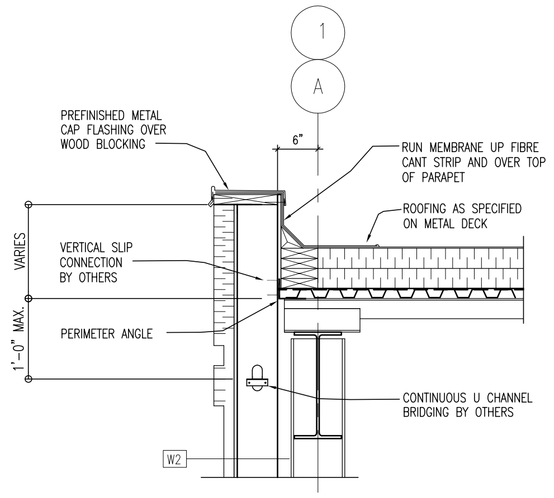

7 DETAIL
A4.1 A4.1 SCALE : 3/4" = 1'-0"

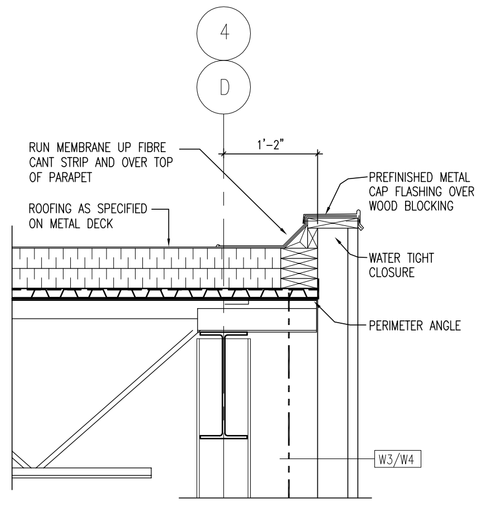

8 DETAIL
A4.1 A4.1 SCALE : 3/4" = 1'-0"

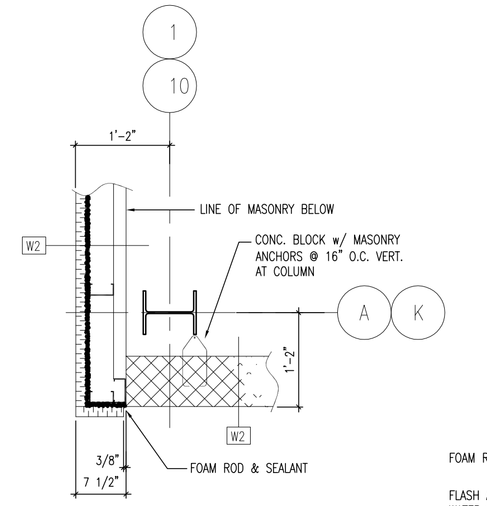

9 DETAIL
A1.1 A4.1 SCALE : 3/4" = 1'-0"

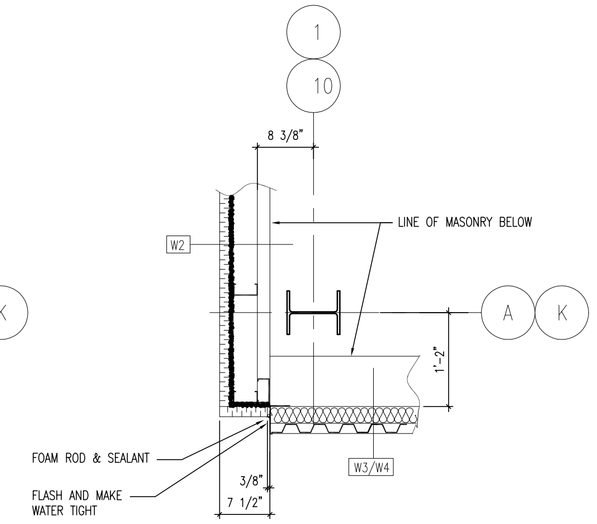

10 DETAIL
A1.1 A4.1 SCALE : 3/4" = 1'-0"

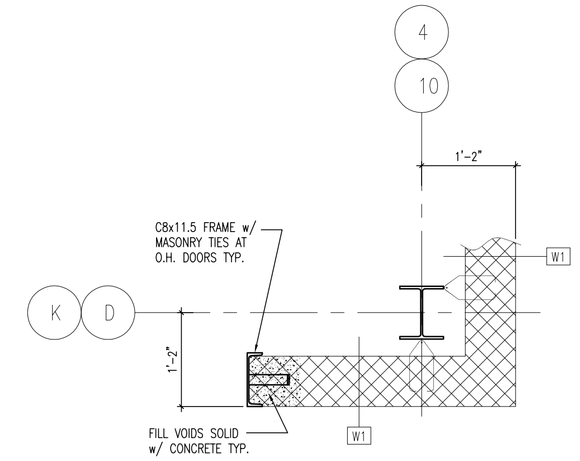

11 DETAIL
A1.1 A4.1 SCALE : 3/4" = 1'-0"

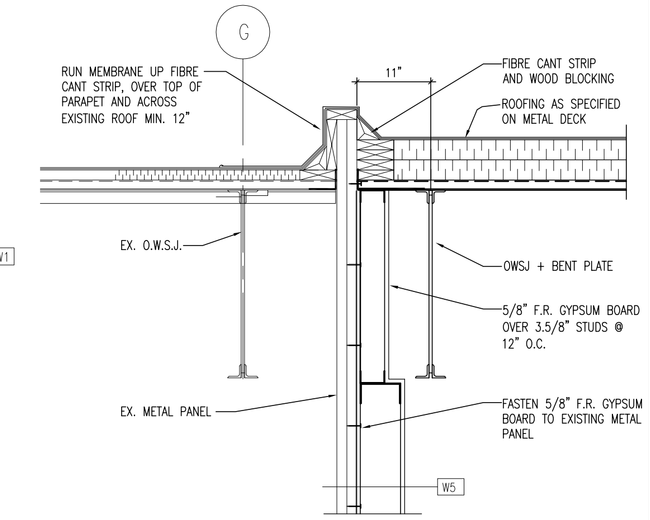

12 DETAIL
A4.1 A4.1 SCALE : 3/4" = 1'-0"

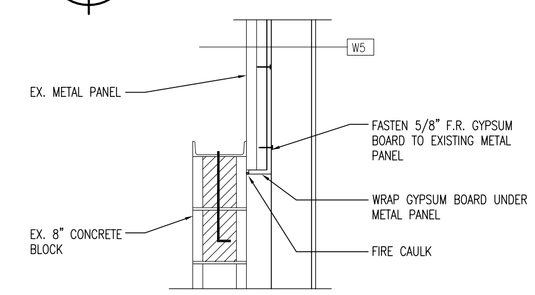

13 DETAIL
A4.1 A4.1 SCALE : 3/4" = 1'-0"

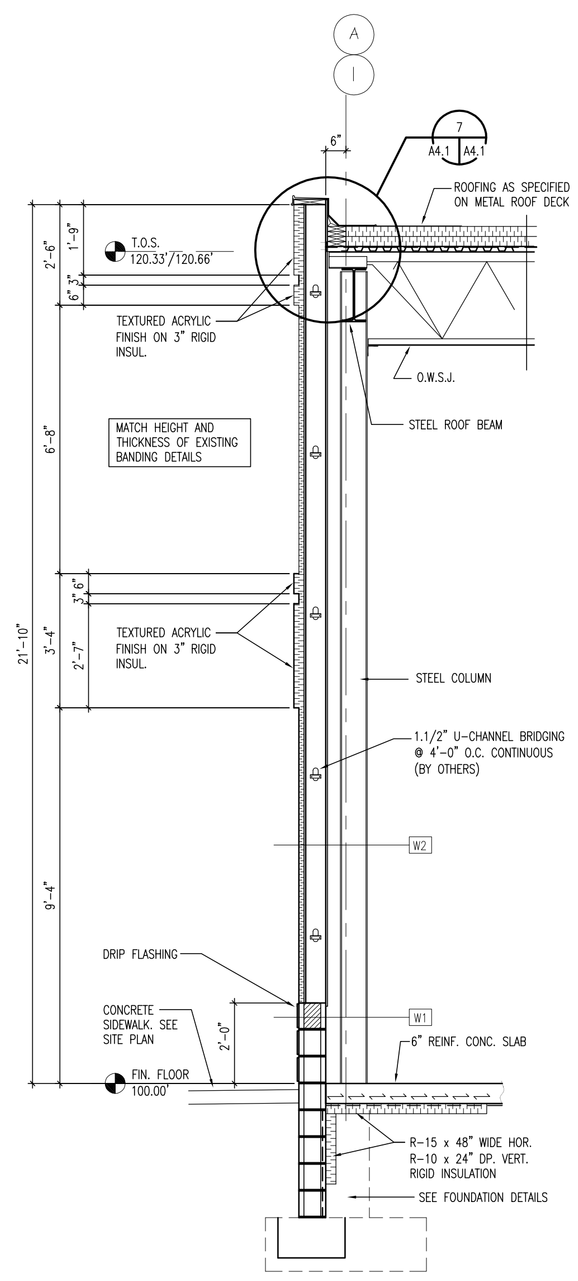

1 SECTION
A1.1 A4.1 SCALE : 3/8" = 1'-0"

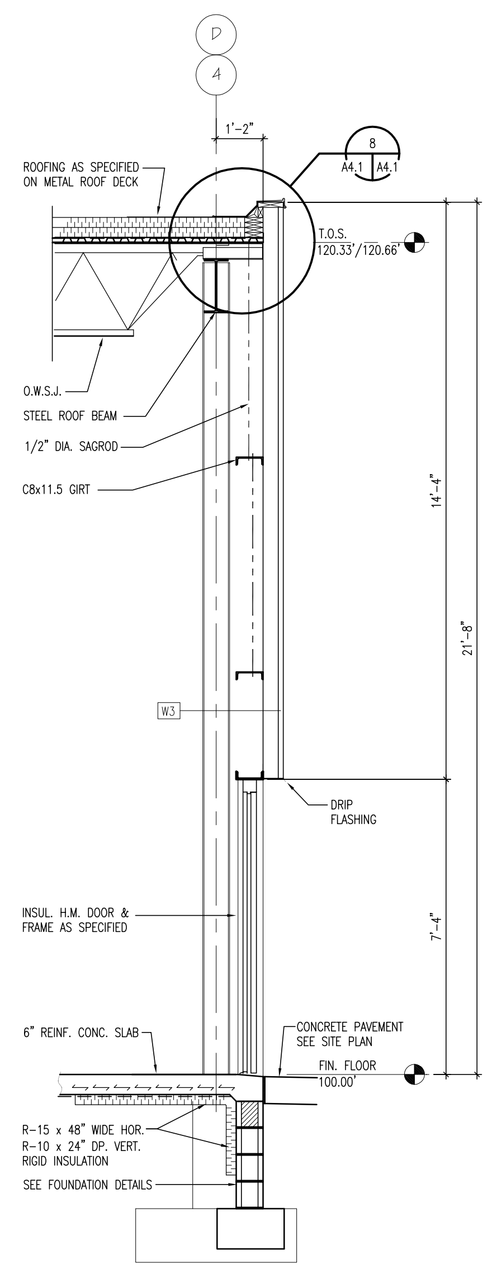

2 SECTION
A1.1 A4.1 SCALE : 3/8" = 1'-0"

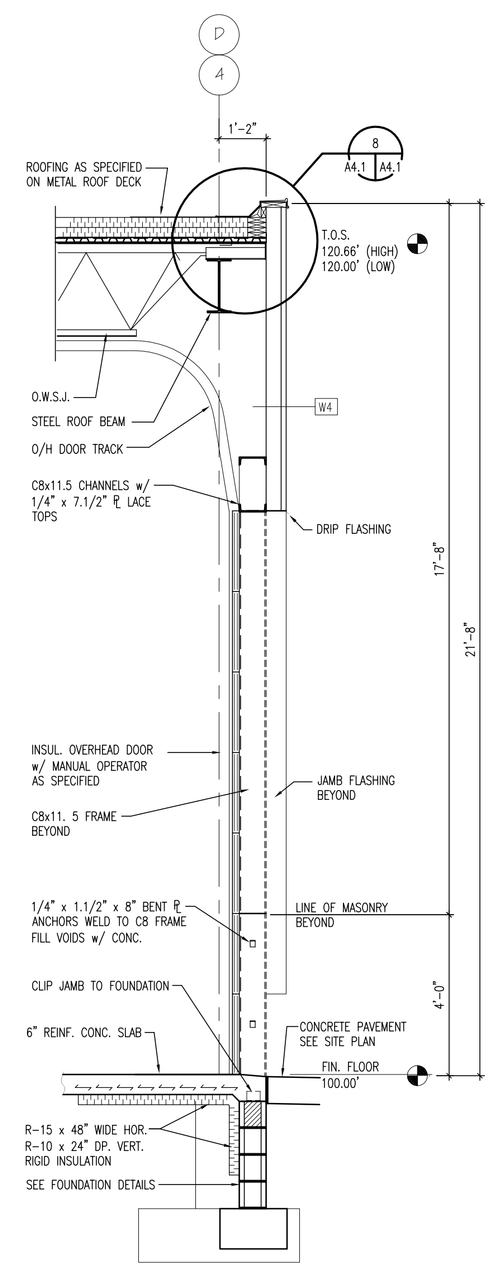

3 SECTION
A1.1 A4.1 SCALE : 3/8" = 1'-0"

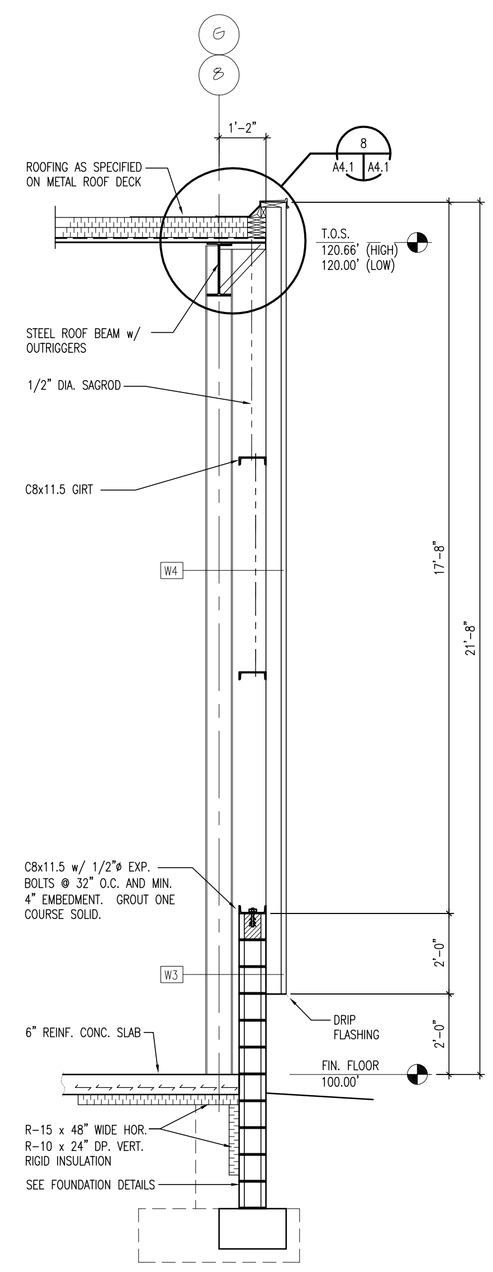

4 SECTION
A1.1 A4.1 SCALE : 3/8" = 1'-0"

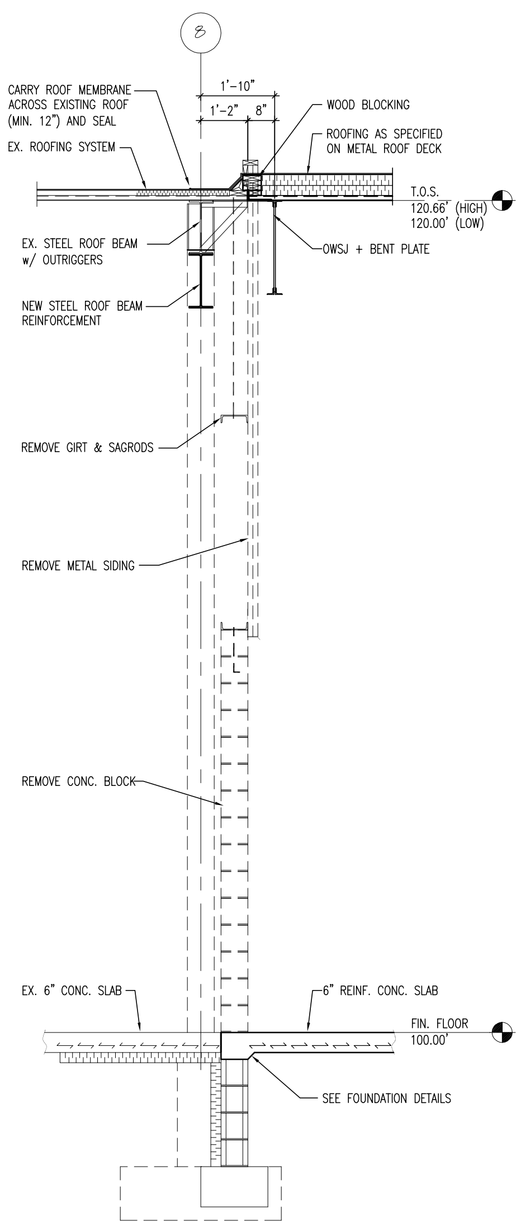

5 SECTION
A1.1 A4.1 SCALE : 3/8" = 1'-0"

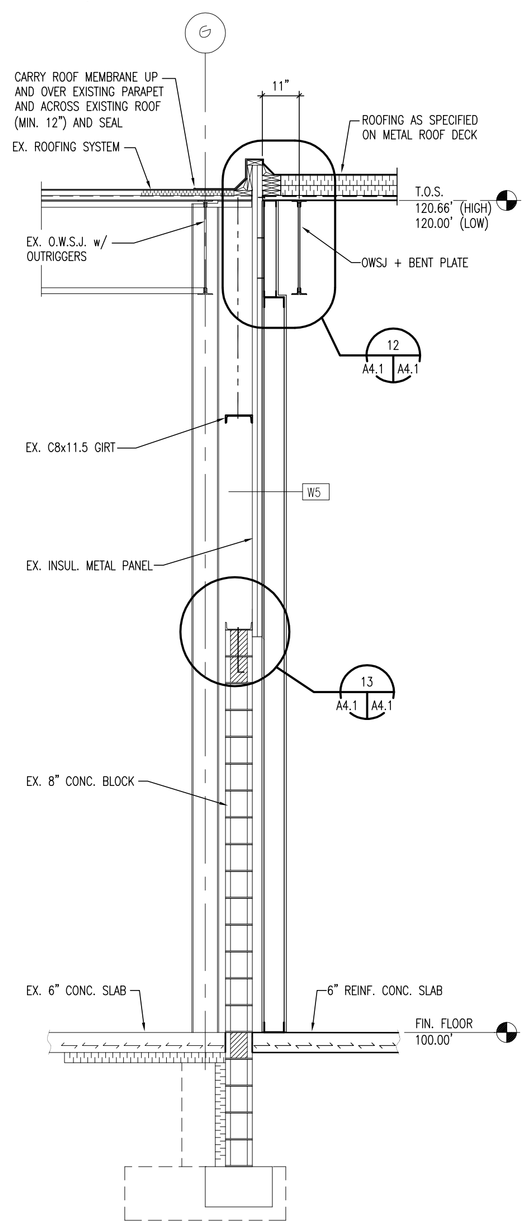

6 SECTION
A1.1 A4.1 SCALE : 3/8" = 1'-0"

d.c. mccloskey engineering ltd.
200-5745 wyandotte street east, windsor, ontario n8x 1m6 tel (519) 977 6800

general notes:

1. THIS PRINT IS AN INSTRUMENT OF SERVICE ONLY AND IS THE PROPERTY OF THE ENGINEER.
2. DRAWINGS SHALL NOT BE SCALED.
3. CONTRACTORS SHALL VERIFY AND BE RESPONSIBLE FOR ALL DIMENSIONS AND CONDITIONS ON THE JOB AND THIS OFFICE MUST BE NOTIFIED OF ANY VARIATIONS FROM THE DIMENSIONS AND CONDITIONS SHOWN BY THESE DRAWINGS.
4. ATTENTION IS DIRECTED TO PROVISIONS IN THE GENERAL CONDITIONS REGARDING CONTRACTOR'S RESPONSIBILITIES IN REGARDS TO SUBMISSION OF SHOP DRAWINGS.
5. IN THE EVENT THE DESIGNER IS RETAINED TO REVIEW SHOP DRAWINGS, SUCH REVIEW IS ONLY TO CHECK FOR CONFORMANCE WITH DESIGN CONCEPT AND WITH THE INFORMATION GIVEN IN THE CONTRACT DOCUMENTS.
6. CONTRACTORS SHALL PROMPTLY NOTIFY THE DESIGNER IN WRITING OF THE EXISTENCE OF ANY OBSERVED VARIATIONS BETWEEN THE CONTRACT DOCUMENTS AND ANY APPLICABLE CODES OR BY-LAWS.
7. THE DESIGNER IS NOT RESPONSIBLE FOR THE CONTRACTOR'S MEANS, METHODS AND OR TECHNIQUES IN THE CONSTRUCTION OF THIS FACILITY.

DETAIL NUMBER
LOCATION SHEET | DETAIL SHEET

DATE (dd/mm/yy)	ISSUED FOR
05/05/17	BUILDING PERMIT
–	–

PROJECT

PROPOSED BUILDING EXPANSION

301 CROFT DRIVE
LAKESHORE, ONTARIO

CLIENT

ECODEVELOPMENTS 2015 INC.

DRAWING TITLE

BUILDING SECTIONS AND DETAILS

DATE :	FEB. 2017
SCALE :	AS NOTED
DRAWN BY :	BC/JLD
CHECKED BY :	DCM
PROJECT FILE NO.	M17-103
DRAWING NO.	A4.1

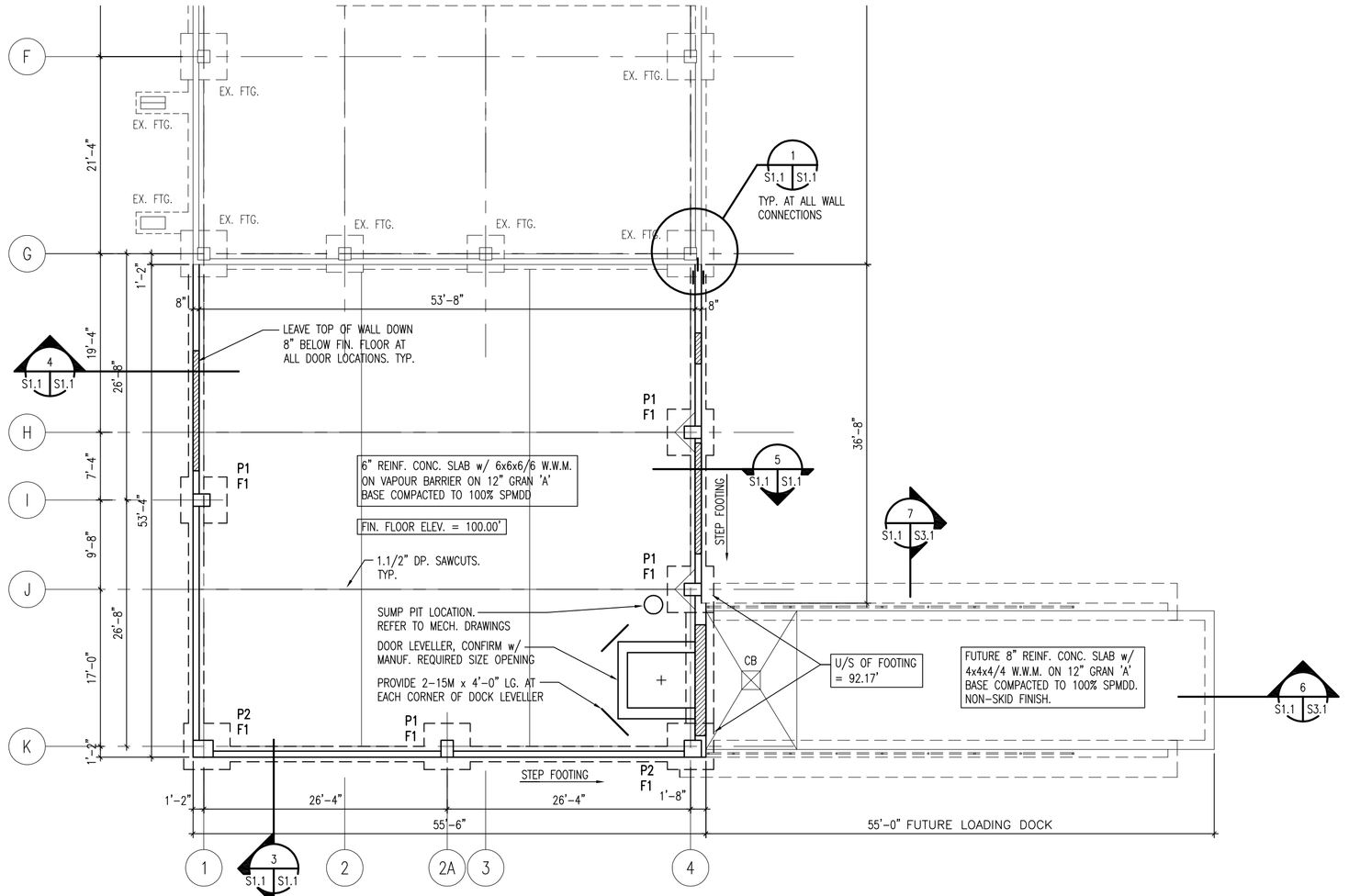

FOUNDATION PLAN - SUITE 600

SCALE : 3/32" = 1'-0" 0 2 4 8 16 32 FEET

THE OWNER ALSO AGREES TO HAVE THE APPROVED ELEVATION AS PER THIS LOT GRADING PLAN VERIFIED BY AN ONTARIO LAND SURVEYOR AT THE FOLLOWING STAGES OF CONSTRUCTION:
(A) PRIOR TO THE POURING OF FOOTINGS (TOP OF FORMS ELEVATION); AND
(B) FOLLOWING COMPLETION OF CONSTRUCTION.

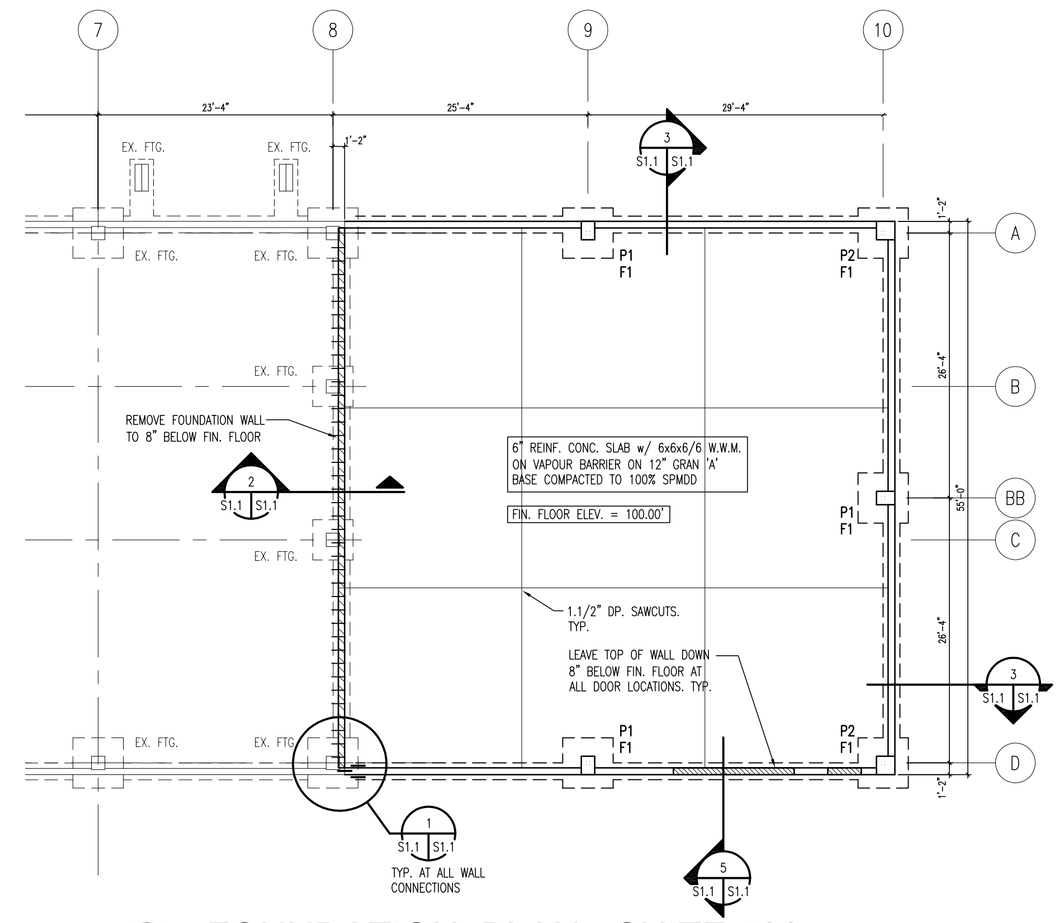

FOUNDATION PLAN - SUITE 500

SCALE : 3/32" = 1'-0" 0 2 4 8 16 32 FEET

PIER SCHEDULE

PIER MARK	PIER SIZE LENGTH	PIER SIZE WIDTH	PIER REINFORCEMENT VERTICAL	PIER REINFORCEMENT TIES	PIER REINFORCEMENT DETAIL	REMARKS
P1	1'-4"	1'-10"	4-20M	10M @ 12" O.C.	A	SEE NOTES 1, 2 & 3
P2	2'-2"	1'-10"	4-20M	10M @ 12" O.C.	A	SEE NOTES 1, 2 & 3

NOTES:
1. TOP OF PIER TO BE 8" BELOW FINISHED FLOOR, U.N.O.
2. SEE OTHER SCHEDULES FOR FURTHER INFORMATION
3. MAINTAIN 2" CONCRETE COVER FOR VERTICAL REINFORCING BARS

PIER REINFORCEMENT ARRANGEMENT DETAILS

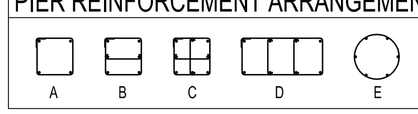

FOOTING SCHEDULE

FOOTING MARK	FOOTING SIZE LENGTH	FOOTING SIZE WIDTH	FOOTING SIZE DEPTH	FOOTING REINFORCEMENT BOTTOM LAYER	FOOTING REINFORCEMENT TOP LAYER	REMARKS
F1	5'-0"	5'-0"	1'-2"	6-20M E.W.	–	SEE NOTES 1, 2 & 3

NOTES:
1. SEE OTHER SCHEDULES FOR FURTHER INFORMATION
2. MAINTAIN 3" CONCRETE COVER AT BOTTOM REINFORCING BARS
3. MAINTAIN 2" CONCRETE COVER AT TOP REINFORCING BARS

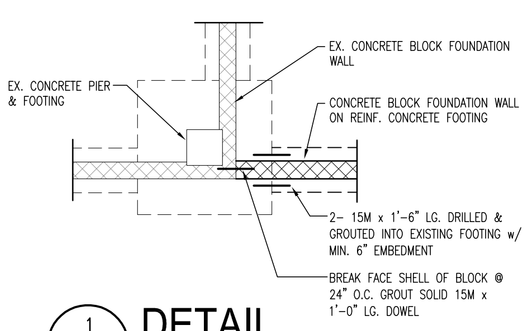

DETAIL

S1.1 S1.1 SCALE : 1/4" = 1'-0"

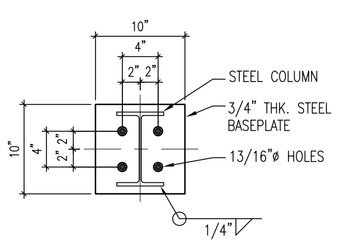

BASEPLATE DETAIL

SCALE : 1" = 1'-0"

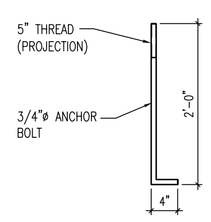

ANCHOR BOLT

SCALE : 3/4" = 1'-0"

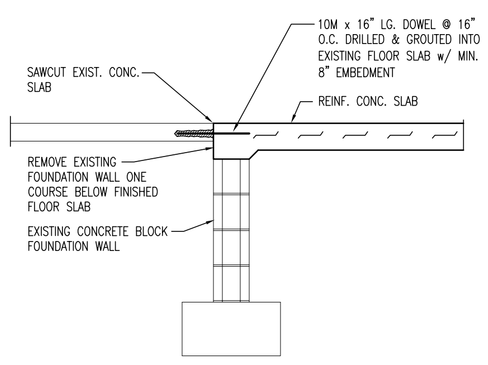

SECTION

S1.1 S1.1 SCALE : 1/2" = 1'-0"

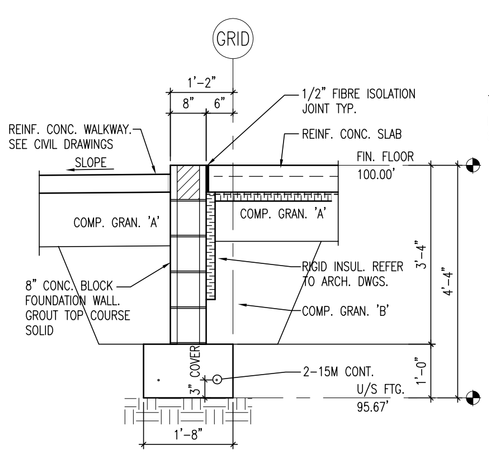

SECTION

S1.1 S1.1 SCALE : 1/2" = 1'-0"

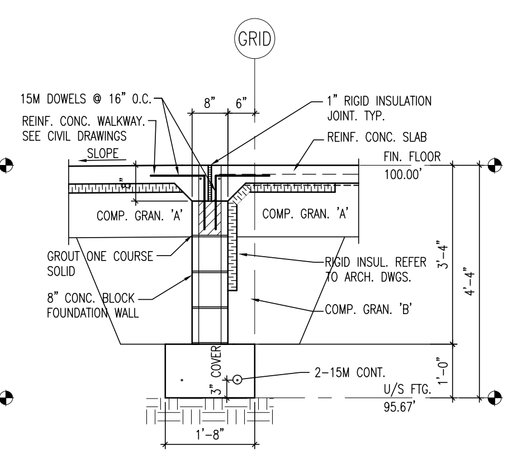

SECTION

S1.1 S1.1 SCALE : 1/2" = 1'-0"

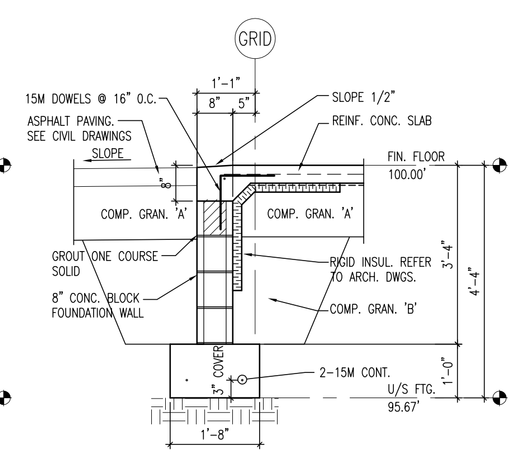

SECTION

S1.1 S1.1 SCALE : 1/2" = 1'-0"

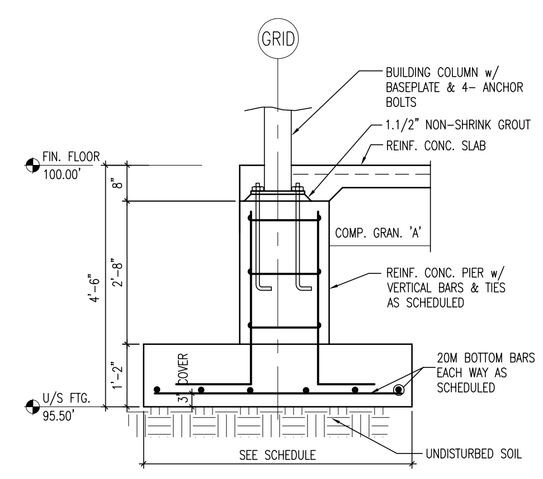

TYPICAL FOOTING DETAIL

SCALE : 1/2" = 1'-0"

CONCRETE

ALL CONCRETE TO HAVE THE FOLLOWING STRENGTH AT 28 DAYS AND BE AIR ENTRAINED 5% MINIMUM TO 8% MAXIMUM UNLESS NOTED OTHERWISE:

FOOTINGS -20 MPa -NOT AIR ENTRAINED
PIERS & FOUNDATION WALLS -30 MPa
INTERIOR FLOOR SLABS ON GRADE -30 MPa -NOT AIR ENTRAINED
EXTERIOR CONCRETE -32 MPa (CITY MIX)

CLEAR CONCRETE COVER TO REBAR TO BE 3" FOR CONCRETE CAST AGAINST THE GROUND AND 2" IN ALL OTHER CASES.

CONCRETE TO BE MOIST CURED FOR 72 HOURS AFTER FINISHING.

TAKE ALL COLD OR HOT WEATHER PRECAUTIONS AS REQUIRED.

REINFORCING STEEL TO BE DEFORMED BARS WITH A YIELD STRENGTH OF 400 MPa IN ACCORDANCE WITH THE LATEST EDITION OF CSA G30.18-M92 (R1998). WELDED WIRE FABRIC TO HAVE A YIELD STRENGTH OF 450 MPa IN ACCORDANCE WITH THE LATEST EDITION OF CSA G30.5.

ALL SLAB REINFORCING STEEL SHALL HAVE THE FOLLOWING MIN. SPLICES UNLESS NOTED OTHERWISE:
10M - 18"
15M - 24"
20M - 30"
25M - 40"

DO NOT TACK WELD REBAR.

BEFORE CONCRETE IS PLACED, THE CONTRACTOR SHALL CO-ORDINATE AND CHECK WITH ALL TRADES TO ENSURE THE PROPER PLACEMENT OF ALL SLEEVES, INSERTS, CURBS, ETC. RELATING TO THE WORK AS SHOWN ON THE DRAWINGS.

ALL EXTERIOR EXPOSED CONCRETE SURFACES TO BE CURED WITH WHITE PIGMENTED CURING COMPOUND (SEAL-TIGHT WP-45 OR APPROVED EQUAL) APPLIED IN ACCORDANCE WITH MANUFACTURER'S PRINTED INSTRUCTIONS.

ALL HORIZONTAL REINFORCING STEEL BARS IN CONCRETE WALLS AND GRADE BEAMS SHALL BE CONTINUOUS THROUGH PIERS. BEND AT ALL CORNERS AND INTERSECTIONS OR PROVIDE SEPARATE CORNER BARS OF THE SAME SIZES AND SPACING. LAP ALL BARS WITH 24 BAR DIAMETER OR 12" WHICHEVER IS GREATER.

ALL EXPOSED EDGES OF BEAMS, WALLS, PIERS AND COLUMNS SHALL HAVE 3/4" CHAMFER.

CONTRACTOR SHALL CHECK AND VERIFY ALL DIMENSIONS AND EXISTING CONDITIONS, SUCH AS UNDERGROUND AND/OR ABOVEGROUND UTILITIES, SEWERS, CAISSONS ETC. ON SITE. ALL PRECAUTIONS SHALL BE TAKEN TO PREVENT ANY DAMAGE. CONTRACTOR TO REPORT ANY DISCREPANCIES TO THE ENGINEER

FOUNDATIONS

FOUNDATION IS DESIGNED BASED ON AN ALLOWABLE BEARING PRESSURE OF 2000 PSF. IF ACTUAL SOIL CONDITIONS CANNOT SUPPORT THIS LOAD, CONTACT ENGINEER IMMEDIATELY.

INSTALL FOUNDATIONS ON UNDISTURBED SOIL AT THE ELEVATIONS NOTED. IF SOIL IS DISTURBED, IT SHALL BE REMOVED AND REPLACED WITH EITHER GRANULAR 'A' MATERIAL COMPACTED TO 100% SPMDD OR LEAN CONCRETE (15 MPa).

DO NOT PLACE FOUNDATION CONCRETE UNTIL ENGINEER HAS INSPECTED FOUNDATION EXCAVATION.

BACKFILL ALL FOUNDATION EXCAVATIONS WITH COMPACTED GRANULAR MATERIAL, UNLESS NOTED OTHERWISE. BACKFILL SHALL BE GRAN 'B' UP TO THE UNDERSIDE OF THE GRAN 'A' BASE. GRANULAR 'A' BASE SHALL BE 12" THICK UNLESS NOTED OTHERWISE.

ALL EXCESS WATER IN EXCAVATIONS TO BE PUMPED OUT.

PROVIDE STEP FOOTINGS WHERE REQUIRED WITH A MAXIMUM RISE TO RUN RATION OF 1 TO 2 UNLESS NOTED OTHERWISE.

INSTALL 2", 20 psi RIGID INSULATION UNDER SIDEWALK AT ALL DOOR LOCATIONS. EXTEND 48" FROM FOUNDATION WALL AND 48" EACH SIDE OF DOOR.

UNDERSIDE OF ALL BASE PLATES TO BE 6 1/2" BELOW FINISHED FLOOR, U.N.O.

USE 3/4"ø ANCHOR BOLTS, 2'-4" LG. INCLUDING A 4" HOOK & 5" PROJECTION ABOVE TOP OF PIER, U.N.O.

ALL COLUMNS TO HAVE 1.1/2" HIGH STRENGTH, NON-SHRINK LEVELING GROUT UNDER BASE PLATES.

ALL PIER DOWELS TO HAVE 12" HOOK.

PIER SIZE MEASURED FROM OUTSIDE FACE OF FOUNDATION WALL, U.N.O.

SEE ELECTRICAL DRAWINGS FOR LOCATION OF ELECTRICAL CONDUITS. ENSURE THEY ARE PLACED PRIOR TO POURING FLOOR SLABS.

SEE MECHANICAL DRAWINGS FOR LOCATION OF PLUMBING FIXTURES. ENSURE ALL UNDERGROUND PIPING FLOOR DRAINS, CLEANOUTS, ETC., ARE IN PLACE PRIOR TO POURING FLOOR SLABS.

NOTIFICATION OF INSPECTING ENGINEER

IN ACCORDANCE WITH THE REQUIREMENTS OF THE ONTARIO BUILDING CODE, CURRENT EDITION, THE ENGINEER WILL BE REQUIRED TO PERFORM GENERAL REVIEW OF THE BUILDING DURING CONSTRUCTION. THE CONTRACTORS SHALL NOTIFY THE ENGINEER 24 HOURS PREVIOUS TO COMMENCEMENT OF THE FOLLOWING ITEMS:

- PLACING FOOTING CONCRETE
- PLACING RETAINING WALLS, ETC.
- BACKFILLING OF MASONRY OR CONCRETE WALL BELOW GRADE
- INSTALLATION OF STRUCTURAL STEEL, JOISTS, BEAMS, LINTELS, ETC. OR STRUCTURAL WOOD MEMBERS
- PLACEMENT OF WALL OR CEILING INSULATION
- INSTALLATION OF MASONRY BEARING OR CURTAIN WALLS
- PRIOR TO PLACING OF CONCRETE FLOORS
- PRIOR TO INSTALLATION OF ROOFING MATERIALS.
- COMPLETION OF ROOF STRUCTURE BEFORE ROOFING AND INTERIOR FINISHES

d.c. mccloskey engineering ltd.
200-5745 wyandotte street east, windsor, ontario n8x 1m6 tel (519) 977 6800

general notes:

1. THIS PRINT IS AN INSTRUMENT OF SERVICE ONLY AND IS THE PROPERTY OF THE ENGINEER.
2. DRAWINGS SHALL NOT BE SCALED.
3. CONTRACTORS SHALL VERIFY AND BE RESPONSIBLE FOR ALL DIMENSIONS AND CONDITIONS ON THE JOB AND THIS OFFICE MUST BE NOTIFIED OF ANY VARIATIONS FROM THE DIMENSIONS AND CONDITIONS SHOWN BY THESE DRAWINGS
4. ATTENTION IS DIRECTED TO PROVISIONS IN THE GENERAL CONDITIONS REGARDING CONTRACTOR'S RESPONSIBILITIES IN REGARDS TO SUBMISSION OF SHOP DRAWINGS.
5. IN THE EVENT THE DESIGNER IS RETAINED TO REVIEW SHOP DRAWINGS, SUCH REVIEW IS ONLY TO CHECK FOR CONFORMANCE WITH DESIGN CONCEPT AND WITH THE INFORMATION GIVEN IN THE CONTRACT DOCUMENTS
6. CONTRACTORS SHALL PROMPTLY NOTIFY THE DESIGNER IN WRITING OF THE EXISTENCE OF ANY OBSERVED VARIATIONS BETWEEN THE CONTRACT DOCUMENTS AND ANY APPLICABLE CODES OR BY-LAWS
7. THE DESIGNER IS NOT RESPONSIBLE FOR THE CONTRACTOR'S MEANS, METHODS AND OR TECHNIQUES IN THE CONSTRUCTION OF THIS FACILITY.

DETAIL NUMBER
LOCATION SHEET | DETAIL SHEET

DATE (dd/mm/yy)	ISSUED FOR
05/05/17	BULIDING PERMIT
–	–

PROJECT
PROPOSED BUILDING EXPANSION

301 CROFT DRIVE
LAKESHORE, ONTARIO

CLIENT
ECODEVELOPMENTS 2015 INC.

DRAWING TITLE
FOUNDATION PLANS AND DETAILS

DATE :	FEB. 2017
SCALE :	AS NOTED
DRAWN BY :	JLD
CHECKED BY :	DCM
PROJECT FILE NO.	M17-103
DRAWING NO.	S1.1

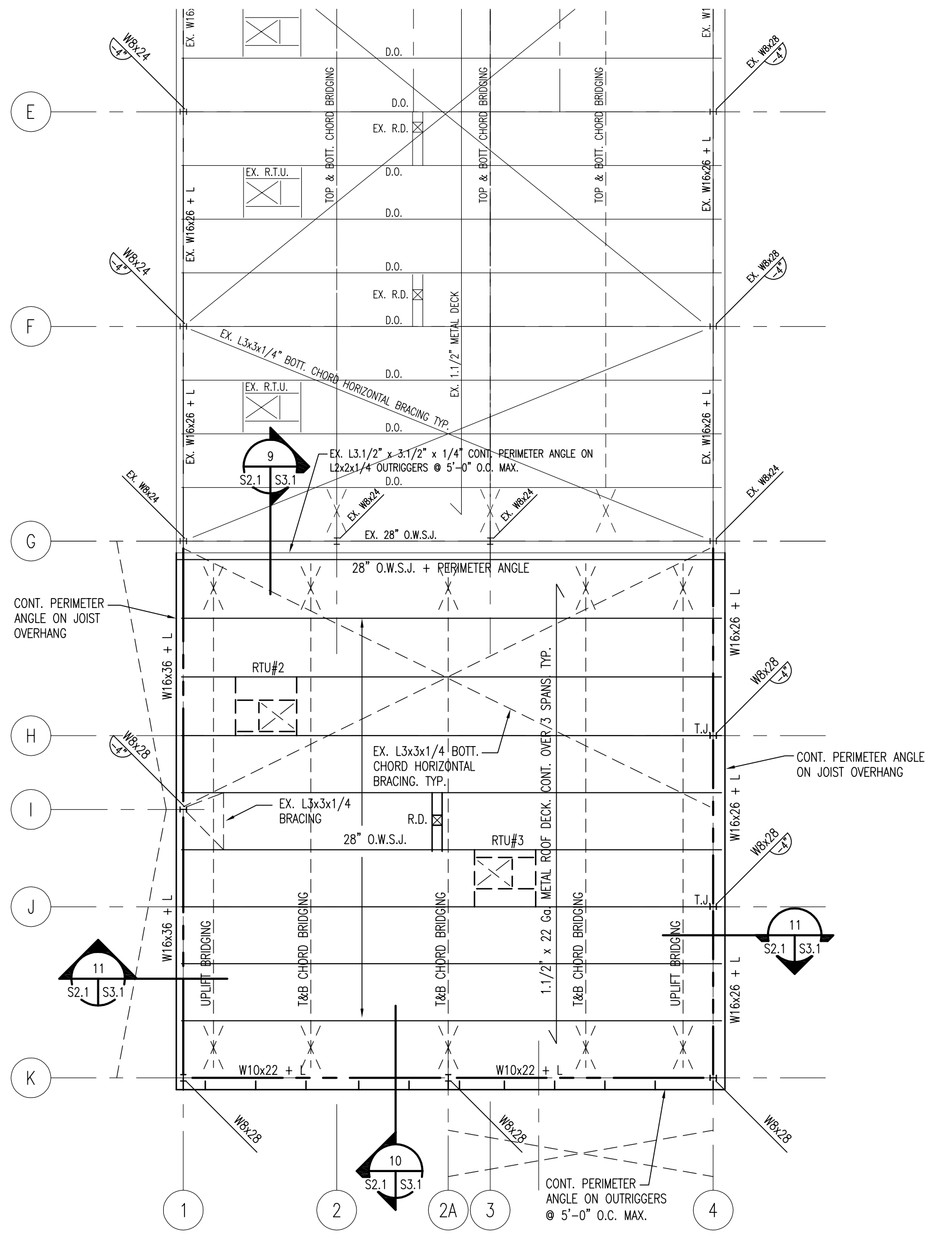

ROOF FRAMING PLAN - SUITE 600

SCALE : 3/32" = 1'-0"

0 2 4 8 16 32 FEET

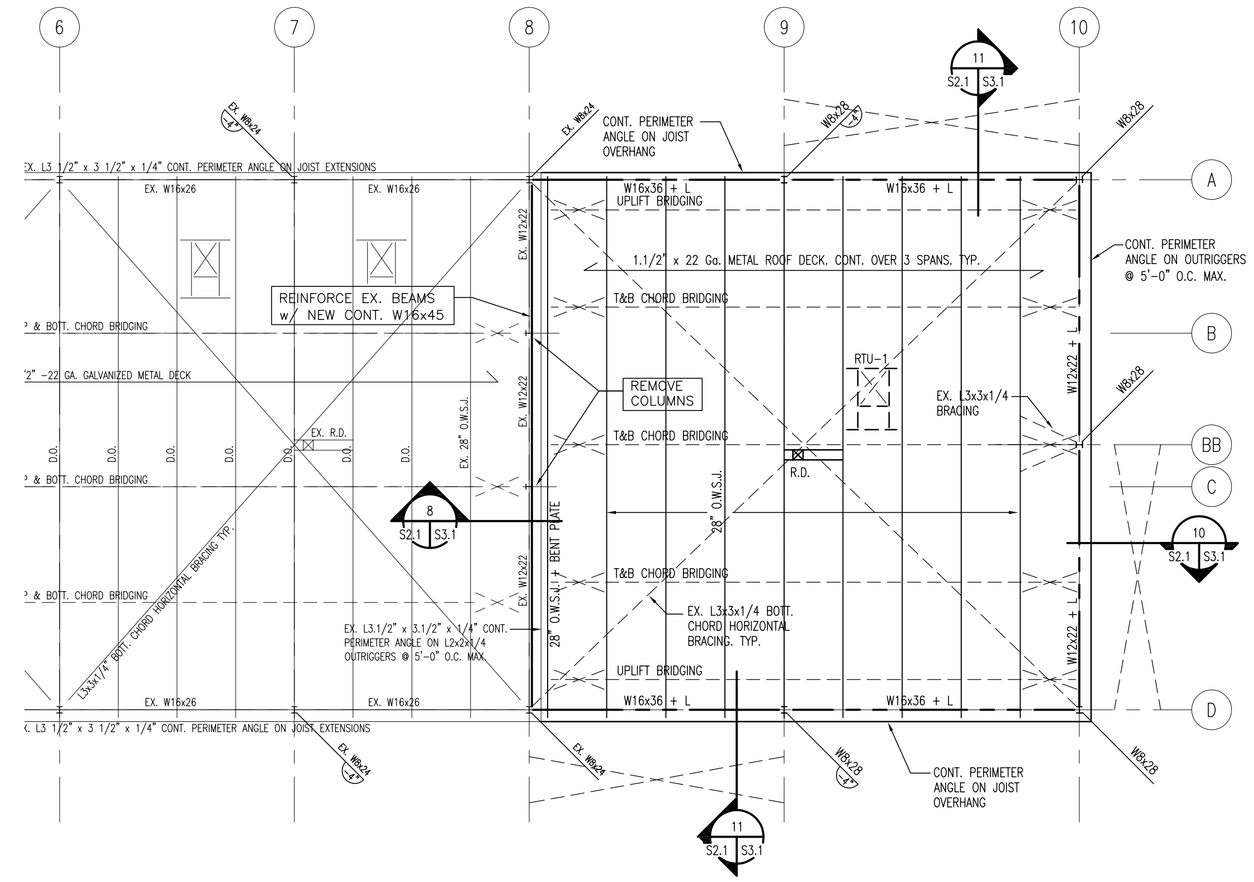

ROOF FRAMING PLAN - SUITE 500

SCALE : 3/32" = 1'-0"

0 2 4 8 16 32 FEET

ROOF DESIGN LOADS:

LIVE LOADS = 22psf + SNOW DRIFTING
DEAD LOADS = 25psf + MECH. UNITS
NET UPLIFT = 12psf
LIVE LOAD DEFLECTION = L/300

SEISMIC LOADS:
Sa(0.2) = 0.18, Sa(0.5) = 0.086,
Sa(1.0) = 0.040, Sa(2.0) = 0.011
Site Class D

T.O.S = 120.66' U.N.O.

TYP. BRACING LOADS FOR CONNECTIONS:
cf = 50 kips

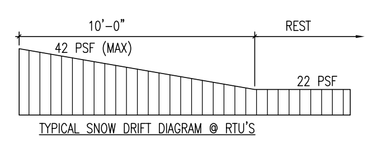

TYPICAL SNOW DRIFT DIAGRAM @ RTU'S

STRUCTURAL STEEL

THE ONTARIO BUILDING CODE 2006 AND CAN/C.S.A. S16.1-01 LATEST EDITION SHALL BE THE BASIS FOR DESIGN, FABRICATION AND ERECTION OF ALL WORK FOR THIS PROJECT.

ALL STRUCTURAL STEEL SHALL CONFORM TO CSA-G40.20/G40.21, GRADE 350W.

UNLESS OTHERWISE NOTED ALL PRINCIPLE CONNECTIONS FOR STRUCTURAL JOINTS SHALL BE MADE WITH 3/4" DIAMETER A.S.T.M. A-325 HIGH TENSILE BEARING TYPE BOLTS.

ANCHOR BOLTS SHALL CONFORM TO A.S.T.M. A-307.

ALL SHOP AND FIELD WELDED CONNECTIONS INCLUDING TRUSSES SHALL BE WELDED WITH E70 ELECTRODES.

ALL BEAM CONNECTIONS ARE TO C.I.S.C. HANDBOOK OF STEEL CONSTRUCTION. TWO ANGLE WELDED CONNECTIONS CAPABLE OF SUPPORTING 1.5 TIMES THE DESIGN REACTION FORCES OR THE STRENGTH OF THE MEMBER WHICHEVER IS SMALLER.

ALL CONNECTIONS SHALL BE DESIGNED AND CERTIFIED BY A PROFESSIONAL ENGINEER OF THE PROVINCE OF ONTARIO. USE BEARING TYPE CONNECTIONS. ALL BRACING CONNECTIONS TO BE SLIP RESISTANT (FRICTIONS-TYPE).

PROVIDE SHELF ANGLES AND/OR CAP PLATES TO SUPPORT METAL DECK AS REQUIRED.

STEEL ERECTOR SHALL PROVIDE TEMPORARY BRACING DURING CONSTRUCTION FOR ALIGNMENT, WIND, DEAD LOAD AND CONSTRUCTION AND SUBSEQUENT REMOVAL OF THE SAME.

VERIFY ALL DIMENSIONS AND FIELD CONDITIONS BEFORE PROCESSING DETAILED SHOP DRAWINGS. NOTIFY THE ENGINEER OF ANY DISCREPANCIES. DO NOT COMMENCE FABRICATION UNTIL CERTIFIED SHOP DRAWINGS HAVE BEEN REVIEWED BY THE ENGINEER.

WHERE NEW STRUCTURAL STEEL MEMBERS FRAME INTO EXISTING STRUCTURAL STEEL, THE CONTRACTORS SHALL REWORK THE EXISTING STRUCTURE AS NECESSARY.

GUSSET PLATES SHALL HAVE A MINIMUM THICKNESS OF 3/8" AT CENTRE OF COLUMNS.

HOLLOW STRUCTURAL SECTIONS TO MEET REQUIREMENTS OF CSA-G40.20/G40.21, GRADE 350W, CLASS C.

COLD FORMED STEEL SECTIONS TO MEET REQUIREMENTS OF CAN/CSA S136-01 INCLUDING SUPPLEMENT CAN/CSA S136-S1-04.

WELDING TO BE DONE BY COMPANIES WITH CANADIAN WELDING BUREAU DIVISION 1 OR DIVISION 2 STANDING. WELDING TO BE DONE BY OPERATORS FULLY APPROVED BY CANADIAN WELDING BUREAU CSA W47-2001. ALL WELDING TO DEVELOP FULL STRENGTH OF MEMBER UNLESS NOTED OTHERWISE. USE E70XX ELECTRODES.

ALL STRUCTURAL STEEL TO RECEIVE ONE COAT OF SHOP PRIMER TO CGSB 1-GP-40M UNLESS NOTED OTHERWISE. TOUCH UP AFTER ERECTION VERIFY PRIMER COLOUR WITH OWNER.

VERIFY ALL DIMENSION ON SITE BEFORE FABRICATION.

COLUMNS TO BE FULLY WELDED TO BASE PLATES.

ALL BEAMS, COLUMNS AND GIRTS ADJACENT TO MASONRY WALLS ARE TO BE ANCHORED AT 32" HORIZONTALLY OR 16" VERTICALLY ON CENTRE UNLESS NOTED OTHERWISE.

ROOF DRAIN FRAMES TO BE L3x3x1/4.

ROOFTOP UNIT FRAMES TO BE L4x4x1/4. MECHANICAL UNIT WEIGHT ASSUMED TO BE 1,600lbs, UNLESS OTHERWISE NOTED. LOCATIONS & WEIGHTS TO BE CONFIRMED WITH MECHANICAL DRAWINGS.

AREA OF CONCRETE PAVERS:
-DESIGN ROOF JOISTS FOR ADDITIONAL 50 POUNDS PER LINEAR FOOT LINE LOAD
-DESIGN METAL DECK FOR ADDITIONAL 25 psf LOAD
-VERIFY LOCATION WITH ARCHITECTURAL DRAWINGS

SHOP DRAWINGS:

GENERAL CONTRACTOR TO SUBMIT SHOP DRAWINGS SEALED BY LICENSED PROFESSIONAL ENGINEER IN ONTARIO FOR THE FOLLOWING:

1. OPEN WEB STEEL ROOF JOISTS.
2. STRUCTURAL STEEL.
3. FOUNDATION REBAR
4. EXTERIOR STEEL STUDS
5. METAL ROOF DECK

OPEN WEB STEEL JOISTS

JOISTS SHALL BE DESIGNED IN ACCORDANCE WITH CAN/C.S.A. STANDARD S16.01 AND C.S.A. STANDARD S136-07 NORTH AMERICAN SPECIFICATION FOR THE DESIGN OF COLD-FORMED STEEL STRUCTURAL MEMBERS. FOR DEPTH OF JOISTS, LOADING AND SPACING, SEE FRAMING PLANS.

LIVE LOAD DEFLECTION NOT TO EXCEED 1/300 OF SPAN FOR ROOF AND 1/360 OF SPAN FOR FLOORS. CONNECTIONS TO SUPPORTING STEEL TO BE WELDED UNLESS NOTED. MAXIMUM ALLOWABLE BEARING PRESSURE ON MASONRY TO BE 250 P.S.I.

JOISTS SUPPLIER TO SUBMIT SHOP DRAWINGS AND CALCULATIONS TO THE ENGINEER FOR APPROVAL DRAWING AND CALCULATIONS TO BE STAMPED BY A LICENSED PROFESSIONAL ENGINEER OF THE PROVINCE OF ONTARIO.

MINIMUM FLAT WIDTH OF THE TOP CHORD SURFACE, WHERE WELDING CONTACT WILL BE MADE, SHALL BE 1.1/2". TOP CHORD MINIMUM THICKNESS SHALL BE 5/32".

JOISTS DESIGN AND LOADING-SEE FRAMING PLANS.

ALL MECHANICAL EQUIPMENT HANGERS, BRACKETS OR RODS MUST BE LOCATED AT JOIST PANEL POINTS.

MINIMUM DEPTH OF BEARING ON MASONRY TO BE 4", AND ON SUPPORTING STEEL 2.1/2".

JOISTS MANUFACTURER TO PROVIDE BRIDGING AS SHOWN ON DRAWINGS OR AS REQUIRED BY MANUFACTURER FOR BRACING OF JOISTS FOR CONSTRUCTION LOADS, DEAD LOAD, LIVE LOAD, WIND LOAD, ETC.

JOISTS SHOES TO BE 5" DEEP UNLESS NOTED OTHERWISE.

PROVIDE TIE JOISTS (T.J.) AS NOTED ON DRAWINGS.

METAL ROOF DECK

METAL ROOF DECK TO BE 1.1/2" x 22 GAUGE (LIGHT ZINC COATED)

INTERIOR WELDING: SHALL BE WELDED TO SUPPORTING STEEL MEMBERS WITH 3/4" DIAMETER FUSION WELDS AT 12" O.C.. (1ST, 3RD, 5TH AND 7TH FLUTES)

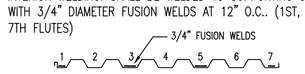

PERIMETER WELDING:
a. TRANSVERSE WELDS AT 6" O.C. (EVERY FLUTE)
b. LONGITUDINAL WELDS AT 12" O.C.
c. SPECIAL JOISTS AND EACH VERTICALLY BRACED FRAME AT 6" O.C.

SIDE LAPS TO BE CRIMPED/PUNCHED AT 12" O.C.

DECKING TO PERFORM AS A STRUCTURAL DIAPHRAGM. PROVIDE ADDITIONAL WELDING AND CONNECTIONS AS REQUIRED TO ENSURE DIAPHRAGM ACTION. Q=350 plf.

METAL DECK TO BE CONTINUOUS OVER THREE SPANS MINIMUM.

CONCRETE MASONRY

ALL MASONRY TO BE CARRIED OUT IN ACCORDANCE WITH THE REQUIREMENTS OF CSA STANDARD A165.1-04 LATEST EDITION.

CONCRETE MASONRY UNITS TO BE MANUFACTURED TO C.S.A. A165.1-04 (BLOCK COMPRESSIVE STRENGTH TO BE 15MPa).

MORTAR TO BE TYPE S FOR ALL BLOCKWORK WITH 9 GAUGE WIRE GALVANIZED HORIZONTAL JOINT REINFORCING EVERY SECOND BLOCK COURSE UNLESS NOTED OTHERWISE.

USE FACE SHELL MORTAR BED AND RUNNING BOND.

GROUT SOLID ALL CELLS CONTAINING REINFORCING STEEL AND ANCHORS.

GROUT COMPRESSIVE STRENGTH TO BE 20 MPa UNLESS OTHERWISE NOTED.

ALL JOINTS TO BE TOOLED TO A DENSE, SLIGHTLY CONCAVE SHADE.

MASONRY TO BE ANCHORED TO ALL STRUCTURAL STEEL BACK-UP AT 16" ON CENTRE VERTICALLY AND 32" ON CENTRE HORIZONTALLY UNLESS NOTED OTHERWISE.

GROUT TWO BLOCKS SOLID BELOW ALL BEAMS BEARING ON MASONRY FOR A WIDTH OF 16" MIN. ALL LINTELS AND BEAMS TO HAVE 8" MIN. BEARING ON MASONRY UNLESS NOTED OTHERWISE.

PROVIDE ALL MASONRY CONNECTORS IN CONFORMANCE WITH CAN/CSA A370-04.

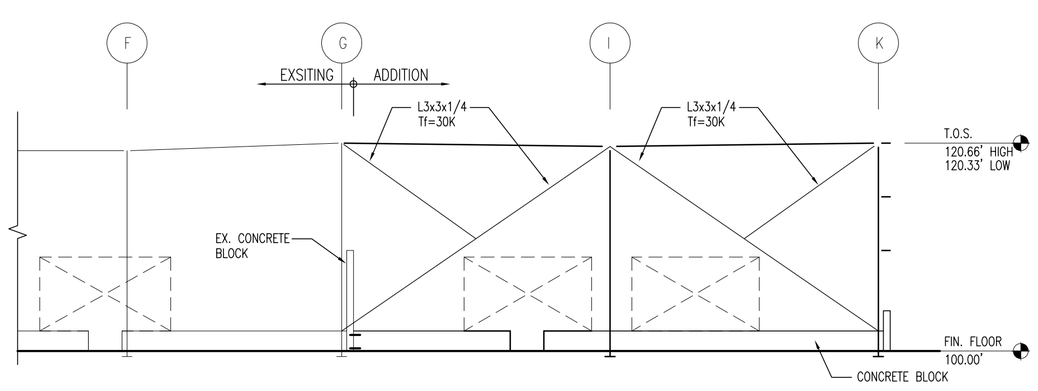

STEEL FRAMING ELEVATION ALONG GRIDLINE '1'

SCALE : 3/32" = 1'-0"

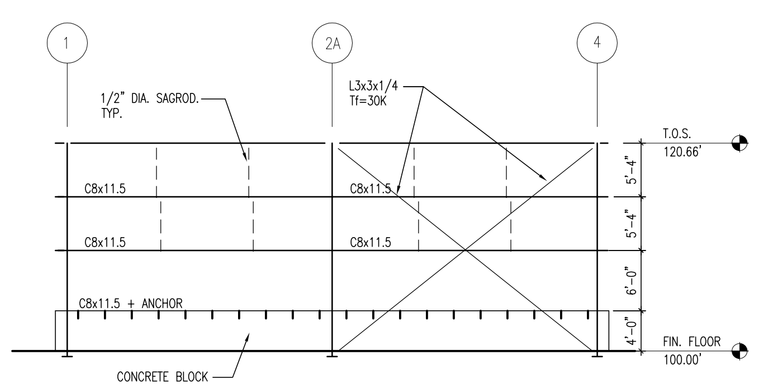

STEEL FRAMING ELEVATION ALONG GRIDLINE 'K'

SCALE : 3/32" = 1'-0"

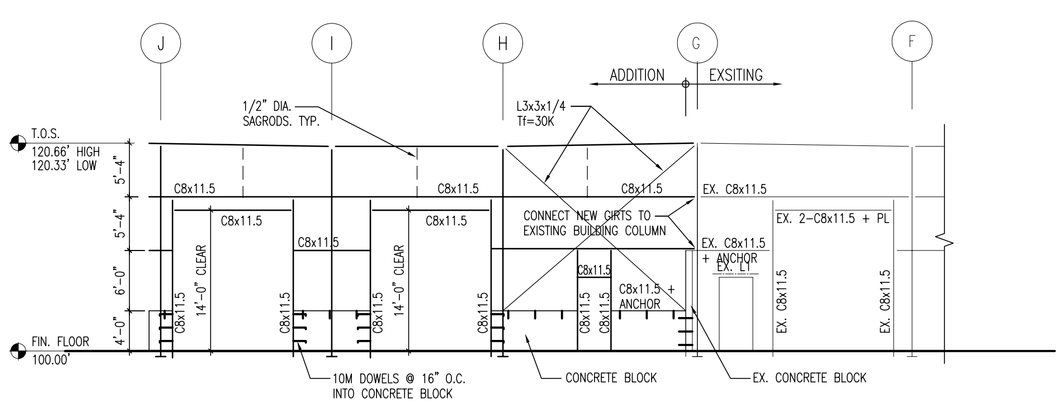

STEEL FRAMING ELEVATION ALONG GRIDLINE '4'

SCALE : 3/32" = 1'-0"

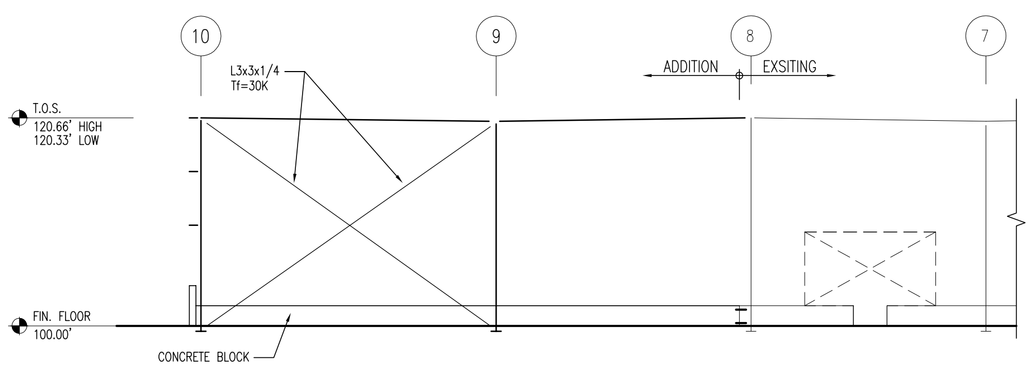

STEEL FRAMING ELEVATION ALONG GRIDLINE 'A'

SCALE : 3/32" = 1'-0"

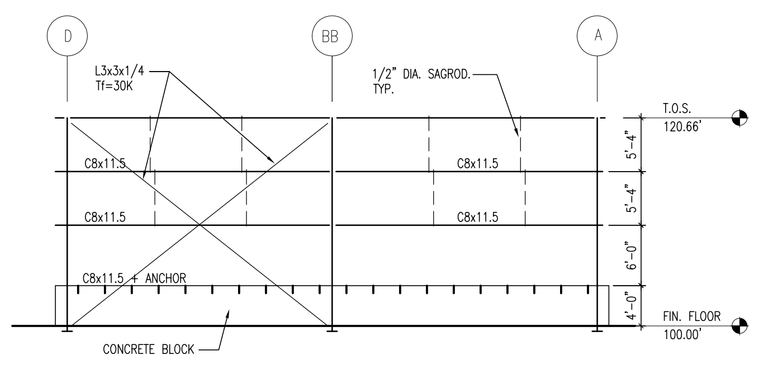

STEEL FRAMING ELEVATION ALONG GRIDLINE '10'

SCALE : 3/32" = 1'-0"

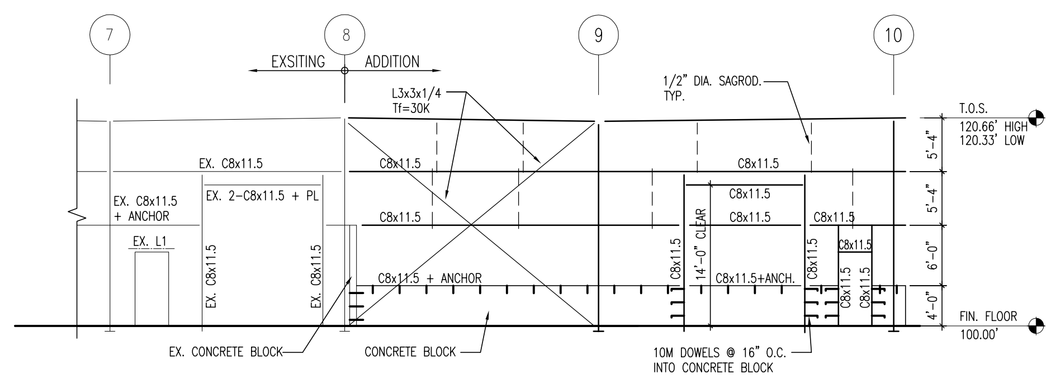

STEEL FRAMING ELEVATION ALONG GRIDLINE 'D'

SCALE : 3/32" = 1'-0"

d.c. mccloskey engineering ltd.
200-5745 wyandotte street east, windsor, ontario n8x 1m6 tel (519) 977 6800

general notes:

1. THIS PRINT IS AN INSTRUMENT OF SERVICE ONLY AND IS THE PROPERTY OF THE ENGINEER.
2. DRAWINGS SHALL NOT BE SCALED.
3. CONTRACTORS SHALL VERIFY AND BE RESPONSIBLE FOR ALL DIMENSIONS AND CONDITIONS ON THE JOB AND THIS OFFICE MUST BE NOTIFIED OF ANY VARIATIONS FROM THE DIMENSIONS AND CONDITIONS SHOWN BY THESE DRAWINGS.
4. ATTENTION IS DIRECTED TO PROVISIONS IN THE GENERAL CONDITIONS REGARDING CONTRACTOR'S RESPONSIBILITIES IN REGARDS TO SUBMISSION OF SHOP DRAWINGS.
5. IN THE EVENT THE DESIGNER IS RETAINED TO REVIEW SHOP DRAWINGS, SUCH REVIEW IS ONLY TO CHECK FOR CONFORMANCE WITH DESIGN CONCEPT AND WITH THE INFORMATION GIVEN IN THE CONTRACT DOCUMENTS
6. CONTRACTORS SHALL PROMPTLY NOTIFY THE DESIGNER IN WRITING OF THE EXISTENCE OF ANY OBSERVED VARIATIONS BETWEEN THE CONTRACT DOCUMENTS AND ANY APPLICABLE CODES OR BY-LAWS
7. THE DESIGNER IS NOT RESPONSIBLE FOR THE CONTRACTOR'S MEANS, METHODS AND OR TECHNIQUES IN THE CONSTRUCTION OF THIS FACILITY.

DETAIL NUMBER
LOCATION SHEET | DETAIL SHEET

DATE (dd/mm/yy)	ISSUED FOR
05/05/17	BUILDING PERMIT
-	-

PROJECT

PROPOSED BUILDING EXPANSION

301 CROFT DRIVE
LAKESHORE, ONTARIO

CLIENT

ECODEVELOPMENTS 2015 INC.

DRAWING TITLE

ROOF FRAMING PLANS AND STEEL FRAMING ELEVATIONS

DATE :	FEB. 2017
SCALE :	AS NOTED
DRAWN BY :	JLD
CHECKED BY :	DCM
PROJECT FILE NO.	M17-103
DRAWING NO.	S2.1

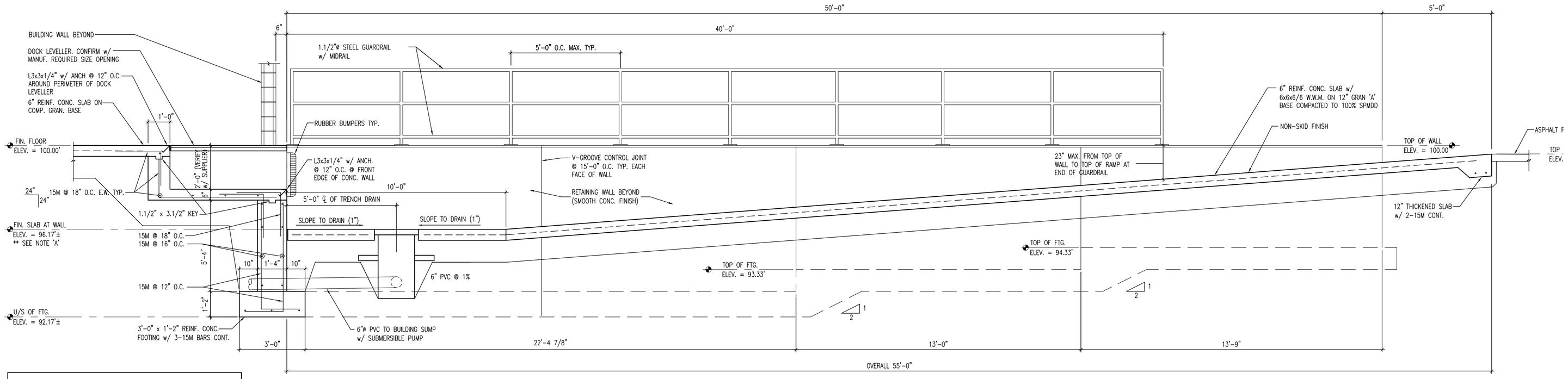

** NOTE 'A':
DEPTH OF ALL LOADING DOCKS SHALL BE VERIFIED BY THE OWNER PRIOR TO PLACING THE LOADING DOCK CONCRETE SLAB.

6 / S1.1 | S3.1 SECTION - FUTURE LOADING DOCK

SCALE : 3/8" = 1'-0"

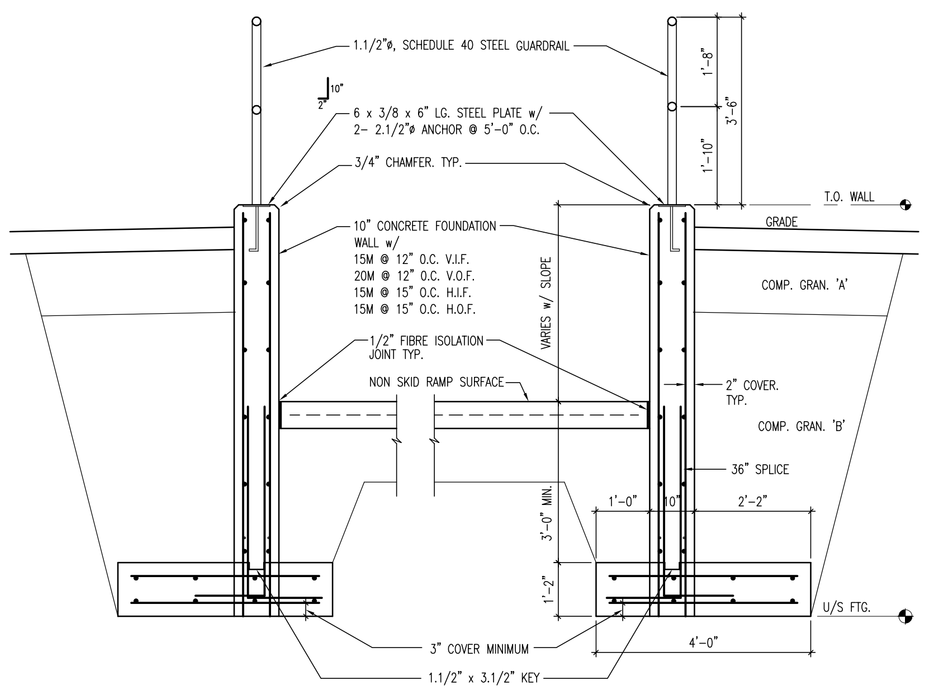

7 / S1.1 | S3.1 SECTION - FUTURE LOADING DOCK

SCALE : 1/2" = 1'-0"

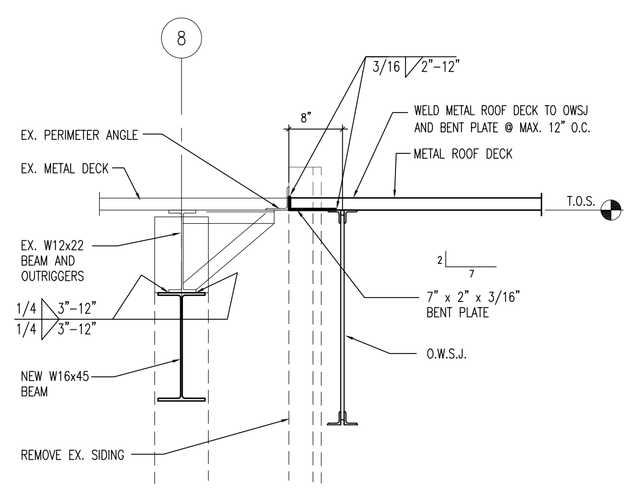

8 / S2.1 | S3.1 SECTION

SCALE : 3/4" = 1'-0"

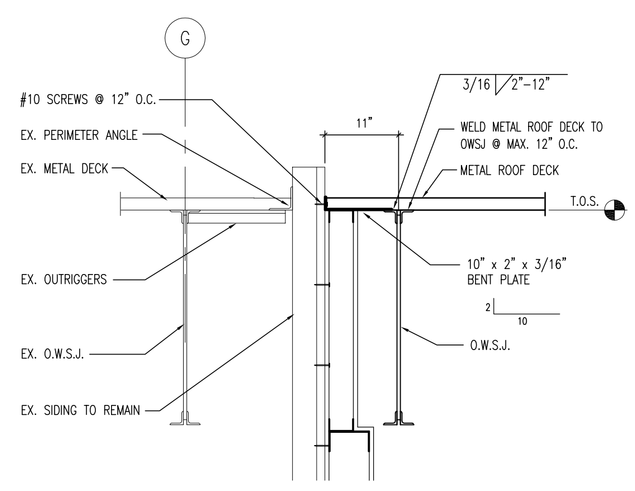

9 / S2.1 | S3.1 SECTION

SCALE : 3/4" = 1'-0"

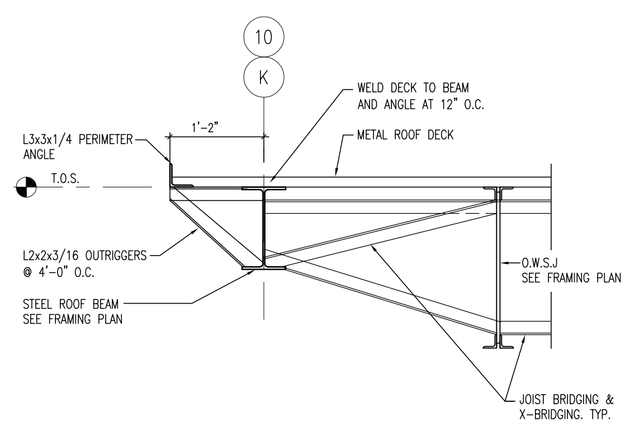

10 / S2.1 | S3.1 SECTION

SCALE : 3/4" = 1'-0"

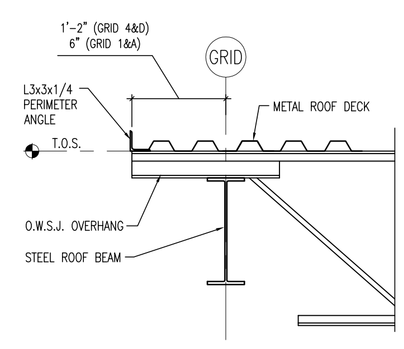

11 / S2.1 | S3.1 SECTION

SCALE : 3/4" = 1'-0"

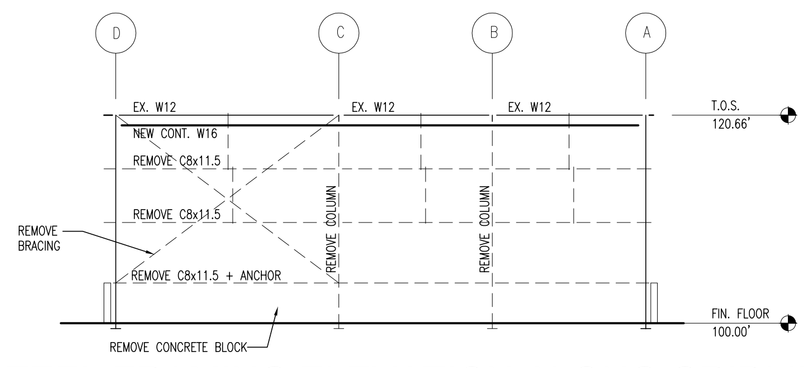

STEEL FRAMING ELEVATION ALONG GRIDLINE '8'

SCALE : 3/32" = 1'-0"

d.c. mccloskey engineering ltd.
200-5745 wyandotte street east, windsor, ontario n8x 1m6 tel (519) 977 6800

general notes:

1. THIS PRINT IS AN INSTRUMENT OF SERVICE ONLY AND IS THE PROPERTY OF THE ENGINEER.
2. DRAWINGS SHALL NOT BE SCALED.
3. CONTRACTORS SHALL VERIFY AND BE RESPONSIBLE FOR ALL DIMENSIONS AND CONDITIONS ON THE JOB AND THIS OFFICE MUST BE NOTIFIED OF ANY VARIATIONS FROM THE DIMENSIONS AND CONDITIONS SHOWN BY THESE DRAWINGS
4. ATTENTION IS DIRECTED TO PROVISIONS IN THE GENERAL CONDITIONS REGARDING CONTRACTOR'S RESPONSIBILITIES IN REGARDS TO SUBMISSION OF SHOP DRAWINGS.
5. IN THE EVENT THE DESIGNER IS RETAINED TO REVIEW SHOP DRAWINGS, SUCH REVIEW IS ONLY TO CHECK FOR CONFORMANCE WITH DESIGN CONCEPT AND WITH THE INFORMATION GIVEN IN THE CONTRACT DOCUMENTS
6. CONTRACTORS SHALL PROMPTLY NOTIFY THE DESIGNER IN WRITING OF THE EXISTENCE OF ANY OBSERVED VARIATIONS BETWEEN THE CONTRACT DOCUMENTS AND ANY APPLICABLE CODES OR BY-LAWS
7. THE DESIGNER IS NOT RESPONSIBLE FOR THE CONTRACTOR'S MEANS, METHODS AND OR TECHNIQUES IN THE CONSTRUCTION OF THIS FACILITY.

DETAIL NUMBER
LOCATION SHEET | DETAIL SHEET

DATE (dd/mm/yy)	ISSUED FOR
05/05/17	BUILDING PERMIT
–	–

PROJECT

PROPOSED BUILDING EXPANSION

301 CROFT DRIVE
LAKESHORE, ONTARIO

CLIENT

ECODEVELOPMENTS 2015 INC.

DRAWING TITLE

LOADING DOCK SECTIONS AND FRAMING DETAILS

DATE :	FEB. 2017
SCALE :	AS NOTED
DRAWN BY :	JLD
CHECKED BY :	DCM
PROJECT FILE NO.	M17-103
DRAWING NO.	S3.1

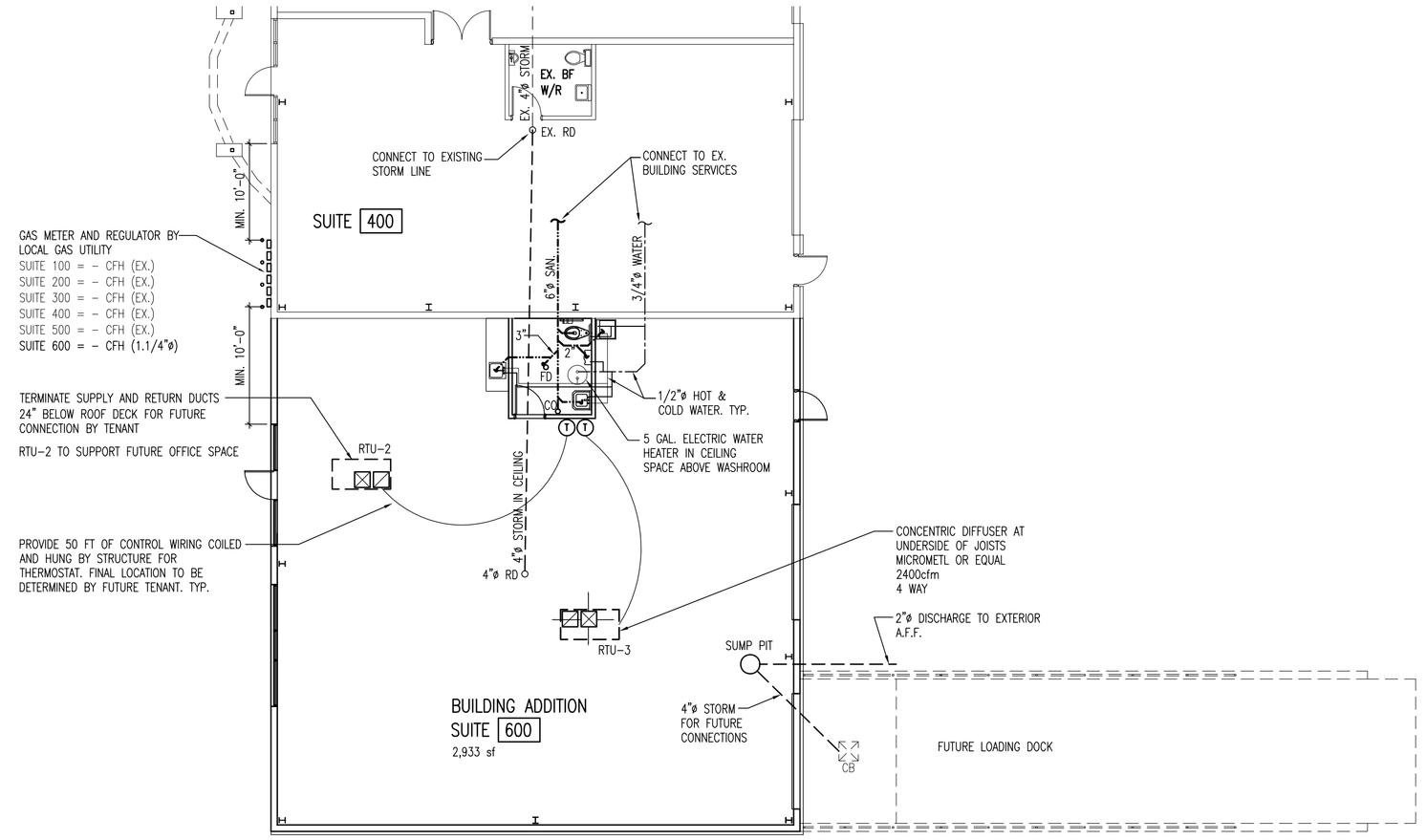

PLUMBING AND HVAC PLAN - SUITE 600

SCALE : 3/32" = 1'-0"

0 2 4 8 16 32 FEET

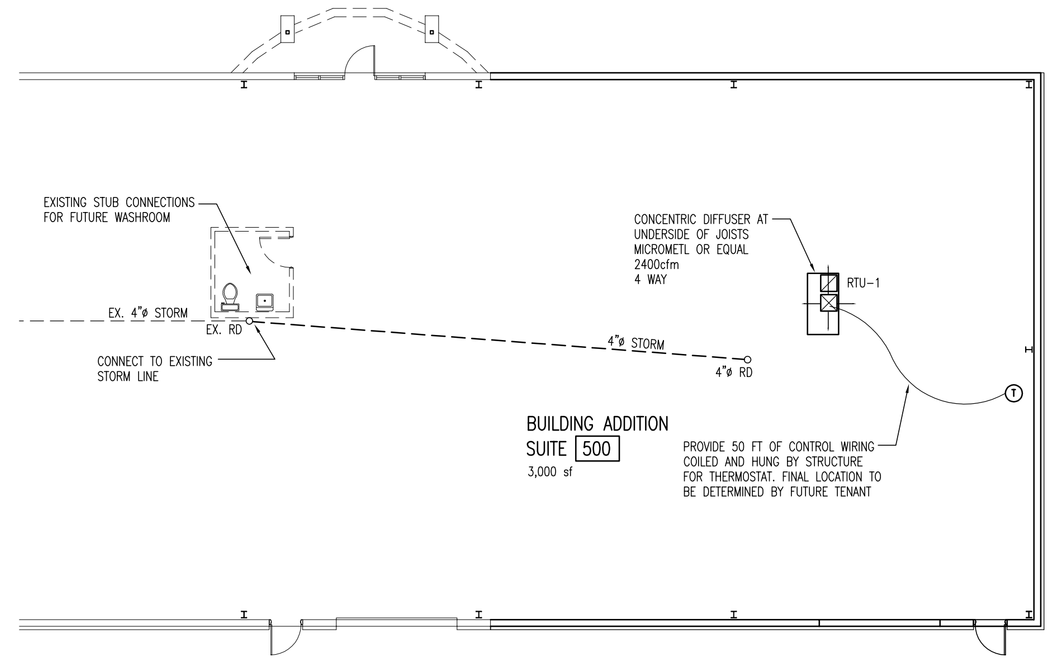

PLUMBING AND HVAC PLAN - SUITE 500

SCALE : 3/32" = 1'-0"

0 2 4 8 16 32 FEET

GENERAL NOTES

1. COMPLETE INSTALLATION SHALL BE IN STRICT ACCORDANCE WITH ALL FEDERAL, PROVINCIAL AND LOCAL CODES AND REGULATIONS AND TO THE SATISFACTION OF ALL AUTHORITIES HAVING JURISDICTION.
2. OBTAIN AND PAY FOR ALL FEES, ALL PERMITS AND LICENCES, AND ALL INSPECTIONS. FINAL CERTIFICATES SHALL BE GIVEN TO OWNER.
3. THIS CONTRACTOR SHALL EXAMINE THE SITE, ARCHITECTURAL, STRUCTURAL AND ELECTRICAL DRAWINGS. VERIFY LOCATION AND SIZE OF EXISTING PIPING AND DUCTWORK IN FIELD AND SATISFY HIMSELF THAT ALL WORK CAN BE SATISFACTORILY CARRIED OUT AS PER DRAWINGS. NO EXTRA WILL BE ALLOWED FOR FAILURE TO HAVE MADE THE EXAMINATION.
4. SUBMIT SHOP DRAWINGS FOR THE FOLLOWING:
   a) HVAC UNITS
   b) EXHAUST FANS
   c) DIFFUSERS, GRILLES AND REGISTERS
5. MECHANICAL AND ELECTRICAL CONTRACTORS SHALL WORK IN CONJUNCTION WITH ONE ANOTHER SO AS TO AVOID INTERFERENCES BETWEEN PIPING, CONDUITS, LIGHT FIXTURES, ETC.
6. ELECTRICIAN TO COMPLETE THE FOLLOWING:
   a) VERIFY LOCATION OF ELECTRICAL PANEL AND PROVIDE SUB PANEL IF REQUIRED. NO ALLOWANCE WILL ME MADE.
   b) CONNECT UNIT TO FIRE PANEL TO SHUT OFF IN THE EVENT OF A FIRE AND RESET WITH THE FIRE PANEL.
7. ALL HVAC EQUIPMENT SHALL MEET MINIMUM EFFICIENCY REQUIREMENTS OF ASHRAE 90.1 (LATEST EDITION).
8. DUCTWORK
   a) PROVIDE ACCESS DOORS IN DUCTWORK AS REQUIRED.
   b) ALL DUCTWORK TAKE OFFS FROM MAIN TRUNK TO HAVE BALANCE DAMPERS.
   c) ALL DUCT SHALL BE CONSTRUCTED OF GALVANIZED MILD STEEL SHEETS TO CORRECT GAUGES AND SUPPORTED ALL IN ACCORDANCE WITH THE LATEST STANDARDS AND RECOMMENDATIONS PUBLISHED BY ASHRAE AND SMACNA FOR LOW PRESSURE SYSTEMS.
   d) SEAL ALL DUCT AS PER SMACNA SEAL CLASS 'C'.
   e) PROVIDE VOLUME CONTROL DAMPERS WITH QUADRANT LOCKING DEVICE AND DEFLECTING VANES AS SHOWN ON THE DRAWINGS AND/OR AS MAY BE REQUIRED TO CONTROL VOLUME AND DIRECTION OF AIR AND FOR BALANCING SYSTEM.
9. INSULATION
   a) PROVIDE INTERNAL SOUND INSULATION FROM AIR CONDITIONING UNIT TO LIMITS SHOWN ON DRAWINGS
   b) INSULATE SUPPLY AND RETURN AIR DUCTS IN CEILING SPACE WITH 1" THICK FLEXIBLE FIBERGLASS INSULATION WITH VAPOUR BARRIER.
   c) INSULATE EXHAUST AIR DUCT TO MIN. 5'-0" FROM ROOF / WALL DISCHARGE TO PREVENT CONDENSATION. 1" THICK FLEXIBLE FIBERGLASS INSULATION WITH VAPOUR BARRIER.
   d) INSULATE OUTSIDE AIR DUCT TO PREVENT CONDENSATION. 1" THICK FLEXIBLE FIBERGLASS INSULATION WITH VAPOUR BARRIER.
10. ALL TEMPERATURE CONTROL WIRING FOR MECHANICAL EQUIPMENT SHALL BE BY MECHANICAL CONTRACTOR.
11. GAS PIPING - STANDARD WEIGHT BLACK STEEL PIPE WITH MALLEABLE IRON FITTINGS. SCREWED JOINTS FOR PIPING UP TO 2". PIPE 2.1/2" AND LARGER SHALL HAVE WELDED JOINTS WITH STANDARD STEEL FITTINGS.
12. AT COMPLETION OF JOB TURN OVER TO OWNER TWO COMPLETE MAINTENANCE MANUALS.
13. PROVIDE AIR BALANCING REPORT BY INDEPENDENT INSPECTING AGENCY.

PLUMBING AND DRAINAGE

1. UNDERGROUND STORM AND SANITARY PIPING - PVC OR ABS PLASTIC DRAINAGE PIPING AND FITTINGS WHERE APPROVED BY LOCAL AUTHORITIES.
2. ABOVE GROUND STORM AND SANITARY PIPING - STANDARD WEIGHT CAST IRON WITH 'MJ' JOINTS, OR 'IPEX' SYSTEM XFR FIRE RETARDANT PVC PLASTIC DRAINAGE PIPING AND FITTINGS WHERE APPROVED BY LOCAL AUTHORITIES.
3. WASTE AND VENT PIPING - 'DWV' COPPER PIPING WITH SOLDER FITTINGS, OR 'IPEX' SYSTEM XFR FIRE RETARDANT PVC PLASTIC DRAINAGE PIPING AND FITTINGS WHERE APPROVED BY LOCAL AUTHORITIES.
4. WATER PIPING - ABOVE GROUND WATER PIPING TO BE PEX.
5. HOT AND COLD WATER PIPING - TYPE 'L' COPPER PIPING WITH WROUGHT COPPER SOLDER FITTINGS. EXPOSED WATER PIPING IN WASHROOMS SHALL BE CHROME PLATED BRASS. BRANCH WATER PIPING MAY BE 'XITEC' COMPSITE PIPING INSTALLED AS PER MANUFACTURER'S INSTRUCTIONS.
6. NO COMBUSTIBLE PIPING MATERIAL SHALL BE USED IN CEILING RETURN PLENUM.
7. PROVIDE AND INSTALL FIRE STOP DEVICE WHERE COMBUSTIBLE PIPING PENETRATES A FIRE SEPARATION AS PER O.B.C.
8. INSULATE DOMESTIC COLD WATER PIPING WITH 1" THICK FIBREGLASS PIPE INSULATION WITH VAPOUR BARRIER TO PREVENT CONDENSATION.
9. INSULATE DOMESTIC HOT WATER PIPING WITH FIBREGLASS PIPE INSULATION WITH INTEGRAL JACKET. INSULATION SHALL BE 1" THICK FOR PIPING UP TO 2" AND 1-1/2" THICK FOR PIPING 2-1/2" AND LARGER.
10. INSULATE HORIZONTAL RAINWATER CONDUCTOR INCLUDING UNDERSIDE OF ROOF DRAIN. INSULATION SHALL BE 1" THICK FIBREGLASS INSULATION WITH VAPOUR BARRIER.
11. PROVIDE AND INSTALL CAPPED AIR CHAMBERS AT LEAST 18" LONG, OR WATER HAMMER ARRESTORS, AT EACH FIXTURE OR FIXTURE GROUP, AND WHEREVER ELSE NECESSARY TO PREVENT WATER HAMMER.
12. ALL WATER HEATERS SHALL MEET THE MINIMUM EFFICIENCY REQUIREMENTS OF ASHRAE 90.1 (LATEST EDITION).
12. INSTALL INSULATED HEAT TRAP ON BOTH INLET AND OUTLET OF WATER HEATER IN ACCORDANCE WITH ASHRAE 90.1 (LATEST EDITION)
13. PROVIDE VENTING FOR ALL DRAIN PIPING SHOWN AS PER ONTARIO BUILDING CODE PART 7 - PLUMBING
14. PROVIDE BACK SIPHONAGE FOR ALL PIPING SHOWN AS PER ONTARIO BUILDING CODE PART 7 - PLUMBING
16. PROVIDE FLOOR DRAINS IN EACH WASHROOM. ALL PIPING AS PER ONTARIO BUILDING CODE PART 7 - PLUMBING.
17. PROVIDE PIPING AS NOTED. WHERE SIZE OF COLD WATER PIPING IS NOT INDICATED, MIN. SIZE IS 1.1/4"ø.

ROOFTOP UNIT SCHEDULE

TAG	MAKE	MODEL	NOMINAL TONS	ESP (in w.g)	S/A (CFM)	O/A (CFM)	HP	COOLING INPUT (MBH)	COOLING OUTPUT (MBH)	HEATING INPUT (MBH)	HEATING OUTPUT (MBH)	VOLTAGE	MCA	WEIGHT	REMARKS
RTU #1	YORK	ZF072N10N05	6.0	0.5	2,400	15%	1.1/2	-	-	-	-	575/3/60	-	640 lbs	SET OUTDOOR AIR TO MIN. 10%, MAX. 15%, C/W SINGLE STAGE HEAT / SINGLE STAGE COOL, 1" DISPPOSABLE FILTER, GLAVANIZED STEEL DRAIN PAN, ROOF CURB. OPTIONS: SINGLE ENTHALPY ECONOMIZER & HOOD OR MANUAL OUTSIDE AIR DAMPER w/ HOOD
RTU #2 & 3	YORK	ZF048N10N05	4.0	0.5	1,600	15%	1.1/2	-	-	-	-	575/3/60	-	570 lbs	

EXHAUST FAN SCHEDULE

TAG	MAKE	MODEL	- (CFM)	ESP (in w.g)
EF1	BROAN	-	100	0.5

PLUMBING FIXTURE SCHEDULE

FIXTURE	CW	HW	WASTE	VENT	MAKE	MODEL
WATER CLOSET (BARRIER FREE)	1/2"	-	3"	1.1/2"	AMERICAN STANDARD	'CADET' 2.377-100 PRESSURE ASSIST OR CRANE EQUAL (6 LITRE), 16" HIGH, ELONGATED BOWL WITH TANK. CENTOCO #500CC SOLID PLASTIC OPEN FRONT SEAT OR OLSONITE EQUAL
URINAL	3/4"	-	2"	1.1/2"	AMERICAN STANDARD	'WASHBROOK' 6501-010 EQUAL WALL HUNG W/ INTEGRAL TRAP AND 3/4" TOP SPUD OR CRANE EQUAL. SLOAN 'ROYAL' 186-1 OR EQUAL FLUSH VALVE W/ VACUUM BREAKER (3.8 LITRE)
LAVATORY (BARRIER FREE)	1/2"	1/2"	1.1/4"	1.1/4"	AMERICAN STANDARD	MURRO UNIVERSAL DESIGN WALL HUNG SINK WITH EVERCLEAN #0954. DELTA #501WF SINGLE LEVER HANDLE OR MOEN EQUAL. TRUEBRO 'LAV-GUARD' UNDER SINK PROTECTION ASSEMBLY.
FLOOR DRAIN	-	-	3"	1.1/2"	WATTS	FD-100 FOR FINISHED FLOORS AND FD-200 FOR UNFINISHED FLOORS (OR EQUAL), EPOXY COATED CAST IRON FLOOR DRAIN WITH NICKLE BRONZE STRAINER, SEDIMENT BUCKET, TRAP PRIMER CONNECTION. PROVIDE MIFAB TRAP SEAL PRIMER. PROVIDE TRAP PRIMER CONNECTION FROM LAVATORY.
CLEANOUTS	-	-	3"	-	WATTS	
ROOF DRAIN	-	-	3"	-	WATTS	RD-100 OR EQUAL EPOXY COATED CAST IRON ROOF DRAIN WITH DEEP SUMP, FLASHING FLANGE, FLASHING CLAMP DEVICE, INTEGRAL GRAVEL STOP AND SELF LOCKING DOME STRAINER.
LAUNDRY TUB	1/2"	1/2"	1.1/2"	1.1/2"	TECHNOFORM	#TLTG TECHNOFORM GRANIT GRAY POLYPROPYLENE UTILITY TUB, 24 x 22
KITCHEN SINK	1/2"	1/2"	1.1/2"	1.1/2"	KINDRED	QSL1719 OR EQUAL STAINLESS STEEL, SINGLE BOWL, LEDGE BACK C/W STRAINER. DELTA #100WF SINGLE LEVER HANDLE OR MOEN EQUAL.

NOTE: ALL PLUMBING FIXTURES TO BE CONFIRMED BY OWNER. PROVIDE SPECIFICATIONS FOR OWNER REVIEW

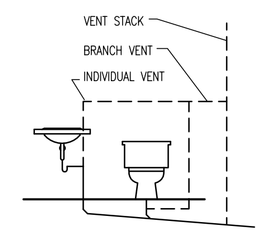

BRANCH VENT DETAIL AT FIXTURES

NOT TO SCALE

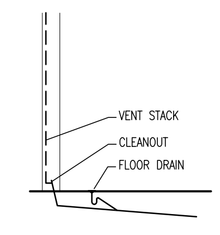

BRANCH VENT DETAIL AT FLOOR DRAIN

NOT TO SCALE

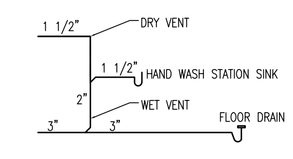

VENT PIPES & WET VENTS

NOT TO SCALE

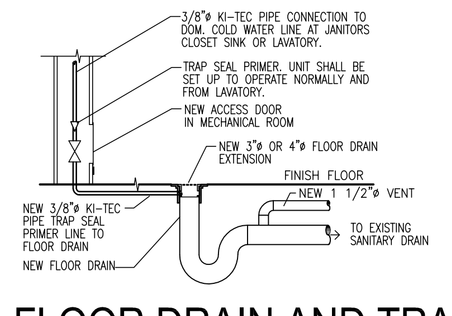

FLOOR DRAIN AND TRAP SEAL PIPING DETAIL

NOT TO SCALE

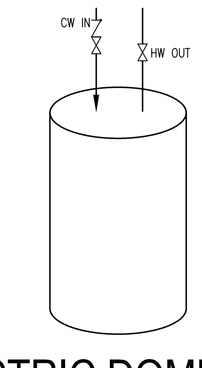

ELECTRIC DOMESTIC HOT WATER HEATER

NOT TO SCALE

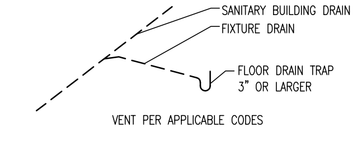

VENT PIPES FOR TRAPS

NOT TO SCALE

d.c. mccloskey engineering ltd.
200-5745 wyandotte street east, windsor, ontario n8x 1m6 tel (519) 977 6800

general notes:

1. THIS PRINT IS AN INSTRUMENT OF SERVICE ONLY AND IS THE PROPERTY OF THE ENGINEER.
2. DRAWINGS SHALL NOT BE SCALED.
3. CONTRACTORS SHALL VERIFY AND BE RESPONSIBLE FOR ALL DIMENSIONS AND CONDITIONS ON THE JOB AND THIS OFFICE MUST BE NOTIFIED OF ANY VARIATIONS FROM THE DIMENSIONS AND CONDITIONS SHOWN BY THESE DRAWINGS
4. ATTENTION IS DIRECTED TO PROVISIONS IN THE GENERAL CONDITIONS REGARDING CONTRACTOR'S RESPONSIBILITIES IN REGARDS TO SUBMISSION OF SHOP DRAWINGS.
5. IN THE EVENT THE DESIGNER IS RETAINED TO REVIEW SHOP DRAWINGS, SUCH REVIEW IS ONLY TO CHECK FOR CONFORMANCE WITH DESIGN CONCEPT AND WITH THE INFORMATION GIVEN IN THE CONTRACT DOCUMENTS
6. CONTRACTORS SHALL PROMPTLY NOTIFY THE DESIGNER IN WRITING OF THE EXISTENCE OF ANY OBSERVED VARIATIONS BETWEEN THE CONTRACT DOCUMENTS AND ANY APPLICABLE CODES OR BY-LAWS
7. THE DESIGNER IS NOT RESPONSIBLE FOR THE CONTRACTOR'S MEANS, METHODS AND OR TECHNIQUES IN THE CONSTRUCTION OF THIS FACILITY.

DETAIL NUMBER
LOCATION SHEET | DETAIL SHEET

DATE (dd/mm/yy)	ISSUED FOR
05/05/17	BUILDING PERMIT
-	-

PROJECT

PROPOSED BUILDING EXPANSION

301 CROFT DRIVE
LAKESHORE, ONTARIO

CLIENT

ECODEVELOPMENTS 2015 INC.

DRAWING TITLE

PLUMBING PLANS, DETAILS AND HVAC

DATE :	FEB. 2017
SCALE :	AS NOTED
DRAWN BY :	BC
CHECKED BY :	DCM
PROJECT FILE NO.	M17-103
DRAWING NO.	M1.1