SECTION 08505 – ALUMINUM WINDOWS

A. PART 1 – GENERAL
1.01 – WORK INCLUDED:
- ALUMINUM EXTERIOR WINDOWS
- 1.02 – SUBMITTALS
- SHOP DRAWINGS: SUBMIT DETAILED SHOP DRAWINGS SHOWING WINDOW ELEVATIONS, PLAN DRAWINGS, FULL SIZE DETAILS, HARDWARE REQUIRED, AND ANCHORING DETAILS.
- PRODUCT DATA: INDICATE MATERIALS, FINISHES AND INSTALLATION PROCEDURES RECOMMENDED BY MANUFACTURER. INDICATE COMPLIANCE WITH SPECIFIED DESIGN CRITERIA. INCLUDE SPECIFIC GLAZING DETAILS.
- SAMPLES: SUBMIT SAMPLES OF ALUMINUM MATERIALS.
- GLASS MANUFACTURER'S APPROVAL: INDICATE ON SHOP DRAWINGS OR BY LETTER PRIOR TO SHOP DRAWING SUBMITTAL THAT AN AUTHORIZED REPRESENTATIVE OF SELECTED GLASS MANUFACTURER HAS REVIEWED AND APPROVED DETAILS INCLUDING GLASS BITE, SUPPORT, CLEARANCES AND GLAZING METHODS.

1.04 QUALITY ASSURANCE
- FABRICATE AND INSTALL WINDOWS IN ACCORDANCE WITH ANSI/AAMA 402.9.

1.05 – DELIVERY, STORAGE, AND HANDLING
- DELIVER MATERIALS TO THE SITE IN THEIR ORIGINAL, TIGHTLY SEALED CONTAINERS, ALL CLEARLY LABELED WITH MANUFACTURER'S NAME, PRODUCT IDENTIFICATION AND LOT NUMBER.
- SAFELY STORE MATERIALS IN THEIR ORIGINAL CONTAINERS OUT OF THE WEATHER AND WHERE THE TEMPERATURES ARE WITHIN THE LIMITS SPECIFIED BY THE MANUFACTURER.
- ALL MATERIALS SHALL BE STORED IN COMPLIANCE WITH APPLICABLE FIRE AND SAFETY REQUIREMENTS.
- PROTECT MATERIALS FROM DAMAGE DURING TRANSIT, HANDLING, STORAGE AND INSTALLATION. CONTRACTOR SHALL PROVIDE SECURE SITE STORAGE TRAILERS.

1.06 – WARRANTY
- PROVIDE FIVE YEAR WARRANTY UNDER PROVISIONS OF THE GENERAL CONDITIONS INCLUDING COVERAGE FOR INSULATED GLASS UNITS.

B. PART 2 – PRODUCTS
REBCO SERIES 25000 OR APPROVED EQUAL.
MATERIALS
- FRAMING: THE WINDOWS SHALL BE FABRICATED FROM EXTRUDED ALUMINUM ALLOY 60B3–T5. ALL MEMBERS SHALL BE A MINIMUM 4" IN DEPTH. ALL FRAME AND VENT SECTIONS SHALL BE TUBULAR EXTRUSIONS WITH A MINIMUM 3/15 IN COMBINED WALL SECTIONS. GLAZING BEADS SHALL HAVE A THICKNESS OF NOT LESS THAN .045". WINDOW SECTIONS SHALL HAVE A MINIMUM GLAZING LEG 3/4" AND THEY SHELL BE PROVIDED WITH SNAP–ON ALUMINUM GLAZING HEADS.
- GLAZING: MINIMUM 1" INSULATED UNITS WITH LOW E COATING ON SURFACE 2. TEMPERED GLASS AT DOOR AND PANELS.

CONSTRUCTION. U VALUE OF 0.38 OR BETTER. SHGC VALUE OF 0.38 OR BETTER.
- FRAME AND VENT CORNERS SHALL BE AND MECHANICALLY CRIMPED AND EPOXY GLUED UNDER SEVERAL TONS OF PNEUMATIC FORCE. MUNTIN BARS AND MEETING RAILS SHALL BE COPED TO CREATE A MORTISED AND TENONED JOINT WHICH SHALL HE ARGON–ELECTRIC WELDED TO INSURE MAXIMUM STRENGTH.

FINISH
- THE FINISHED UNITS SHALL BE SUPPLIED BY THE WINDOW MANUFACTURER. THE FINISH SHALL BE DARK BRONZE HARDCOAT POLYESTER ELECTROSTATICALLY APPLIED PAINT.

THERMAL BARRIER
- THE THERMAL HARRIER SHELL CONSIST OF A TWO–PART, CHEMICALLY CURING. HIGH STRENGTH, PURE POLYURETHANE CASTING RESIN. THIS THERMAL BARRIER SHALL PROVIDE A CONTINUOUS UNINTERRUPTED BREAK AROUND THE ENTIRE PERIMETER OF THE FRAME AND VENT AND IT SHALL NOT BE ABRIDGED BY ANY METALS, CONDUCTORS OR OTHER SIMILAR MATERIALS. THE CAVITY SIZE OF THE THERMAL BREAK SHALL BE .744" WIDE,. 350" HIGH AND SHALL HAVE A THROAT OPENING OF AT LEAST .312" WIDE. RESIDENTIAL SIZE CAVITIES WILL NOT BE PERMITTED.

C. EXECUTION
3.01 EXAMINATION AND PREPARATION
- VERIFY THAT ROUGH OPENINGS ARE CORRECTLY SIZED AND LOCATED.
- CAREFULLY REMOVE ALL EXISTING WINDOW UNITS.
- PREPARE OPENING TO PERMIT CORRECT INSTALLATION OF FRAME AND ACHIEVE CONTINUITY OF AIR AND VAPOR BARRIER SEAL.

3.02 INSTALLATION
- INSTALL FRAMES, GLAZING, HARDWARE AND FLASHINGS IN ACCORDANCE WITH MANUFACTURER'S INSTRUCTIONS.
- USE ANCHORAGE DEVICES TO SECURELY ATTACH FRAMES TO STRUCTURE.
- ALIGN ASSEMBLY PLUMB AND LEVEL, FREE OF WARP OR TWIST. MAINTAIN ASSEMBLY DIMENSIONAL TOLERANCES, ALIGNING WITH ADJACENT WORK.
- COORDINATE ATTACHMENT AND SEAL OF AIR AND VAPOR BARRIER MATERIALS. PACK FIBROUS INSULATION IN SHIM SPACES AT PERIMETER OF ASSEMBLY TO MAINTAIN CONTINUITY OF THERMAL BARRIER.
- INSTALL GLASS USING EXTERIOR COMBINATION DRY METHOD OF GLAZING.
- INSTALL PERIMETER TYPE SEALANT, BACKING MATERIALS.
- PROTECTION AND CLEANING – UPON COMPLETION OF ERECTION WINDOWS WILL BE IN A CLEAN CONDITION. PROTECTION
- AGAINST DAMAGE BY OTHERS AND FINISH CLEANING SHALL BE THE RESPONSIBILITY OF THE GENERAL CONTRACTOR

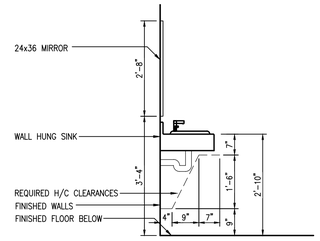


## 1 / A2 Lavatory Detail
NTS

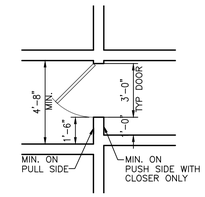


## 2 / A2 Typical Public Door
Scale: 1/4"=1'-0"

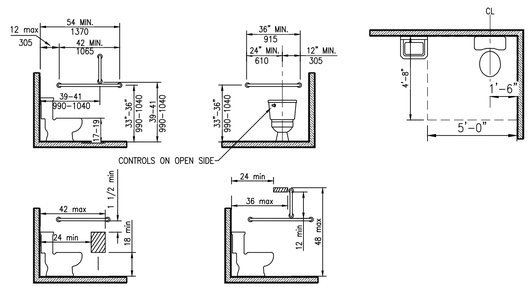


## 3 / A2 Toilet Details
NTS

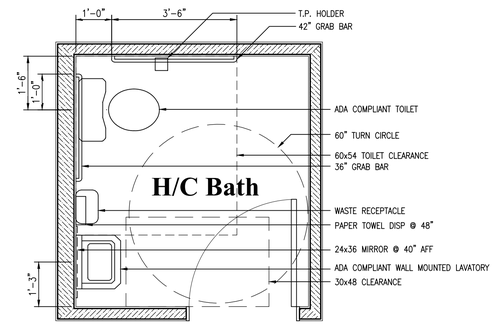


## 4 / A2 Bath Detail
Scale: 1/2"=1'-0"

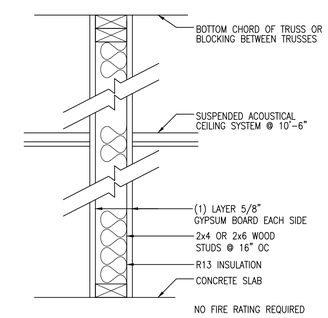


## 5 / A2 Typical Interior Wall
Scale: 1 1/2"=1'-0"

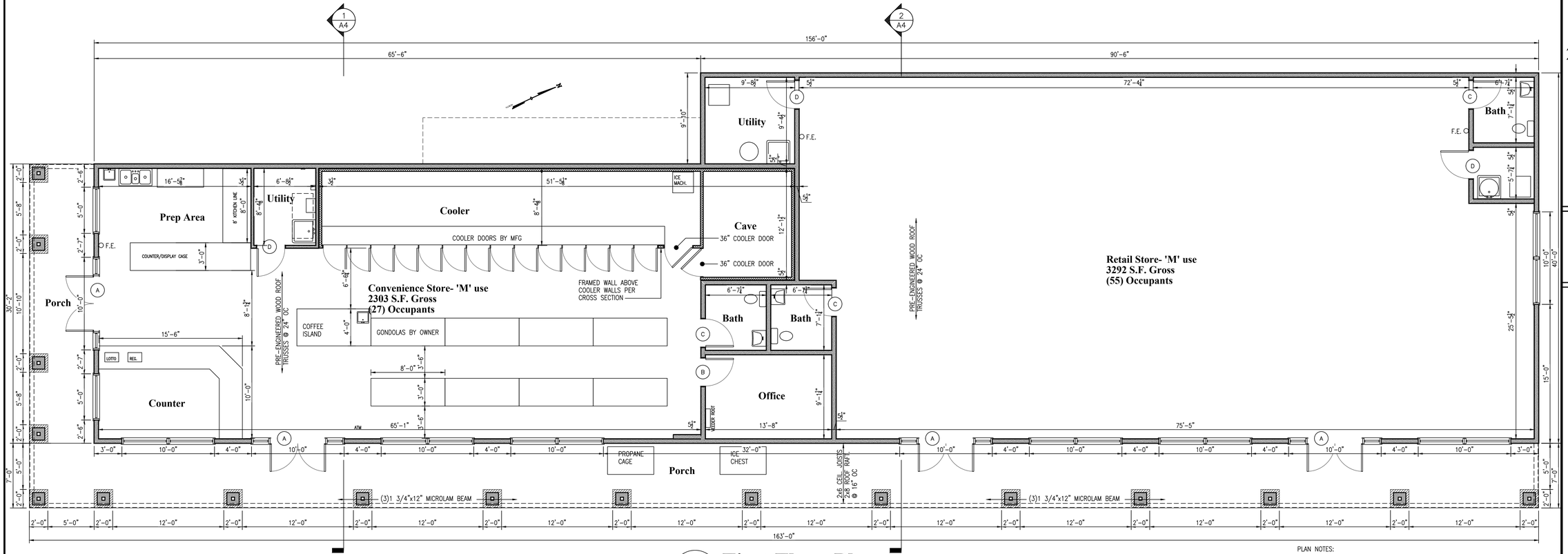


## 6 / A2 First Floor Plan
Scale: 3/16"=1'-0"

PLAN NOTES:
1. ALL DIMENSIONS ARE TO FRAMING.
2. SEE PAGE E1 FOR REFLECTED CEILING SCHEMATIC.


COPPOLA ASSOCIATES
"Design, Architecture & Planning"
6 Old North Plank Road
Suite 101
Newburgh, NY 12550
TEL: 845-561-3559
FAX: 845-561-2051
ajcoppola@coppola-associates.com


REGISTERED ARCHITECT ANTHONY J. COPPOLA STATE OF NEW YORK 018849

LICENSE NUMBER: 018849

" PROPOSED RETAIL BUILDING FOR "

**230 Church Ave LLC**

Ballston Spa, NY

**FIRST FLOOR PLAN & DETAILS**

REVISIONS

DATE
9/29/21

PROJECT NUMBER
19-18

SHEET NUMBER
A2