STRUCTURAL NOTES

BUILDER / CONTRACTOR IS RESPONSIBLE FOR ENSURING THAT PLANS AND SPECIFICATIONS COMPLY WITH APPLICABLE REQUIREMENTS OF ANY GOVERNING BUILDING AUTHORITY.

METAL BUILDING STRUCTURE DESIGNED PER THE FOLLOWING LOADING:

- CODE: IBC 2012
- WIND: 115 MPH EXPOSURE C WINDLOAD
- ROOF LIVE LOAD: 20 PSF ROOF LIVE LOAD
- SEISMIC DESIGN CATEGORY (SDC): C / SEISMIC COEFFICIENT: 0.61
- GROUND SNOW LOAD: 10 PSF (MAX) GROUND SNOW LOAD
- ROOF SNOW LOAD: 8.4 PSF (MAX) ROOF SNOW LOAD
- COLLATERAL LOAD: 0.5 PSF (MAX) COLLATERAL LOAD

DESIGN LOADS DESIGNATED WITHIN CONTRACT AND DRAWINGS DO NOT ALLOW FOR ANY TYPE OF SUSPENDED SYSTEM (E.G. LIGHTS, INSULATION, DUCT WORK, PIPING, ETC.) GREATER THAN THE COLLATERAL LOAD SHOWN. SUSPENSION OF ANY LOAD INDUCING SYSTEM GREATER THAN 0.5 PSF IS EXPLICITLY PROHIBITED UNLESS A CORRESPONDING REDUCTION IN CERTIFIED LIVE/SNOW LOADS CAN BE PERMITTED BY CODE.

DESIGN AND SPECIFICATION OF BASE STEEL TO CONCRETE SLAB ANCHORING IS NOT THE RESPONSIBILITY OF THE BUILDING MANUFACTURER. WEDGE ANCHORS SUPPLIED WITH THE BUILDING PACKAGE ARE SUITABLE FOR MOST SELF STORAGE APPLICATIONS HOWEVER, THE FINAL FOUNDATION DESIGN (DEPTH, STRENGTH, MIX, ETC.) WILL DETERMINE ACTUAL ANCHOR REQUIREMENTS.

BUILDING MANUFACTURER ASSUMES NO RESPONSIBILITY FOR CONCRETE SLAB FOUNDATION DESIGN, THICKNESS, MATERIALS, SITE SOIL CONDITIONS OR OTHER CONCRETE/MASONRY CONSTRUCTION.

ALL STRUCTURAL CONNECTIONS ARE TO BE MADE PER FASTENING DETAILS PRESENTED HEREIN. ALL STEEL FRAMING AND SHEETING MATERIALS MUST BE INSTALLED TO VERTICAL PLUMB AND HORIZONTALLY LEVEL.

THE BUILDING MANUFACTURER AND THE PROFESSIONAL ENGINEER SEALING THESE DRAWINGS ARE NOT THE PROFESSIONAL ENGINEER OF RECORD FOR THE ENTIRE PROJECT. THE PROFESSIONAL ENGINEER'S SEAL PERTAINS ONLY TO THE STRUCTURAL DESIGN OF THE METAL BUILDING SYSTEM. IT DOES NOT APPLY TO THE FOUNDATION SYSTEM, MASONRY DESIGN OR ANY OTHER ASPECT OF THE PROJECT UNLESS SPECIFICALLY STATED IN THESE DOCUMENTS.

JOBSITE / FIELD CONDITIONS NOTES:

BUILDING MANUFACTURER ASSUMES NO RESPONSIBILITY FOR ANY LOADS TO STRUCTURE NOT INDICATED AT THE TIME OF PURCHASE. ANY ALTERATIONS TO THE STRUCTURAL SYSTEM, REMOVAL OF ANY COMPONENT PARTS OR THE ADDITION OF OTHER CONSTRUCTION MATERIALS OR LOADS MUST BE DONE UNDER THE DIRECTION OF REGISTERED ARCHITECT, CIVIL OR STRUCTURAL ENGINEER.

ALL CONCRETE AND MASONRY CONSTRUCTION MUST BE FLAT, LEVEL AND SQUARE PER THE SLAB PLAN DIMENSIONS HEREIN.

ALL JOBSITE DIMENSIONS AND CONDITIONS SHALL BE FIELD VERIFIED BEFORE ERECTION OF BUILDING STRUCTURE.

ALL OMISSIONS, CONFLICTS AND DISCREPANCIES SHALL BE REPORTED TO THE BUILDING MANUFACTURER BEFORE PROCEEDING WITH PROJECT WORK.

ALL TEMPORARY SUPPORTS SUCH AS GUYS, BRACES, FALSEWORK, CRIBBING, WINDBRACES OR OTHER ELEMENTS REQUIRED FOR THE BUILDING ERECTION ARE TO BE DETERMINED BY AND SUPPLIED BY BUILDER/CONTRACTOR.

BUILDING MANUFACTURER HAS MADE A COMMITMENT TO MANUFACTURE QUALITY BUILDING COMPONENTS THAT CAN BE SAFELY ERECTED. JOB SITE SAFETY INSTRUCTION, SAFETY EQUIPMENT AND CONDITIONS ARE THE RESPONSIBILITY OF THE BUILDER/CONTRACTOR.

ALL COMPONENTS SHIPPED SHALL BE THOROUGHLY INSPECTED AND ACCOUNTED FOR AT THE TIME OF DELIVERY. ALL MATERIAL SHORTAGES OR DEFECTS MUST BE REPORTED WITHIN FIVE (5) WORKING DAYS OF MATERIAL DELIVERY TO THE BUILDING MANUFACTURER.

THE DIAPHRAGM SUPPORT OF THE INTERIOR PARTITION PANELS CONTRIBUTE TO THE STABILITY OF THE BUILDING BY TRANSFERRING LATERAL LOADS TO VERTICAL RESISTING MEMBERS. ANY MODIFICATION OR UNAUTHORIZED CUTTING OF INTERIOR PARTITION PANELS IS EXPRESSLY PROHIBITED BY THE BUILDING MANUFACTURER.

INSTALLATION NOTES:

FIELD CUTTING OF STRUCTURAL, SHEETING AND TRIMS FOR SPLICE AND FINAL FITTING OF COMPONENTS IS REQUIRED.

ALL ROOF PANEL LAPS SHALL BE SEALED WITH 3/8" (MINIMUM) WIDTH MASTIC TAPE AS PROVIDED FOR PROJEC6T. ALL SHEET PROFILE FOAM CLOSURES AT EAVE, WALL AND RIDGE CONDITIONS AS PROVIDED FOR PROJEC6T MUST BE INSTALLED AS SHOWN HEREIN.

WALL PANELS AND WALL TRIMS, AT INTERIOR AND EXTERIOR, ARE TO BE SET WITH 1/4" CLEARANCE ABOVE CONCRETE SURFACES AND AT ANY LOCATIONS WHICH MAY BE SUBJEC6TED TO CONTACT WITH STANDING WATER.

LAP ALL FLASHINGS 2" MINIMUM AND SEAL AS REQUIRED FOR WATER TIGHTNESS

ALLOW 1/4" TOLERANCE AT EACH END FOR PURLINS, HEADERS AND GIRTS.

DRAWING INDEX

1	LEAD SHEET, GENERAL NOTES, SCHEDULES, KEY PLAN
2	SLAB PLAN, ELEVATIONS
3	INTERIOR ELEVATIONS
4	FLOOR PLAN, FRAMING PLAN
5	PARTITION PLAN, ROOF PLAN
6	DETAILS
7	DETAILS
8	DETAILS
9	DETAILS
10	DETAILS

PRINTS ISSUED FOR	BY	DATE
CONSTRUCTION	KF	10/12/23

CONFIDENTIAL AND PROPRIETARY INFORMATION

THESE DRAWINGS ARE THE SOLE AND EXCLUSIVE PROPERTY OF THE BUILDING MANUFACTURER, SENSITIVE, PRIVILEGED, AND CONFIDENTIAL INFORMATION CONTAINED IN THESE DRAWINGS MAY ONLY BE USED FOR ITS BENEFIT. THE DISCLOSURE OF THESE DRAWINGS TO UNAUTHORIZED PERSONS IS STRICTLY PROHIBITED. THESE DRAWINGS MAY NOT BE USED TO CONSTRUCT LIKE PROJECTS WITHOUT WRITTEN PERMISSION FROM THE BUILDING MANUFACTURER. THIS DOCUMENT AND ALL COPIES MUST BE RETURNED UPON DEMAND.

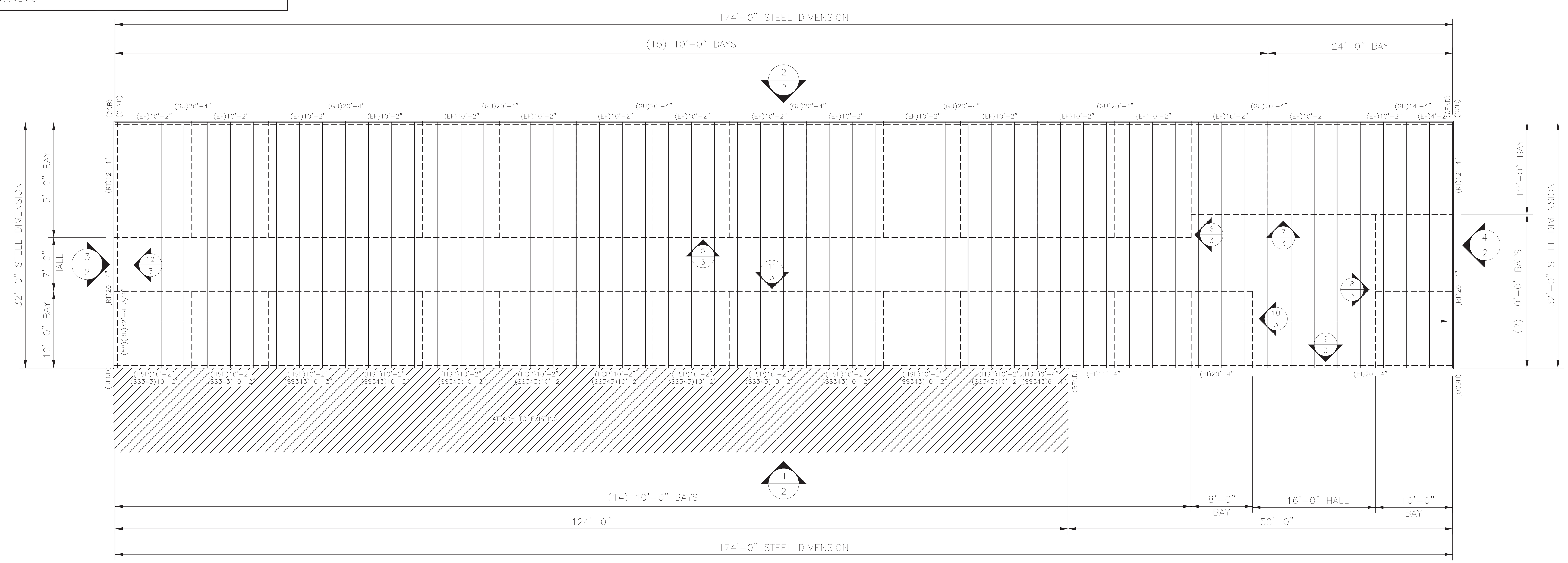

KEY PLAN

s c a l e – 1/8" = 1'-0"

RICHARD K. JOYCE REGISTERED ENGINEER AGRICULTURE COMMERCE No. 108262 STATE OF TENNESSEE OCT 25 2023

CLOSURE NOTE:
(58) INSIDE CLOSURES INCLUDED FOR LOW EAVE. INSTALL BTR TAPE ON TOP AND BOTTOM OF INSIDE CLOSURE (SEE DETAILS AND INSTALLATION GUIDE)
(97) INSIDE CLOSURES INCLUDED FOR BASE OF EXTERIOR WALL PANELS.
(22) OUTSIDE CLOSURES INCLUDED FOR RAKE.
(75) OUTSIDE CLOSURES INCLUDED FOR ROOF AND WALL OF HIGH EAVE.

ERECTOR NOTE:–
A DETAILED INSTALLATION GUIDE IS AVAILABLE AND SHOULD BE CONSULTED DURING THE EREC6TION OF THIS BUILDING PACKAGE. PLEASE CONTACT US IF YOU HAVE NOT REC6EIVED A COPY OF THE INSTALLATION GUIDE AND ONE WILL BE PROVIDED TO YOU.

STANDARD ABBREVIATIONS

AFF	ABOVE FINISHED FLOOR	FT	FOOT OR FEET	REQD	REQUIRED
APPROX	APPROXIMATE	FTG	FOOTING	REINF	REINFORCED
BLDG	BUILDING	GA	GAUGE	RO	ROUGH OPENING
BLK	BLOCK	GALV	GALVANIZED	SECT	SECTION
BOT	BOTTOM	GC	GENERAL CONTRACTOR	SF	SQUARE FOOTAGE
C/L	CENTERLINE	GRND	GROUND	SIM	SIMILAR
CLG	CEILING	GR	GRADE	SQ	SQUARE
COL	COLUMN	GWB	GYPSUM WALL BOARD	STD	STANDARD
CONC	CONCRETE	HORIZ	HORIZONTAL	STL	STEEL
CTR	CENTER	HT	HEIGHT	TOB	TOP OF BEAM
DBL	DOUBLE	INSUL	INSULATION	TOC	TOP OF CONCRETE
DET	DETAIL	INT	INTERIOR	TOS	TOP OF STEEL
DIA	DIAMETER	INFO	INFORMATION	TOW	TOP OF WALL
DWG	DRAWING	JT	JOINT	TS	TUBE STEEL
DIM	DIMENSION	MAX	MAXIMUM	TYP	TYPICAL
DR	DOOR	MIN	MINIMUM	UNO	UNLESS NOTED OTHERWISE
EA	EACH	MISC	MISCELLANEOUS	VAR	VARIES
EL	ELEVATION	MTL	METAL	VERT	VERTICAL
EXIST	EXISTING	NIC	NOT IN CONTRACT	VIF	VERIFY IN FIELD
EXP	EXPANSION	NTS	NOT TO SCALE	WO	WITHOUT
EXT	EXTERIOR	NA	NOT APPLICABLE	WT	WEIGHT
EIFS	EXTERIOR INSULATION AND FINISH SYSTEM	NO	NUMBER		
EOS	EDGE OF SLAB	OA	OVERALL		
FBO	FURNISHED BY OTHERS	OC	ON CENTER		
FDN	FOUNDATION	OH	OPPOSITE HAND		
FF	FINISHED FLOOR	OPP	OPPOSITE		
FOB	FACE OF BLOCK OR BRICK	PTN	PARTITION		
FOS	FACE OF STEEL	RAD	RADIUS		
		REF	REFERENCE		

FASTENER ABBREVIATIONS

(F1)	– 3/8" X 3" CONC. SCREW ANCHOR	– BASE TO SLAB CONNECTIONS
(F2)	– 12 X 1 SELF-DRILLING TEK (PLTD)	– STRUCTURAL STEEL CONNECTIONS
(F2)	– 12 X 1 SELF-DRILLING TEK (PLTD)	– PARTITION SHEETING
(F4)	– 12 X 2 SELF-DRILLING TEK (PLTD)	– PARTITION ANGLE CONNECTIONS
(F5)	– 12 X 1 1/4 WASHER TEK (PTD)	– EXTERIOR WALL SHEETING
(F6)	– 12 X 1 1/4 WASHER ZAC (PTD)(PLTD)	– ROOF SHEETING
(F7)	– 12 X 1 1/4 WASHER TEK (PTD)	– EXTERIOR TRIM DRILLER
(F8)	– 12 X 7/8 WASHER TEK (PTD)	– EXTERIOR WALL PANEL LAP
(F9)	– 12 X 7/8 WASHER ZAC (PTD)(PLTD)	– ROOF PANEL LAP
(F10)	– 12 X 7/8 WASHER TEK (PTD)	– EXTERIOR TRIM LAP
(F11)	– 1/8 POP RIVET	– EXTERIOR TRIM
(F13)	– 12 X 1 1/4 WASHER TEK (PTD)	– INTERIOR WALL SHEETING
(F13)	– 12 X 1 1/4 WASHER TEK (PTD)	– INTERIOR TRIM DRILLER
(F14)	– 12 X 7/8 WASHER TEK (PTD)	– INTERIOR WALL PANEL LAP
(F14)	– 12 X 7/8 WASHER TEK (PTD)(PLTD)	– INTERIOR TRIM LAP
(F17)	– 1/4"-14 X 1" SDS W/ WASHER #1(PLTD)	– "CL" CLIP/STRUCTURE CONNECTIONS
(F18)	– 1/4"-14 X 1 1/4" SDS ZAC W/WASHER #1E(PTD)(PLTD)	– "CL" ROOF DRILLER
(F19)	– 14 X 7/8" SDS ZAC W/ WASHER #4(PTD)(PLTD)	– "CL" ROOF LAP
(F20)	– 1/4"-14 X 1 1/4" SDS ZAC W/WASHER #1E(PTD)(PLTD)	– "CL" TRIM DRILLER
(F21)	– 14 X 7/8" SDS ZAC W/WASHER #4(PTD)(PLTD)	– "CL" TRIM LAP

STRUCTURE ABBREVIATIONS

(BA)	– B4216R 4 X 2 X 16GA. ANGLE (5.9)	– FLOOR BASE ANGLE
(BC)	– U42516Z 4 1/8 X 2 7/8 X 16GA. CHANNEL (9.9)	– FLOOR BASE CHANNEL
(C4)	– C4216R 4 X 2 X 16GA. CEE (8.9)	– 4" COLUMN
(C435)	– C43512R 4 X 3 1/2 X 12GA. CEE (11.9)	– 4" COLUMN
(DH)	– C4216R 4 X 2 X 16GA. CEE (8.9)	– DOOR HEAD
(DJ)	– C43512R 4 X 3 1/2 X 12GA. CEE (11.9)	– DOOR JAMB
(EC)	– U4216R 4 1/8 X 2 3/8 X 16GA. CHANNEL (8.9)	– EAVE CHANNEL
(ES)	– E64316LR 4 X 6 X 3 X 16GA. EAVE STRUT (13.9)	– EAVE STRUT
(FC)	– AS MANUFACTURED	– FLOOR CLIP
(G)	– C4216R 4 X 2 X 16GA. CEE (8.9)	– GIRT
(HA)	– B4216R 4 X 2 X 16GA. ANGLE (5.9)	– HALL TOP ANGLE
(HR)	– C4216R 4 X 2 X 16GA. CEE (8.9)	– DOOR HEAD REINFORCEMENT
(JR)	– C62516R 6 X 2 1/2 X 16GA. CEE (11.9)	– JACK RAFTER
(M)	– C12416R 12 X 4 X 16GA. CEE (20.9)	– MULLION
(MC)	– B4216R 4 X 2 X 2" LONG 16GA. ANGLE (5.9)	– MINI CLIP
(P4)	– Z42516R 2 1/2 X 4 X 2 1/2 X 16GA. ZEE (9.9)	– ROOF PURLIN
(P6)	– Z62516R 2 1/2 X 6 X 2 1/2 X 16GA. ZEE (11.9)	– ROOF PURLIN
(P8)	– Z82512R 2 1/2 X 8 X 2 1/2 X 12GA. ZEE (13.9)	– ROOF PURLIN
(PA)	– B4216R 4 X 2 X 16GA. ANGLE (5.9)	– PARTITION ANGLE
(RA)	– B4216R 4 X 2 X 16GA. ANGLE (5.9)	– RAKE ANGLE
(RS)	– E64316LR 4 X 6 X 3 X 16GA. STRUT (13.9)	– RIDGE STRUT

SHEETING ABBREVIATIONS

(ML)	– 29GA. M-LOC WALL PANEL
(RL)	– 29GA. R-LOC WALL PANEL
(PL)	– 29GA. PANEL-LOC WALL PANEL
(RR)	– 26GA. PBR ROOF PANEL
(RW)	– 26GA. PBR WALL PANEL
(CL18)	– 24GA. CENTRAL-LOC SSR 18" ROOF PANEL
(CL24)	– 24GA. CENTRAL-LOC SSR 24" ROOF PANEL

TRIM ABBREVIATIONS

(BTR)	– 7/8" ROLL MASTIC	(IN)	– R PANEL INSIDE CORNER TRIM
(BT)	– BASE TRIM	(JA)	– DOOR JAMB TRIM
(CLIN)	– R PANEL INSIDE FOAM CLOSURE	(JC)	– DOOR JAMB COVER TRIM
(CLOUT)	– R PANEL OUTSIDE FOAM CLOSURE	(MC)	– DOOR MULLION COVER TRIM
(CM)	– DOOR CORNER MULLION TRIM	(OCB)	– OUTSIDE CORNER BOX
(DK)	– DOWNSPOUT WITH KICK OUT	(OU)	– R PANEL OUTSIDE CORNER TRIM
(DSS)	– DOWNSPOUT STRAP	(PB)	– PEAK BOX
(EF)	– EAVE FLASHING	(REND)	– RAKE TRIM END CAP
(FRC)	– FORMED RIDGE CAP	(RT)	– RAKE TRIM
(GE)	– GUTTER END CAP	(TI)	– ROOF TIE IN TRIM
(GEOCEL)	– SEALANT	(TR)	– ROOF STEP TRANSITION FLASHING
(GS)	– GUTTER HANGER STRAP	(UN)	– FLAT RIDGE CAP
(GU)	– GUTTER	(4SP)	– 4OZ. TOUCH UP SPRAY PAINT
(HC)	– DOOR HEAD COVER TRIM		
(HE)	– DOOR HEAD TRIM		
(HI)	– HIGH EAVE TRIM		

PROJECT:
32 x 174 x 10-4 LS

LOCATION:
Benton, TN 37307

Sunward Corporation
6800 E. Hampden Ave.
Denver, CO 80224
Phone: 303-758-4141
Fax: 303-758-2735

DWG #23-0184-CL6

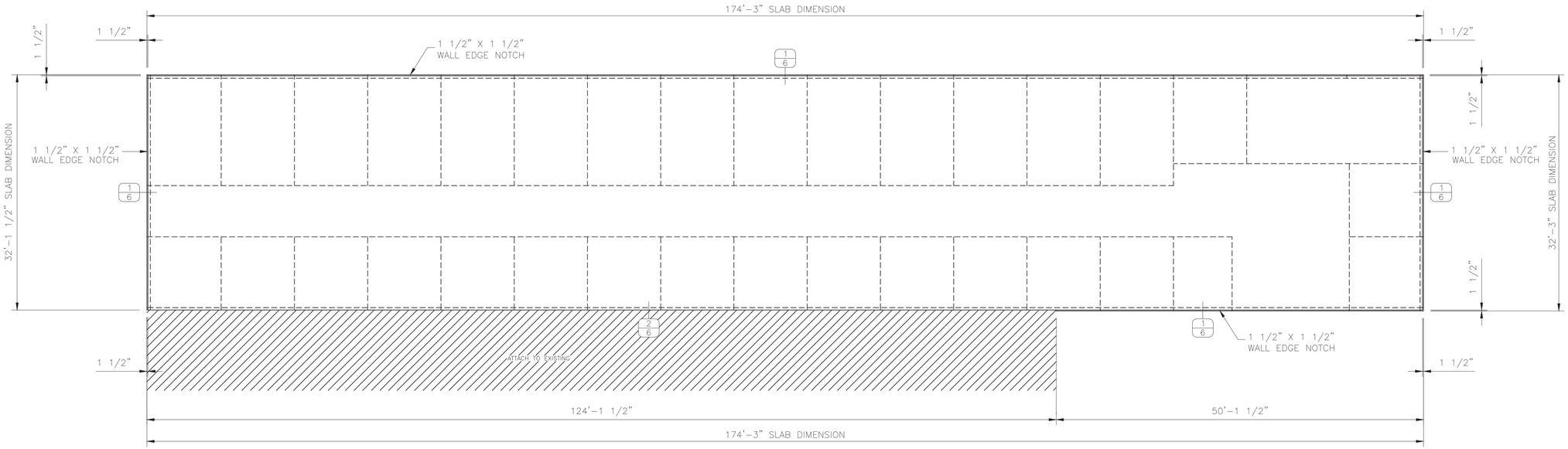

SLAB PLAN

scale - 1/8" = 1'-0"

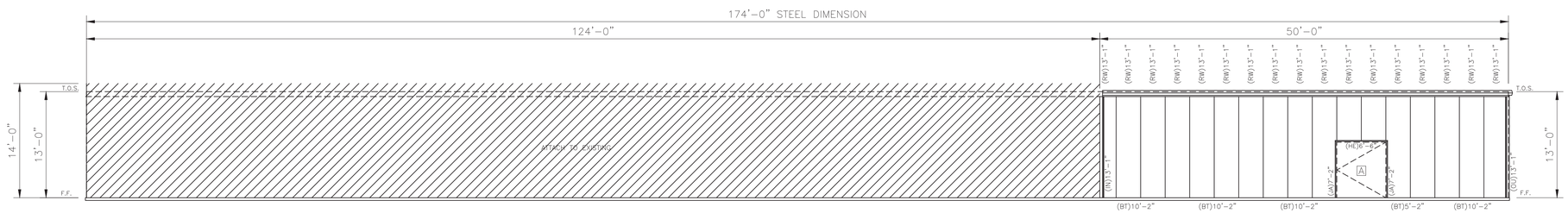

1 FRONT ELEVATION

scale - 1/8" = 1'-0"

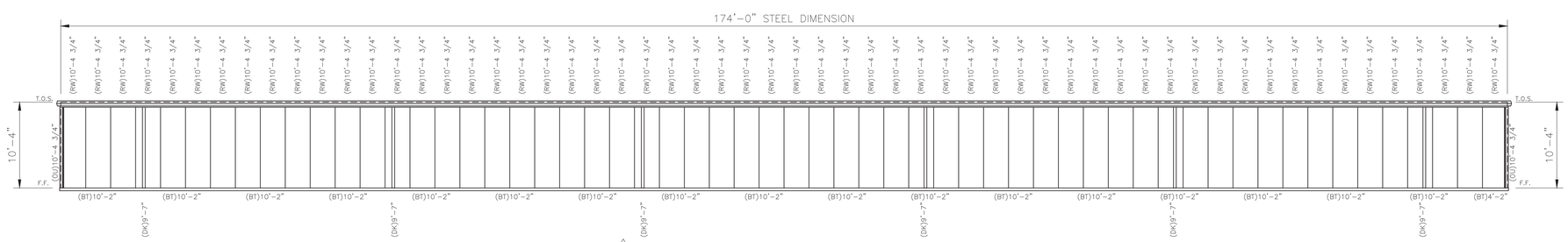

2 REAR ELEVATION

scale - 1/8" = 1'-0"

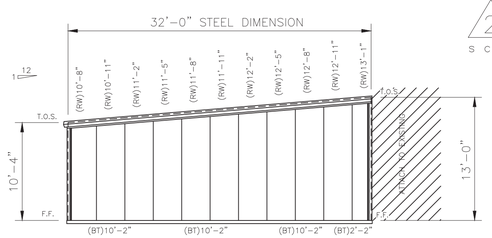

3 LEFT ELEVATION

scale - 1/8" = 1'-0"

EXTERIOR DOOR SCHEDULE
A (1) EACH 6'-0" X 6'-9 11/16" F.O. ONLY
INTERIOR DOOR SCHEDULE
B (29) EACH 9'-0" X 7'-0" ROLLUP DOOR
C (3) EACH 8'-6" X 7'-0" ROLLUP DOOR
D (1) EACH 7'-0" X 7'-0" ROLLUP DOOR

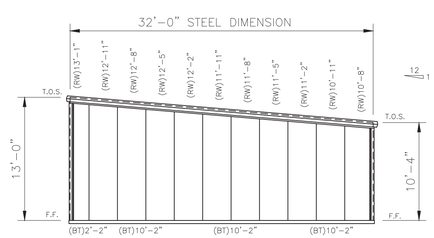

4 RIGHT ELEVATION

scale - 1/8" = 1'-0"

CONSTRUCTION	KF	10/12/23
PRINTS ISSUED FOR	BY	DATE

CONFIDENTIAL AND PROPRIETARY INFORMATION

THESE DRAWINGS ARE THE SOLE AND EXCLUSIVE PROPERTY OF THE BUILDING MANUFACTURER, SENSITIVE, PRIVILEGED, AND CONFIDENTIAL INFORMATION CONTAINED HEREIN, AND ARE ISSUED TO YOU FOR YOUR USE AND BENEFIT. THE DISCLOSURE OF THESE DRAWINGS TO UNAUTHORIZED PERSONS IS STRICTLY PROHIBITED. THESE DRAWINGS MAY NOT BE USED TO CONSTRUCT, USE, REPRODUCE OR REPRODUCE PRODUCTS WITHOUT WRITTEN PERMISSION FROM THE BUILDING MANUFACTURER. THIS DOCUMENT AND ALL COPIES MUST BE RETURNED UPON DEMAND.

PROJECT:
32 x 174 x 10-4 LS

LOCATION:
Benton, TN 37307

Sunward Corporation
6800 E. Hampden Ave.
Denver, CO 80224
Phone: 303-758-4141
Fax: 303-758-2735

RICHARD K. JOYCE
REGISTERED ENGINEER
OCT 2 5, 2023
No. 108252
STATE OF TENNESSEE

DWG #23-0184-CL6

Sheet

2 OF 11

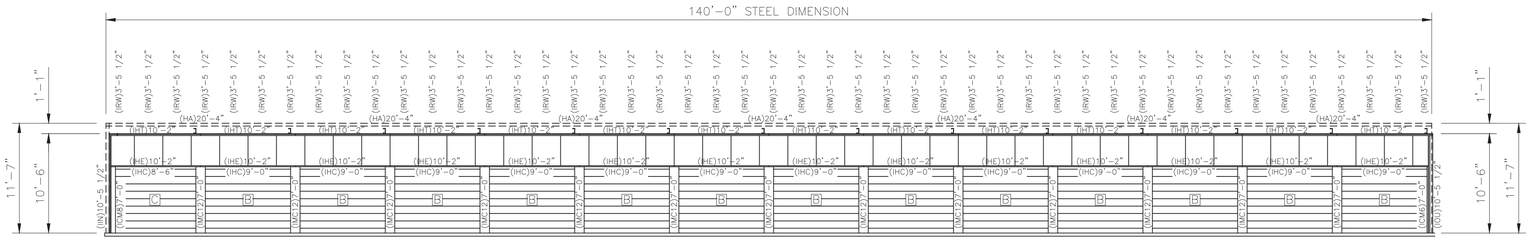

5 INTERIOR ELEVATION
scale - 1/8" = 1'-0"

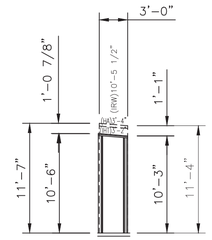

6 INT ELEV
scale - 1/8" = 1'-0"

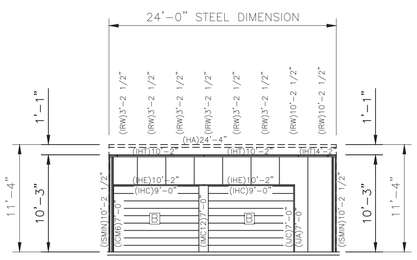

7 INT ELEVATION
scale - 1/8" = 1'-0"

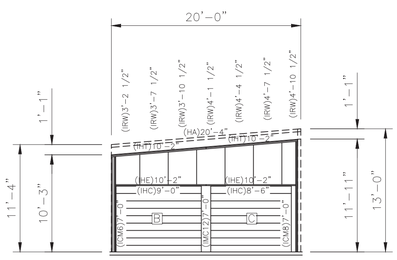

8 INT ELEVATION
scale - 1/8" = 1'-0"

EXTERIOR DOOR SCHEDULE
A (1) EACH 6'-0" X 6'-9 11/16" F.O. ONLY
INTERIOR DOOR SCHEDULE
B (29) EACH 9'-0" X 7'-0" ROLLUP DOOR
C (3) EACH 8'-6" X 7'-0" ROLLUP DOOR
D (1) EACH 7'-0" X 7'-0" ROLLUP DOOR

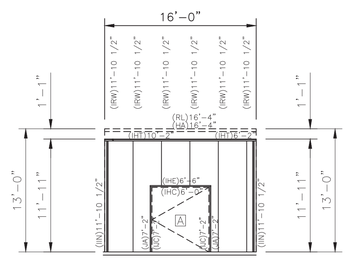

9 INT ELEVATION
scale - 1/8" = 1'-0"

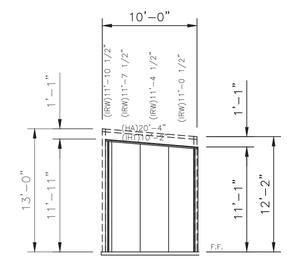

10 INT ELEVATION
scale - 1/8" = 1'-0"

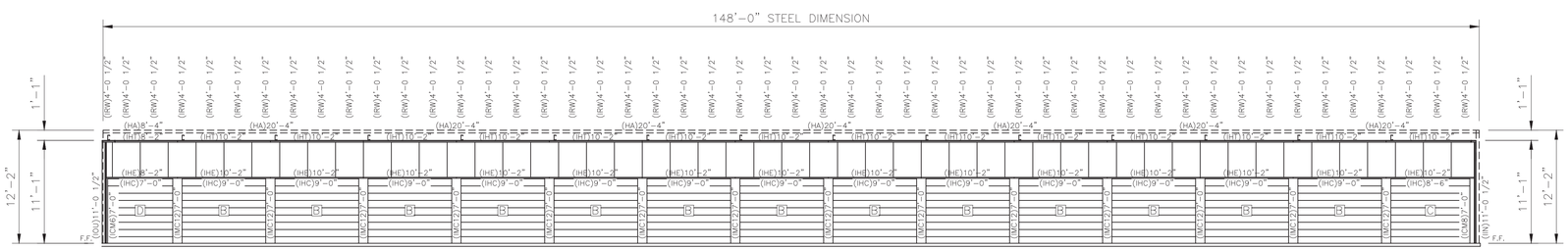

11 INTERIOR ELEVATION
scale - 1/8" = 1'-0"

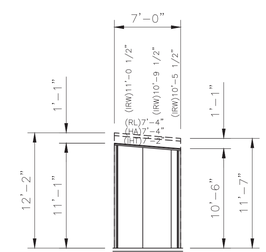

12 INT ELEV
scale - 1/8" = 1'-0"

RICHARD K. JOYCE
REGISTERED ENGINEER
No. 108262
STATE OF TENNESSEE
OCT 25 2023

CONSTRUCTION	KF	10/12/23
PRINTS ISSUED FOR	BY	DATE

CONFIDENTIAL AND PROPRIETARY INFORMATION

THESE DRAWINGS ARE THE SOLE AND EXCLUSIVE PROPERTY OF THE BUILDING MANUFACTURER, SENSITIVE, PRIVILEGED, AND CONFIDENTIAL INFORMATION CONTAINED HEREIN. THESE DRAWINGS MAY ONLY BE USED FOR THE BENEFIT, THE DISCLOSURE OF THESE DRAWINGS TO UNAUTHORIZED PERSONS IS STRICTLY PROHIBITED. THESE DRAWINGS MAY NOT BE USED TO CONSTRUCT, UPE PRODUCTS WITHOUT WRITTEN PERMISSION FROM THE BUILDING MANUFACTURER. THIS DOCUMENT AND ALL COPIES MUST BE RETURNED UPON DEMAND.

PROJECT:
32 x 174 x 10-4 LS

LOCATION:
Benton, TN 37307

Sunward Corporation
6800 E. Hampden Ave.
Denver, CO 80224
Phone: 303-758-4141
Fax: 303-758-2735

DWG #23-0184-CL6

Sheet
3 OF 11

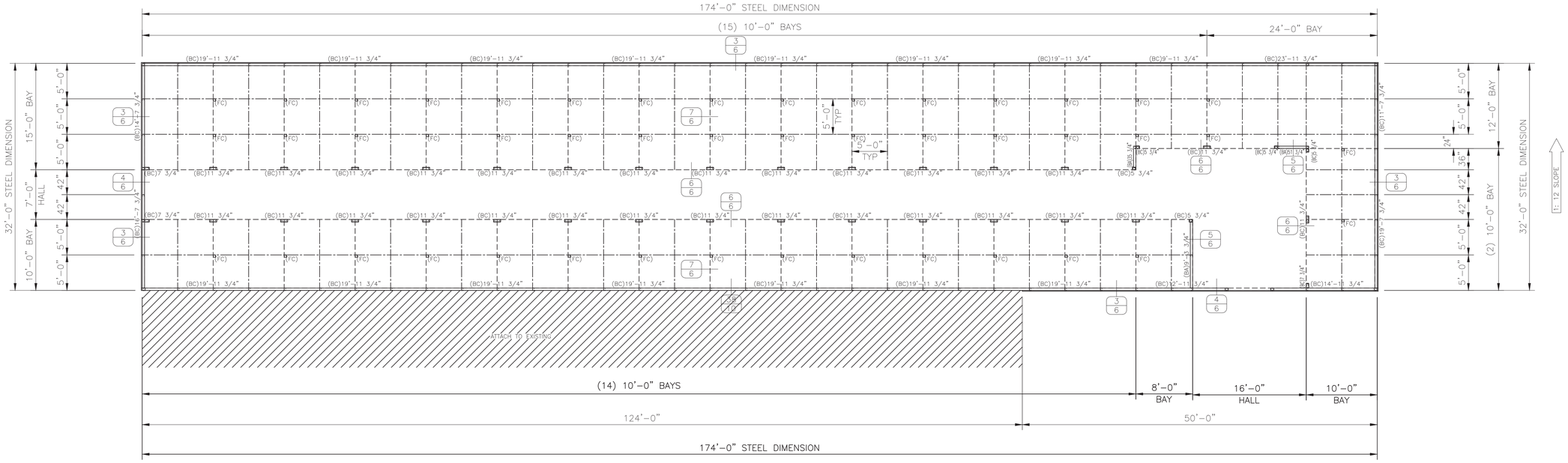

FLOOR PLAN

scale - 1/8" = 1'-0"

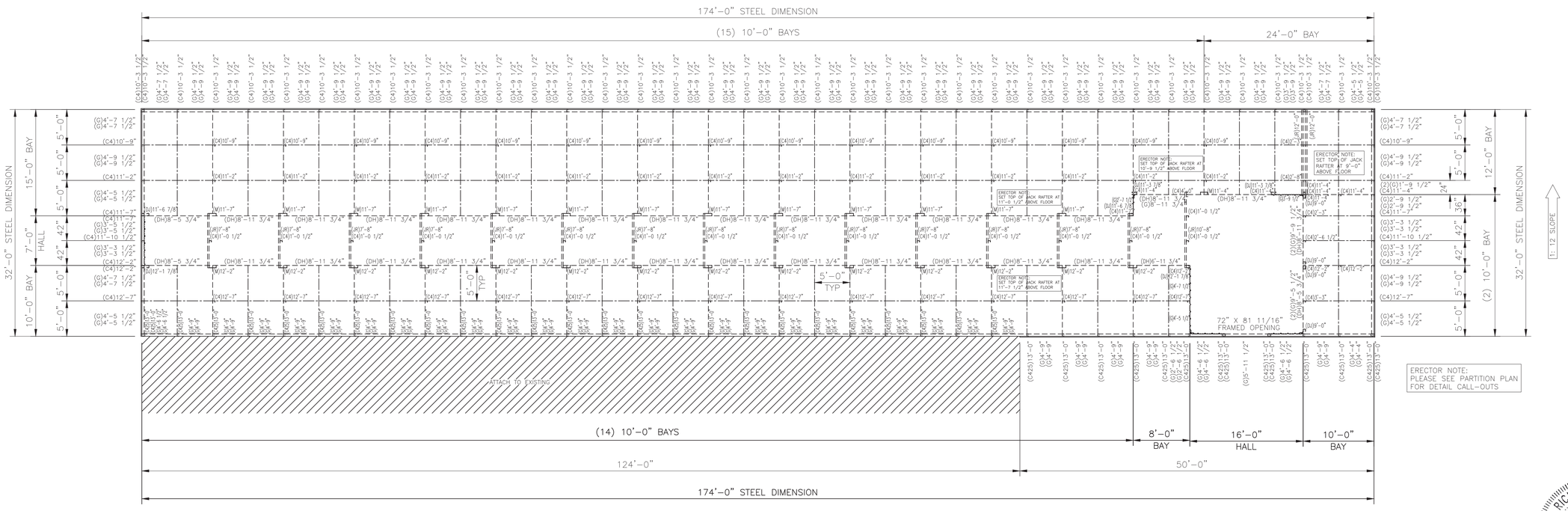

ERECTOR NOTE:
PLEASE SEE PARTITION PLAN FOR DETAIL CALL-OUTS

FRAMING PLAN

scale - 1/8" = 1'-0"

RICHARD K. JOYCE
REGISTERED ENGINEER
No. 108267
OCT 25 2023
STATE OF TENNESSEE

DATE	BY	
10/12/23	KF	CONSTRUCTION PRINTS ISSUED FOR

CONFIDENTIAL AND PROPRIETARY INFORMATION

THESE DRAWINGS ARE THE SOLE AND EXCLUSIVE PROPERTY OF THE BUILDING MANUFACTURER, SENSITIVE, PRIVILEGED, AND CONFIDENTIAL INFORMATION CONTAINED HEREIN MUST BE HELD IN STRICT CONFIDENCE FOR THE BENEFIT. THE DISCLOSURE OF THESE DRAWINGS TO UNAUTHORIZED PERSONS IS STRICTLY PROHIBITED. THESE DRAWINGS MAY NOT BE USED TO CONSTRUCT LIKE PRODUCTS WITHOUT WRITTEN PERMISSION FROM THE BUILDING MANUFACTURER. THIS DOCUMENT AND ALL COPIES MUST BE RETURNED UPON DEMAND.

PROJECT:
32 x 174 x 10-4 LS

LOCATION:
Benton, TN 37307

Sunward Corporation
6800 E. Hampden Ave.
Denver, CO 80224
Phone: 303-758-4141
Fax: 303-758-2735

DWG #23-0184-CL6

Sheet

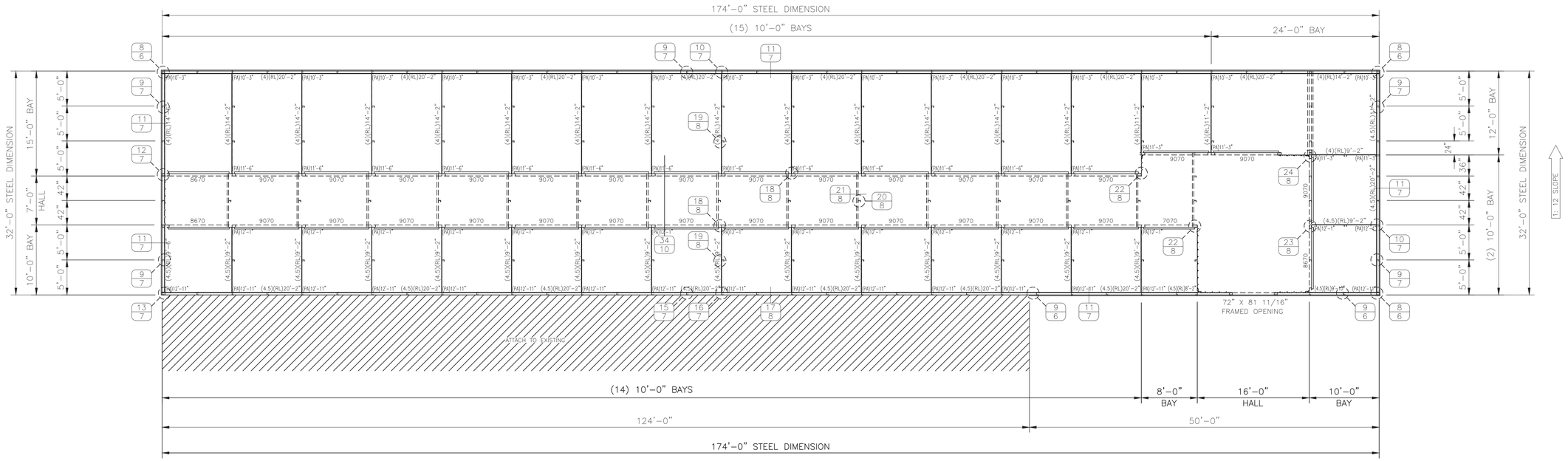

PARTITION PLAN

scale - 1/8" = 1'-0"

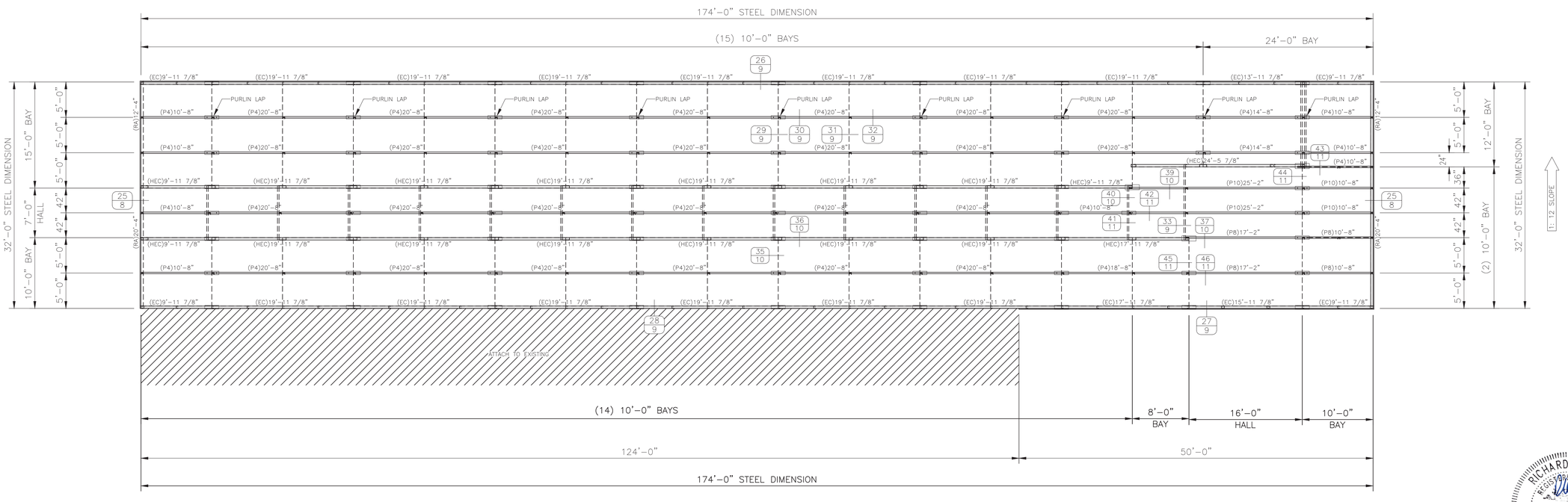

ROOF PLAN

scale - 1/8" = 1'-0"

CONSTRUCTION	KF	10/12/23
PRINTS ISSUED FOR	BY	DATE

CONFIDENTIAL AND PROPRIETARY INFORMATION

THESE DRAWINGS ARE THE SOLE AND EXCLUSIVE PROPERTY OF THE BUILDING MANUFACTURER, SENSITIVE, PRIVILEGED, AND CONFIDENTIAL INFORMATION CONTAINED HEREIN MUST NOT BE DISCLOSED TO ANY PERSON OR PUBLIC BENEFIT. THE DISCLOSURE OF THESE DRAWINGS TO UNAUTHORIZED PERSONS IS STRICTLY PROHIBITED. THESE DRAWINGS MAY NOT BE USED TO CONSTRUCT LIKE PRODUCTS WITHOUT WRITTEN PERMISSION FROM THE BUILDING MANUFACTURER. THIS DOCUMENT AND ALL COPIES MUST BE RETURNED UPON DEMAND.

PROJECT:
32 x 174 x 10-4 LS

LOCATION:
Benton, TN 37307

Sunward Corporation
6800 E. Hampden Ave.
Denver, CO 80224
Phone: 303-758-4141
Fax: 303-758-2735

DWG #23-0184-CL6

Sheet

5 OF 11

RICHARD K. JOYCE
REGISTERED ENGINEER
OCT 25 2023
TENNESSEE
No. 108262
STATE OF TENNESSEE

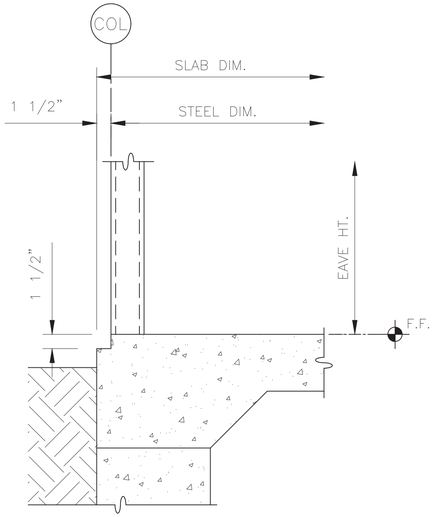

1 WALL EDGE SLAB NOTCH
1 1/2" X 1 1/2" NOTCH

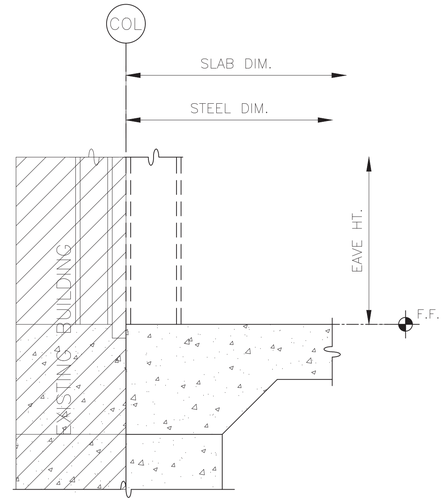

2 SLAB EDGE AT EXISTIING
NO NOTCH

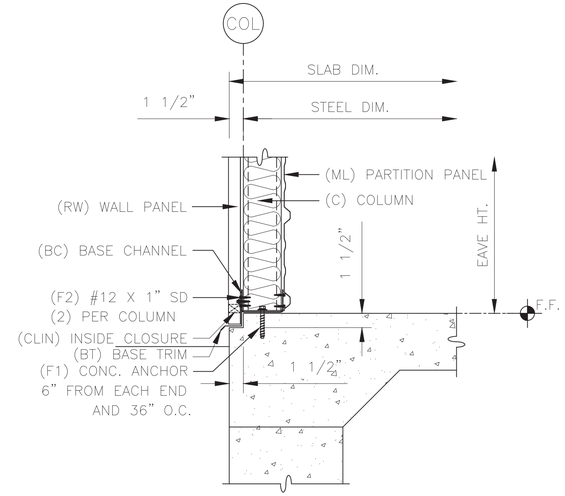

3 WALL EDGE BASE CHANNEL

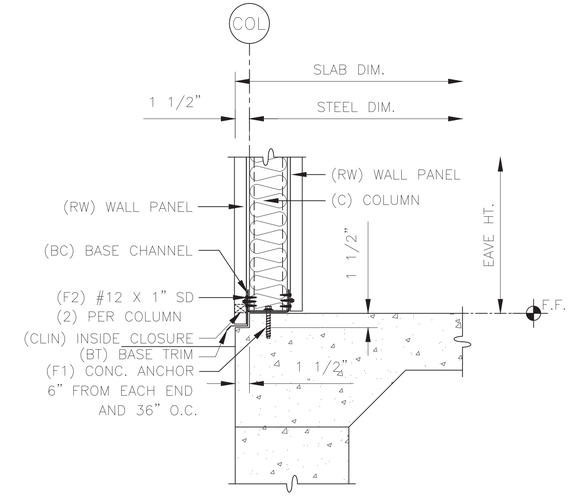

4 WALL EDGE BASE CHANNEL

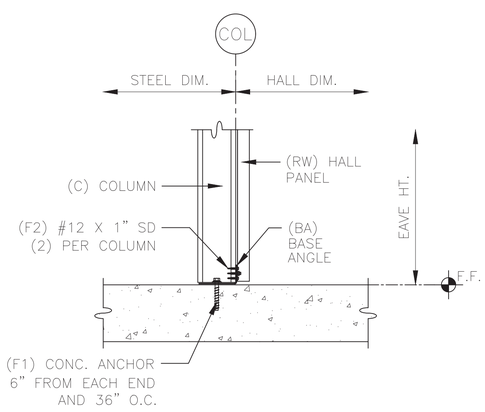

5 BASE ANGLE

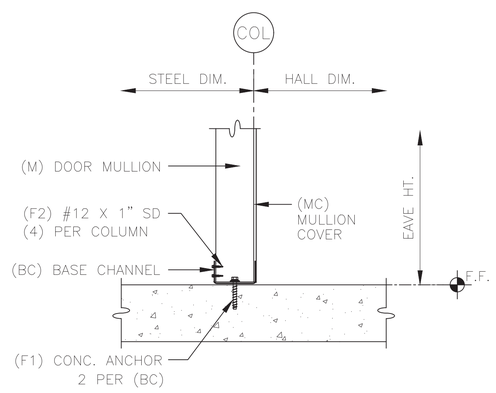

6 COLUMN FLOOR BASE CHANNEL
AT HALLWAY

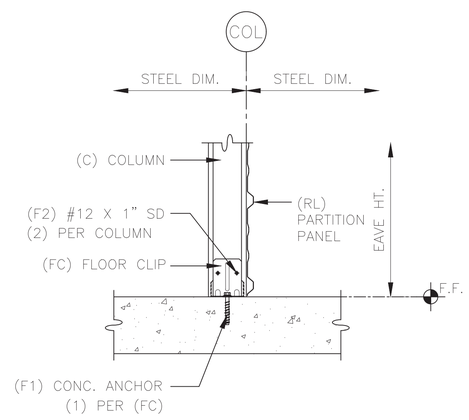

7 COLUMN FLOOR BASE CLIP

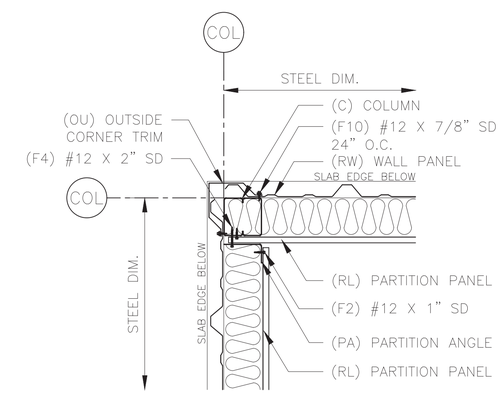

8 OUTSIDE CORNER
AT CLIMATE CONTROL WALLS

RICHARD K. JOYCE
REGISTERED ENGINEER
OCT 2 5 2023
RICHARD K. JOYCE
NO. 108262
STATE OF TENNESSEE

CONSTRUCTION PRINTS ISSUED FOR	KF	10/12/23
	BY	DATE

CONFIDENTIAL AND PROPRIETARY INFORMATION

THESE DRAWINGS ARE THE SOLE AND EXCLUSIVE PROPERTY OF THE BUILDING MANUFACTURER, SENSITIVE, PRIVILEGED, AND CONFIDENTIAL INFORMATION CONTAINED IN THESE DRAWINGS MAY NOT BE USED FOR THE BENEFIT, THE DISCLOSURE OF THESE DRAWINGS TO UNAUTHORIZED PERSONS IS STRICTLY PROHIBITED. THESE DRAWINGS MAY NOT BE USED TO CONSTRUCT LIKE PRODUCTS WITHOUT WRITTEN PERMISSION FROM THE BUILDING MANUFACTURER. THIS DOCUMENT AND ALL COPIES MUST BE RETURNED UPON DEMAND.

PROJECT:
32 x 174 x 10-4 LS

LOCATION:
Benton, TN 37307

Sunward Corporation
6800 E. Hampden Ave.
Denver, CO 80224
Phone: 303-758-4141
Fax: 303-758-2735

DWG #23-1084-CL6

Sheet
6 of 11

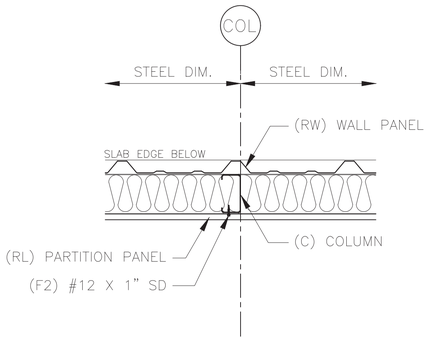

9 CLIMATE CONTROL WALL

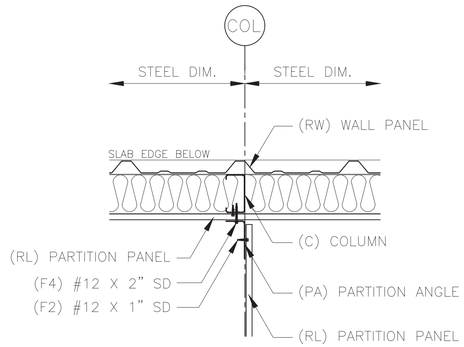

10 CLIMATE CONTROL WALL WITH PARTITION

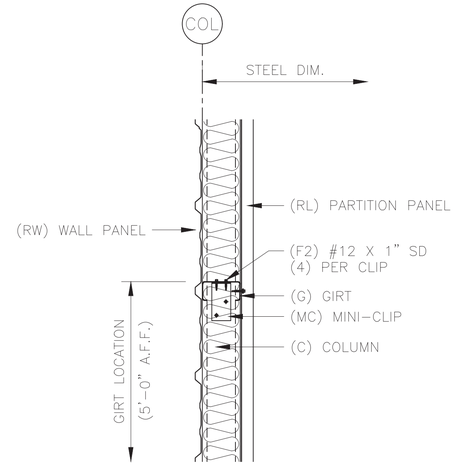

11 TYPICAL GIRT AT CLIMATE CONTROL WALL

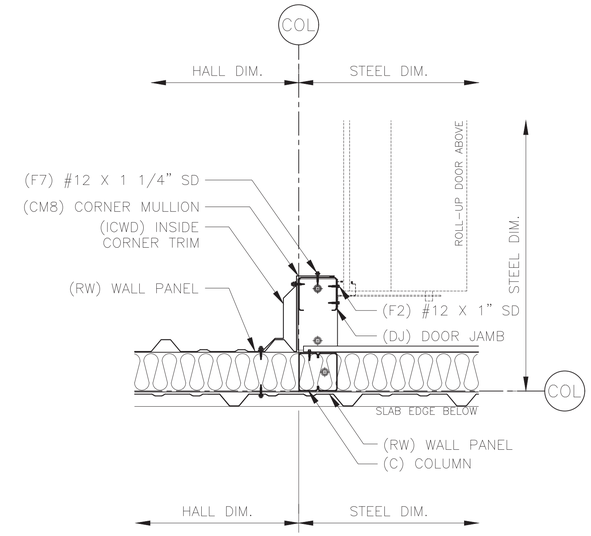

12 JAMB AT WALK DOOR AT CLIMATE CONTROL WALL

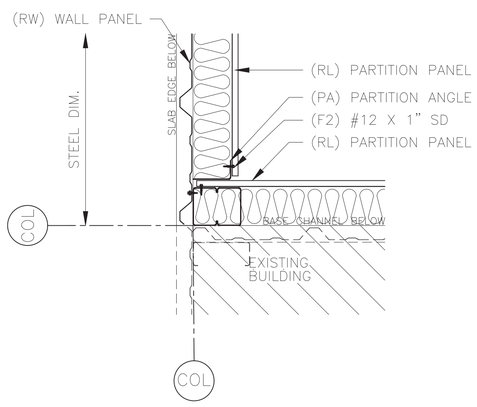

13 CLIMATE CONTROL WALLS AT EXISTING BLDG.

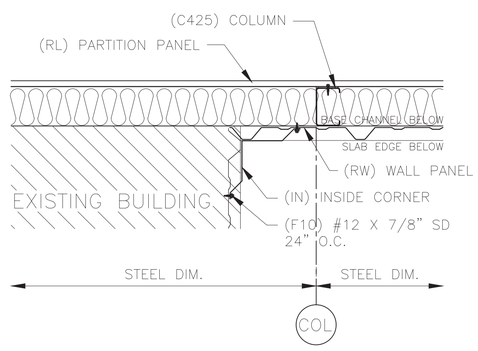

14 WALL AT EXISTING

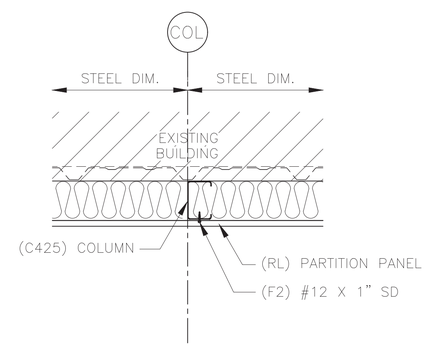

15 CLIMATE CONTROL WALL AT EXISTING BLDG.

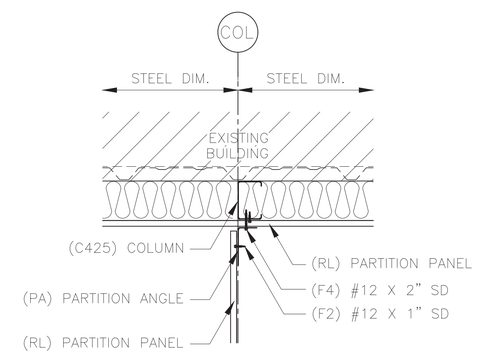

16 CLIMATE CONTROL WALL WITH PARTITION

RICHARD K. JOYCE
REGISTERED ENGINEER
No. 108262
OCT. 25, 2023
STATE OF TENNESSEE

CONSTRUCTION PRINTS ISSUED FOR	KF	10/12/23
	BY	DATE

CONFIDENTIAL AND PROPRIETARY INFORMATION

THESE DRAWINGS ARE THE SOLE AND EXCLUSIVE PROPERTY OF THE BUILDING MANUFACTURER, SENSITIVE, PRIVILEGED, AND CONFIDENTIAL INFORMATION CONTAINED IN THESE DRAWINGS WAS PROVIDED BY THE BUILDING MANUFACTURER FOR THE SOLE BENEFIT. THE DISCLOSURE OF THESE DRAWINGS TO UNAUTHORIZED PERSONS IS STRICTLY PROHIBITED. THESE DRAWINGS MAY NOT BE USED TO CONSTRUCT LIKE PRODUCTS WITHOUT WRITTEN PERMISSION FROM THE BUILDING MANUFACTURER. THIS DOCUMENT AND ALL COPIES MUST BE RETURNED UPON DEMAND.

PROJECT:
32 x 174 x 10-4 LS

LOCATION:
Benton, TN 37307

Sunward Corporation
6800 E. Hampden Ave.
Denver, CO 80224
Phone: 303-758-4141
Fax: 303-758-2735

DWG #23-1084-CL6

Sheet

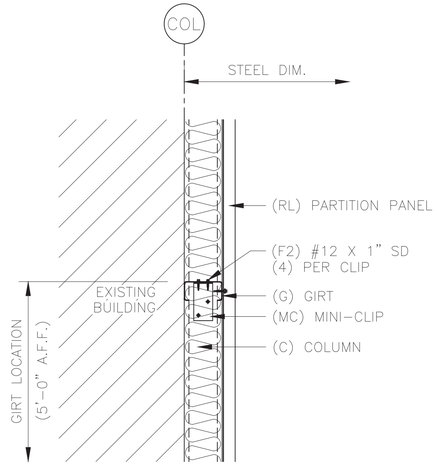

17 TYPICAL GIRT AT CLIMATE CONTROL WALL

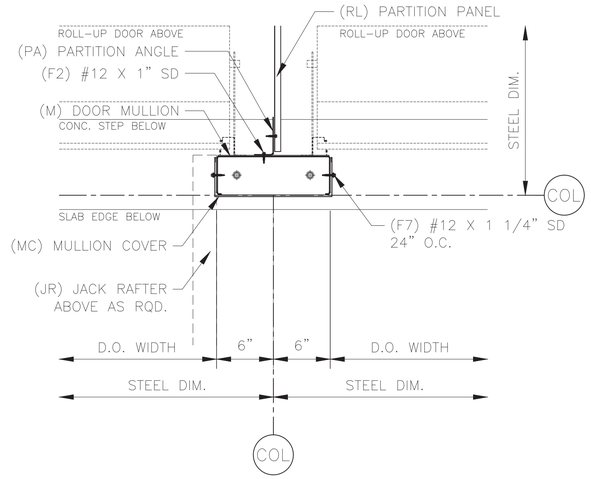

ERECTOR NOTE:
BASE CHANNEL IS 1/4" SHORTER THAN MULLION.
CENTER BASE CHANNEL ON CENTERLINE OF BAY.

18 DOOR MULLION AT JACK RAFTER

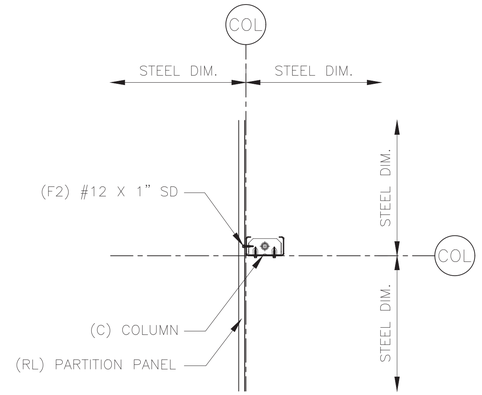

19 COLUMN CLIP

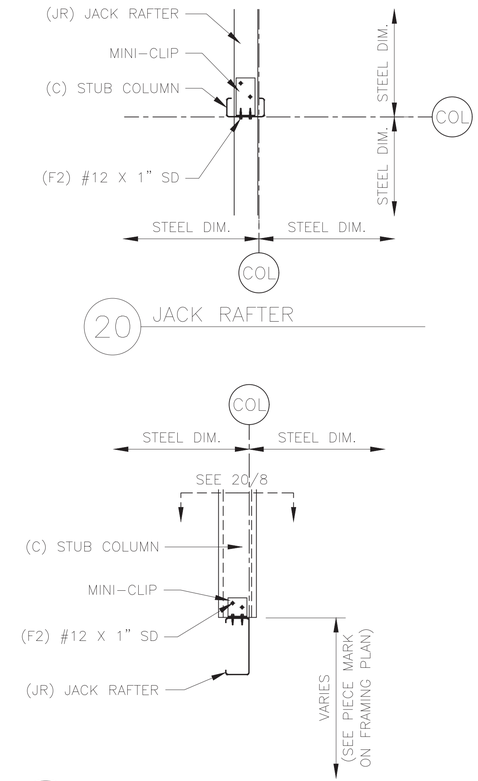

20 JACK RAFTER

21 JACK RAFTERS AT STUB COLUMN

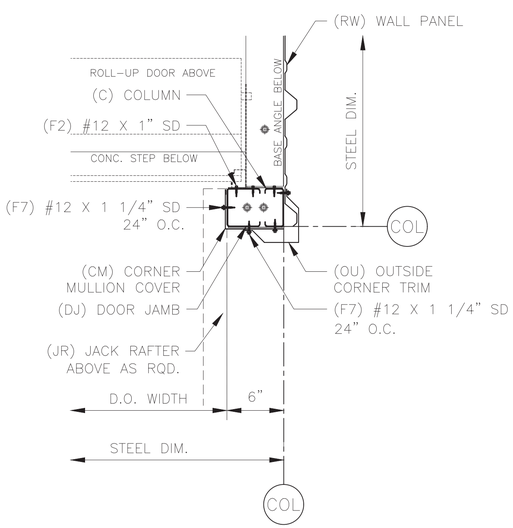

22 DOOR JAMB – 6" CORNER AT JACK RAFTER

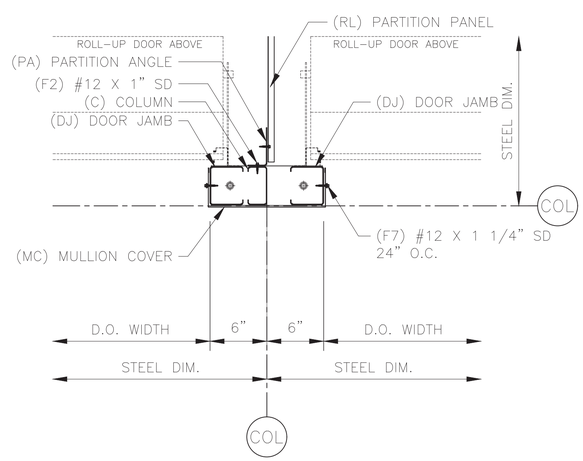

ERECTOR NOTE:
BASE CHANNEL IS 1/4" SHORTER THAN MULLION.
CENTER BASE CHANNEL ON CENTERLINE OF BAY.

23 DOOR MULLION AT TRANSVERSE HALLWAYS

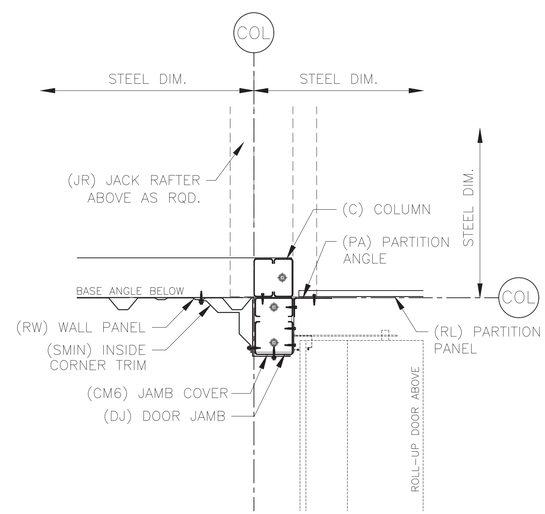

24 INSIDE CORNER

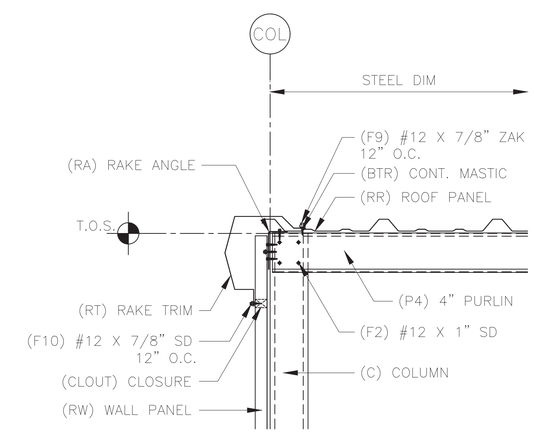

25 RAKE

RICHARD K. JOYCE
REGISTERED ENGINEER
OCT 25 2023
NO. 108262
STATE OF TENNESSEE

CONSTRUCTION PRINTS ISSUED FOR	KF	10/12/23
	BY	DATE

CONFIDENTIAL AND PROPRIETARY INFORMATION

THESE DRAWINGS ARE THE SOLE AND EXCLUSIVE PROPERTY OF THE BUILDING MANUFACTURER, SENSITIVE, PRIVILEGED, AND CONFIDENTIAL INFORMATION CONTAINED IN THESE DRAWINGS WAS PROVIDED ONLY TO BUILDING MANUFACTURER'S CUSTOMER FOR THE BENEFIT. THE DISCLOSURE OF THESE DRAWINGS TO UNAUTHORIZED PERSONS IS STRICTLY PROHIBITED. THESE DRAWINGS MAY NOT BE USED TO CONSTRUCT LIKE PRODUCTS WITHOUT WRITTEN PERMISSION FROM THE BUILDING MANUFACTURER. THIS DOCUMENT AND ALL COPIES MUST BE RETURNED UPON DEMAND.

PROJECT:
32 x 174 x 10-4 LS

LOCATION:
Benton, TN 37307

Sunward Corporation
6800 E. Hampden Ave.
Denver, CO 80224
Phone: 303-758-4141
Fax: 303-758-2735

DWG #23-1084-CL6

Sheet

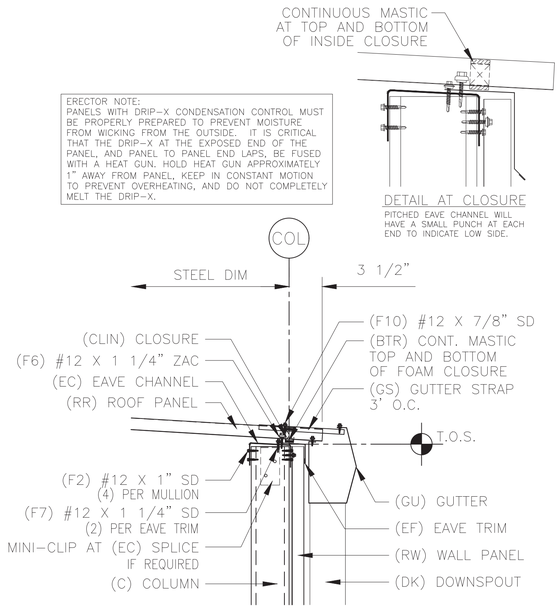

26 LOW EAVE WITH GUTTER

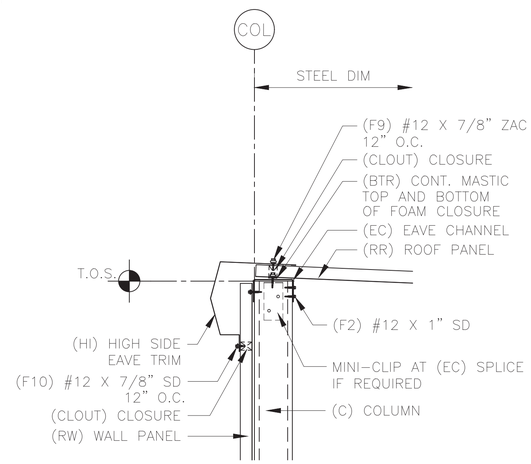

27 HIGH EAVE

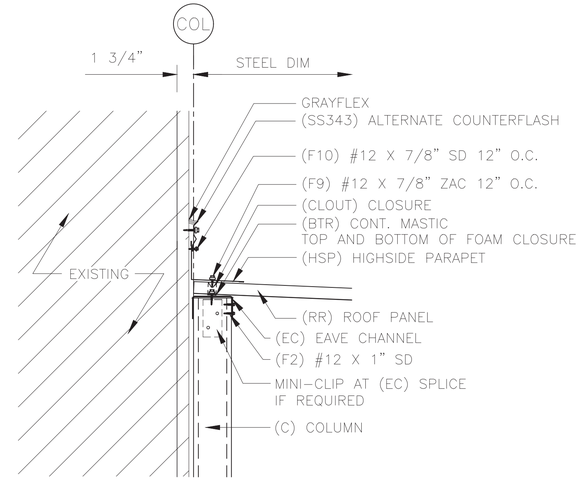

28 HIGH EAVE AT EXISTING

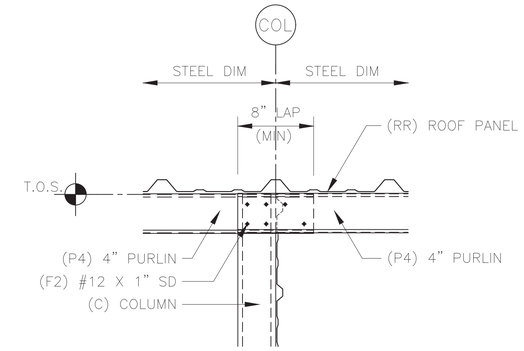

29 4" PURLIN LAP SIDE

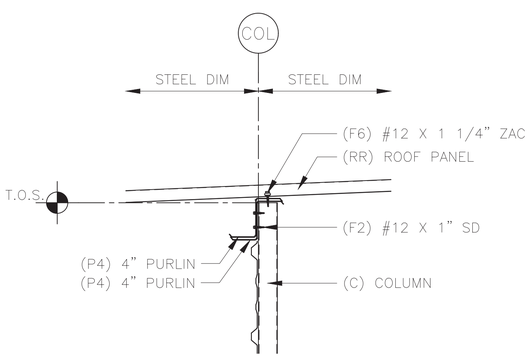

30 4" PURLIN LAP SECTION

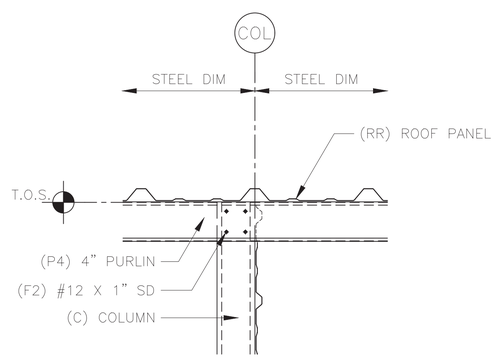

31 4" PURLIN SIDE

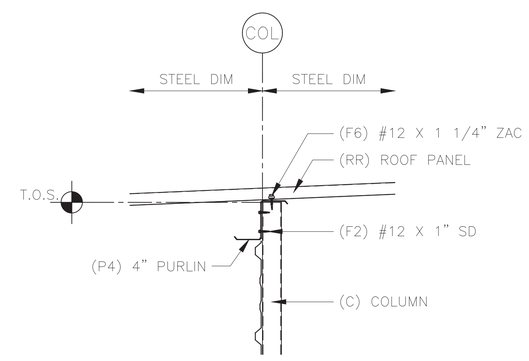

32 4" PURLIN SECTION

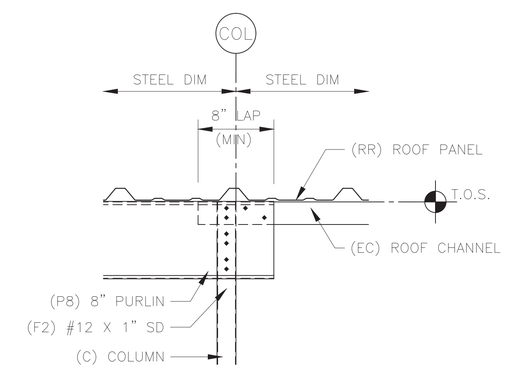

33 PURLIN LAP SIDE
8" PURLIN TO ROOF CHANNEL

RICHARD K. JOYCE
REGISTERED ENGINEER
OCT 25 2023
NO. 108262
STATE OF TENNESSEE

CONSTRUCTION	KF	10/12/23
PRINTS ISSUED FOR	BY	DATE

CONFIDENTIAL AND PROPRIETARY INFORMATION
THESE DRAWINGS ARE THE SOLE AND EXCLUSIVE PROPERTY OF THE BUILDING MANUFACTURER, SENSITIVE, PRIVILEGED, AND CONFIDENTIAL INFORMATION CONTAINED IN THESE DRAWINGS WAS PROVIDED FOR THE BENEFIT. THE DISCLOSURE OF THESE DRAWINGS TO UNAUTHORIZED PERSONS IS STRICTLY PROHIBITED. THESE DRAWINGS MAY NOT BE USED TO CONSTRUCT LIKE PRODUCTS WITHOUT WRITTEN PERMISSION FROM THE BUILDING MANUFACTURER. THIS DOCUMENT AND ALL COPIES MUST BE RETURNED UPON DEMAND.

PROJECT:
32 x 174 x 10-4 LS

LOCATION:
Benton, TN 37307

Sunward Corporation
6800 E. Hampden Ave.
Denver, CO 80224
Phone: 303-758-4141
Fax: 303-758-2735

DWG #23-1084-CL6

Sheet
9 of 11

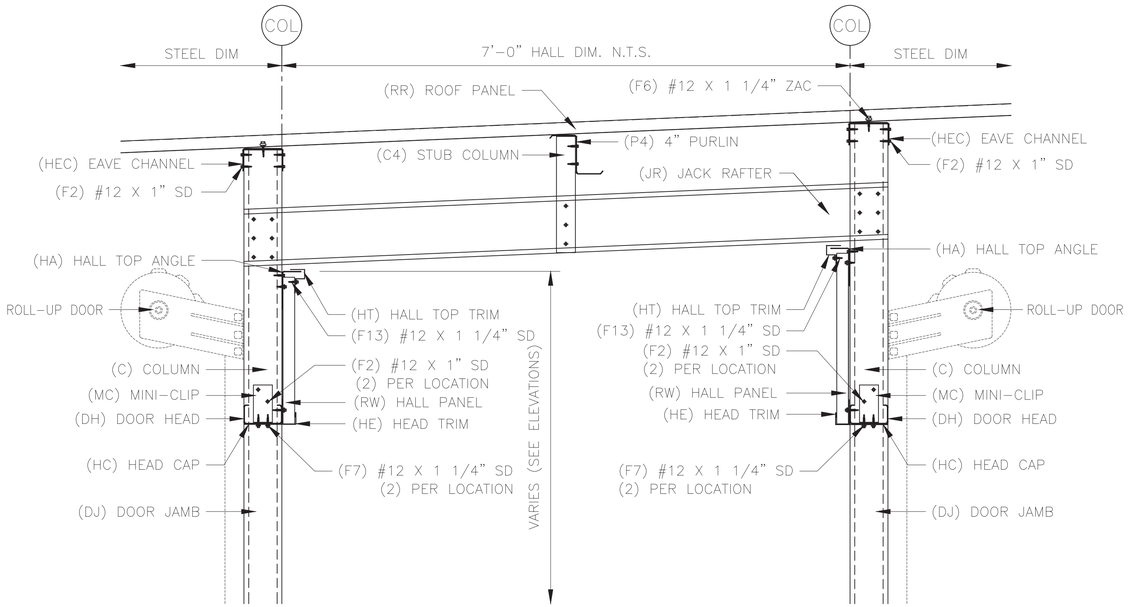

34 HALL CHANNEL AT ROOF

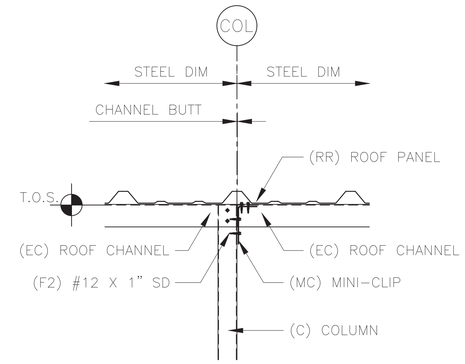

35 ROOF CHANNEL SPLICE
SIDE VIEW

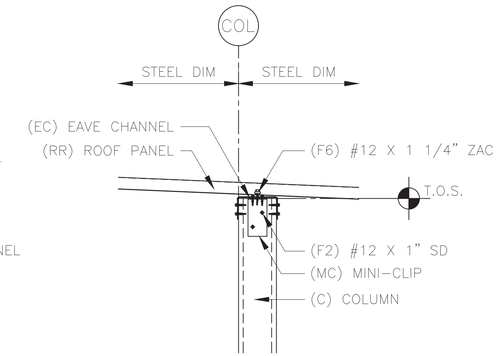

36 ROOF CHANNEL SPLICE
SECTION VIEW

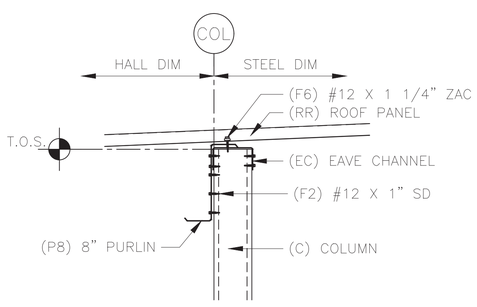

37 PURLIN LAP SECTION
8" PURLIN TO ROOF CHANNEL

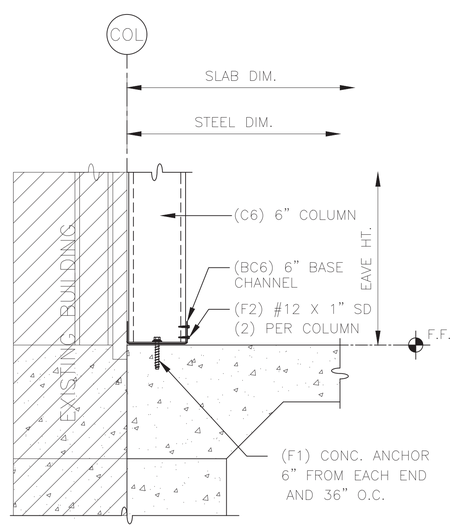

38 BASE CHANNEL AT EXISTIING

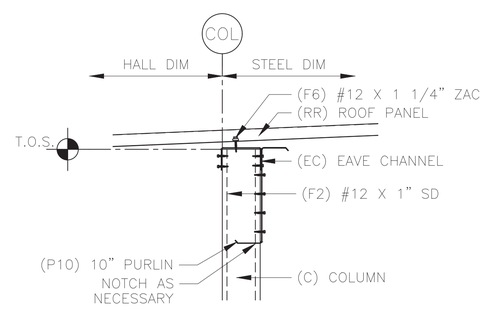

39 PURLIN LAP SECTION
10" PURLIN TO ROOF CHANNEL

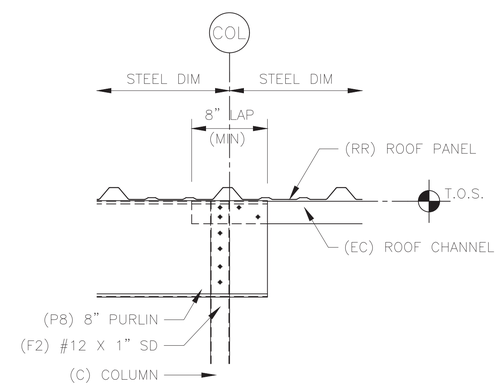

40 PURLIN LAP SIDE
8" PURLIN TO ROOF CHANNEL

RICHARD K. JOYCE
REGISTERED ENGINEER
OCT. 25, 2023
NO. 108262
TENNESSEE
STATE OF TENNESSEE

CONSTRUCTION	KF	10/12/23
PRINTS ISSUED FOR	BY	DATE

CONFIDENTIAL AND PROPRIETARY INFORMATION

THESE DRAWINGS ARE THE SOLE AND EXCLUSIVE PROPERTY OF THE BUILDING MANUFACTURER, SENSITIVE, PRIVILEGED, AND CONFIDENTIAL INFORMATION CONTAINED HEREIN. THESE DRAWINGS MAY ONLY BE USED FOR THE BENEFIT, THE DISCLOSURE OF THESE DRAWINGS TO UNAUTHORIZED PERSONS IS STRICTLY PROHIBITED. THESE DRAWINGS MAY NOT BE USED TO CONSTRUCT LIKE PRODUCTS WITHOUT WRITTEN PERMISSION FROM THE BUILDING MANUFACTURER. THIS DOCUMENT AND ALL COPIES MUST BE RETURNED UPON DEMAND.

PROJECT:
32 x 174 x 10-4 LS

LOCATION:
Benton, TN 37307

Sunward Corporation
6800 E. Hampden Ave.
Denver, CO 80224
Phone: 303-758-4141
Fax: 303-758-2735

DWG #23-1084-CL6

Sheet

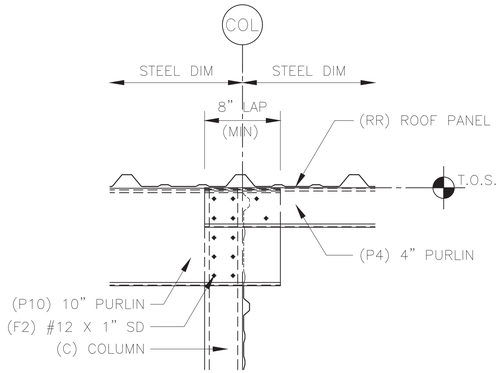

41 PURLIN LAP SIDE
10" PURLIN TO 4" PURLIN

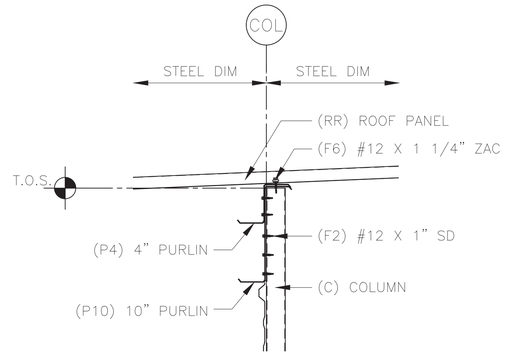

42 PURLIN LAP SECTION
10" PURLIN TO 4" PURLIN

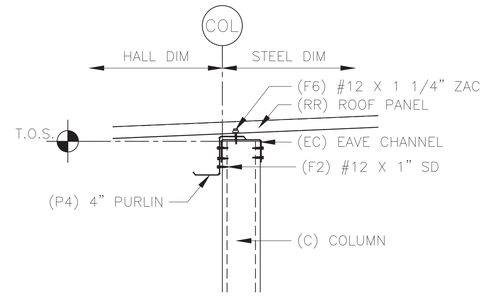

43 PURLIN LAP SECTION
4" PURLIN TO ROOF CHANNEL

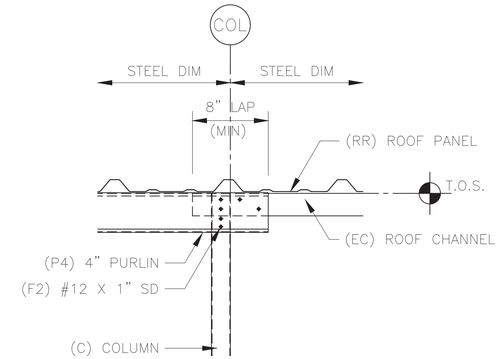

44 PURLIN LAP SIDE
4" PURLIN TO ROOF CHANNEL

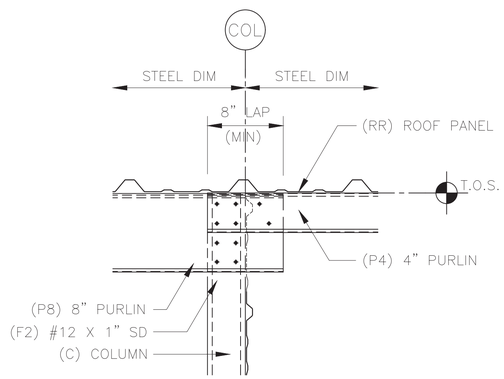

45 PURLIN LAP SIDE
8" PURLIN TO 4" PURLIN

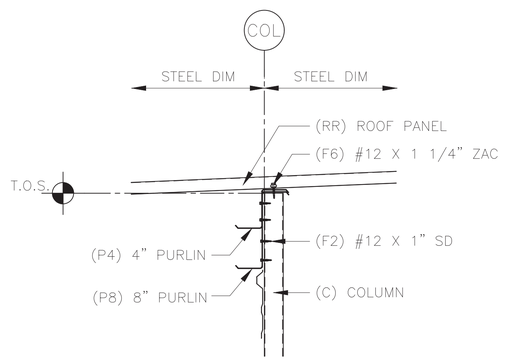

46 PURLIN LAP SECTION
8" PURLIN TO 4" PURLIN

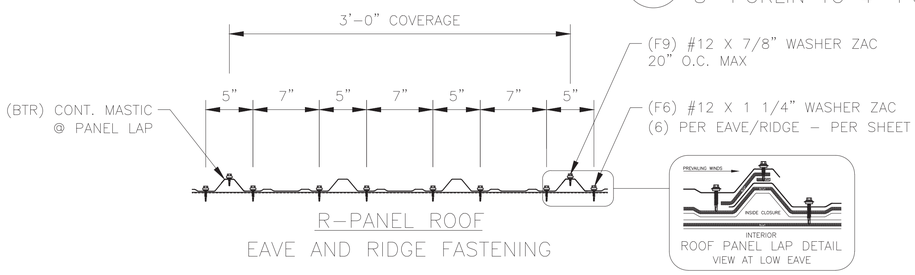

R-PANEL ROOF
EAVE AND RIDGE FASTENING

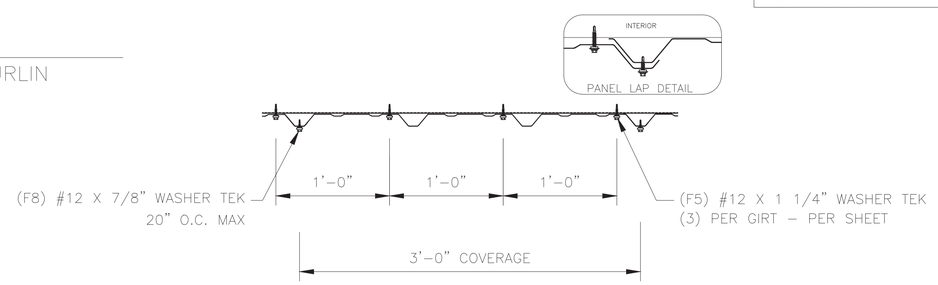

R-PANEL WALL
EAVE AND BASE FASTENING

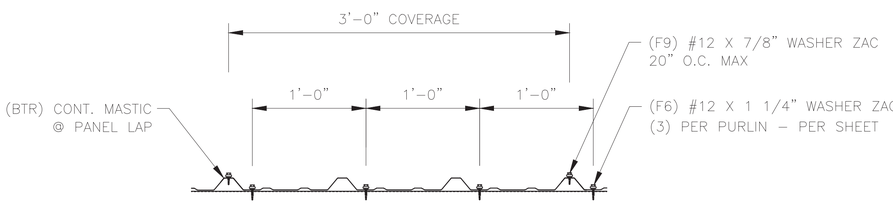

R-PANEL ROOF
PURLIN FASTENING

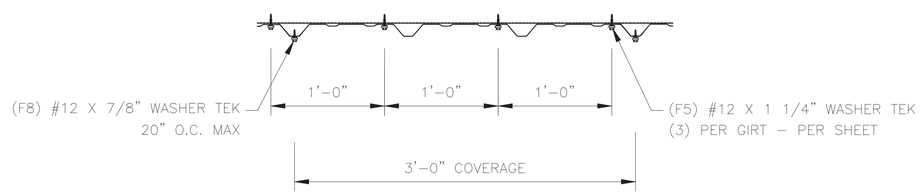

R-PANEL WALL
GIRT AND DOOR HEAD FASTENING

ERECTOR NOTE:
PARTITION PANELS HAVE BEEN SUPPLIED TO THE APPROXIMATE ROOF LINE. NOTCH TOP PARTITION PANEL TO MATCH ROOF LINE AND CLEAR PURLIN LEG AS NEEDED TO CLOSE IN THE UNIT. PARTITION PANELS MAY BE BACK LAPPED TO CLEAR PURLINS.

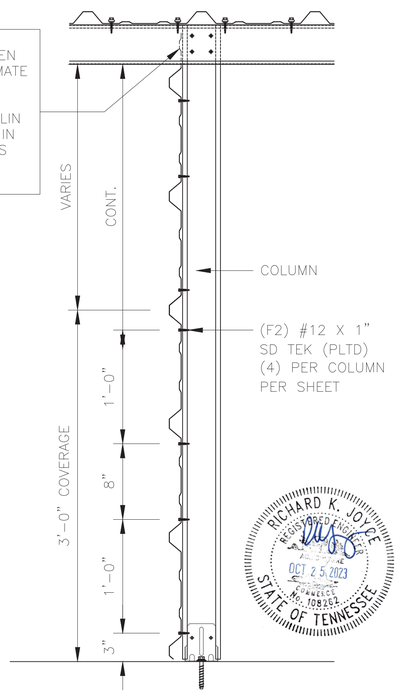

R-PANEL PARTITION
SHEET FASTENING LAYOUT

CONSTRUCTION PRINTS ISSUED FOR	KF	10/12/23
	BY	DATE

CONFIDENTIAL AND PROPRIETARY INFORMATION

THESE DRAWINGS ARE THE SOLE AND EXCLUSIVE PROPERTY OF THE BUILDING MANUFACTURER, SENSITIVE, PRIVILEGED, AND CONFIDENTIAL INFORMATION CONTAINED IN THESE DRAWINGS MAY ONLY BE USED FOR THE BENEFIT. THE DISCLOSURE OF THESE DRAWINGS TO UNAUTHORIZED PERSONS IS STRICTLY PROHIBITED. THESE DRAWINGS MAY NOT BE USED TO CONSTRUCT LIKE PRODUCTS WITHOUT WRITTEN PERMISSION FROM THE BUILDING MANUFACTURER. THIS DOCUMENT AND ALL COPIES MUST BE RETURNED UPON DEMAND.

PROJECT:
32 x 174 x 10-4 LS

LOCATION:
Benton, TN 37307

Sunward Corporation
6800 E. Hampden Ave.
Denver, CO 80224
Phone: 303-758-4141
Fax: 303-758-2735

DWG #23-1084-CL6

Sheet