OVERLAYS

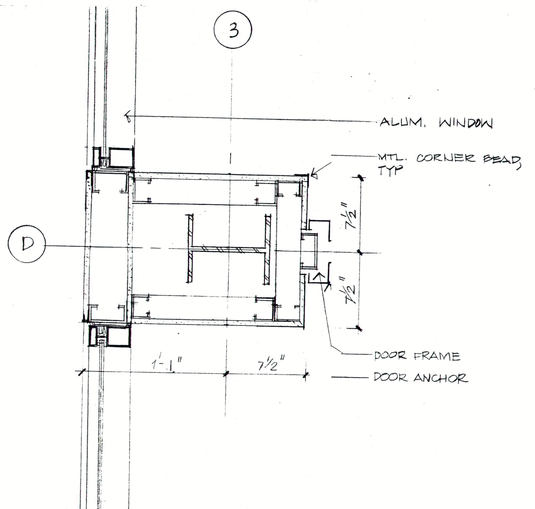

17 PLAN DETAIL @ 2-ND FLOOR - CCE 206
1½" = 1'-0"

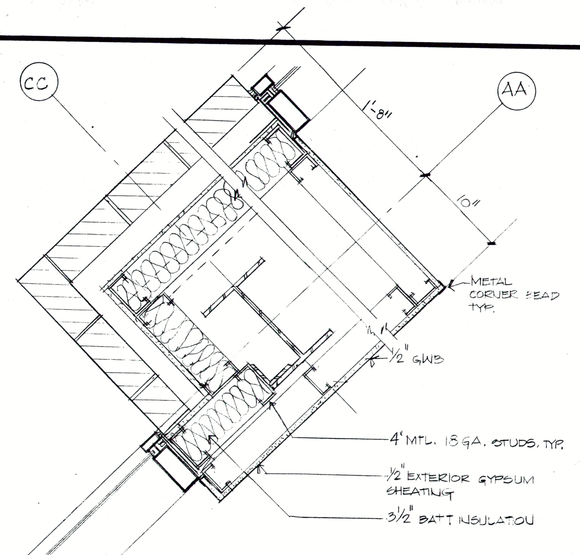

13 PLAN DETAIL @ 2-ND FLOOR - EXTERIOR ATRIUM WALL
1½" = 1'-0"

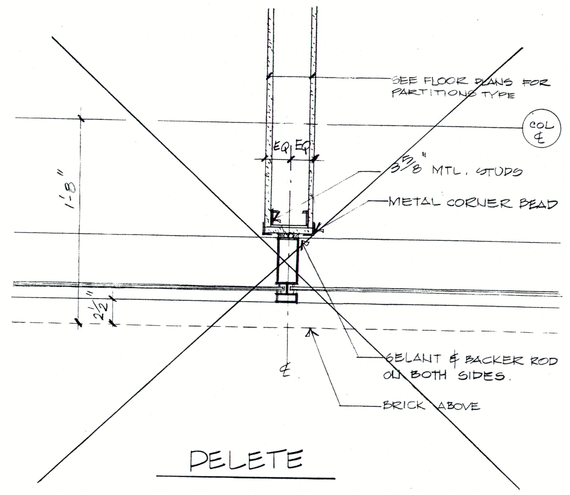

9 1½" = 1'-0"

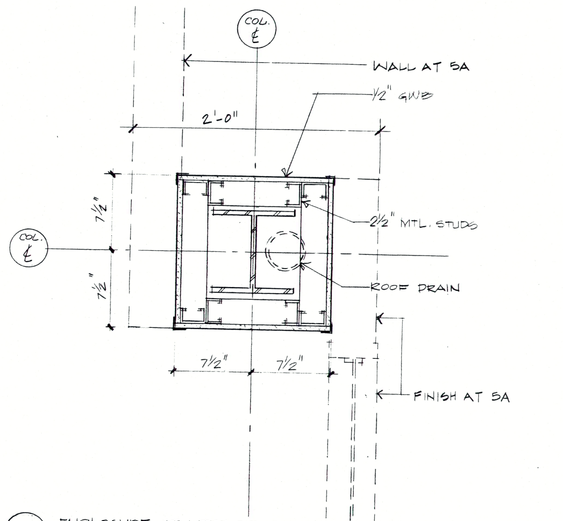

5 ENCLOSURE AT INTERIOR COLUMN (TYP)
1½" = 1'-0"

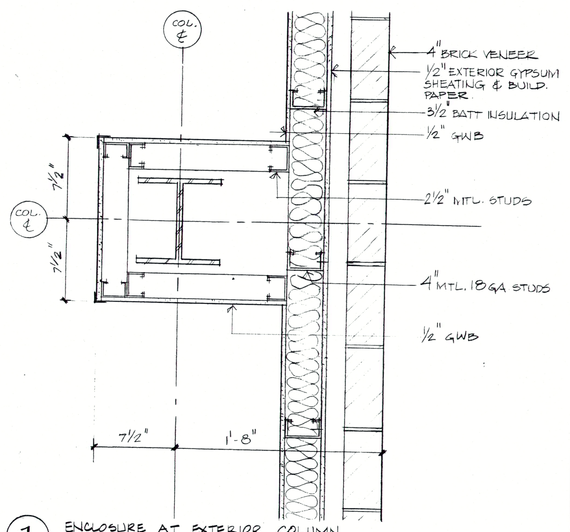

1 ENCLOSURE AT EXTERIOR COLUMN
1½" = 1'-0"

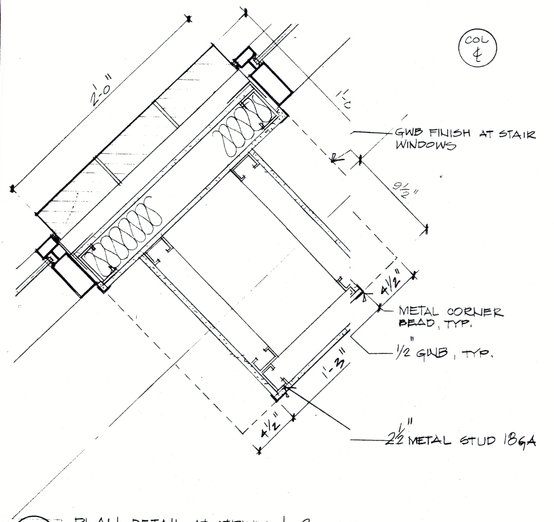

18 PLAN DETAIL AT ATRIUM & 2ND FLR OFFICES
1½" = 1'-0"

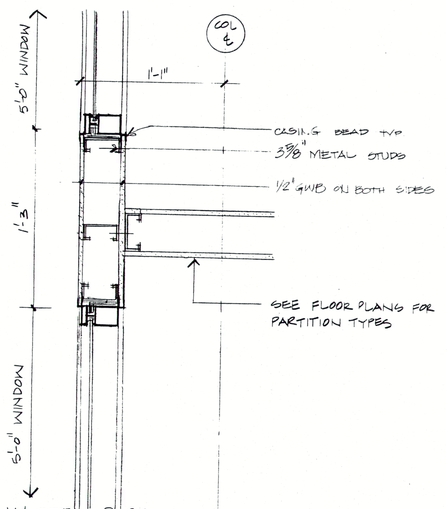

14 PLAN DETAIL @ 2ND FLOOR - INTERIOR ATRIUM WALL
1½" = 1'-0"

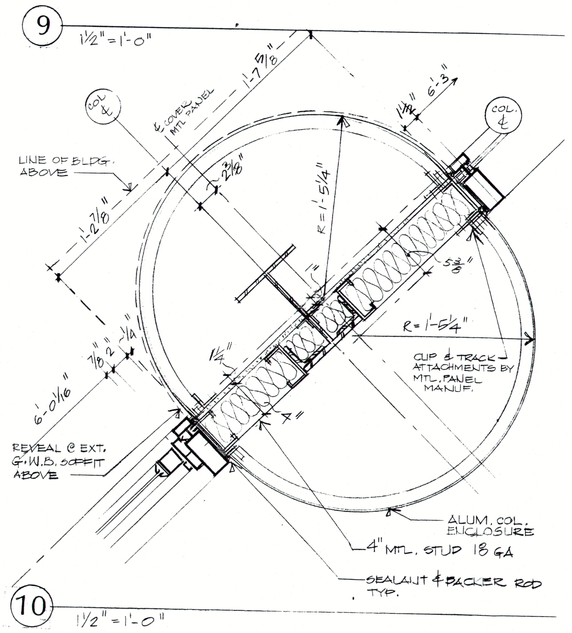

10 1½" = 1'-0"

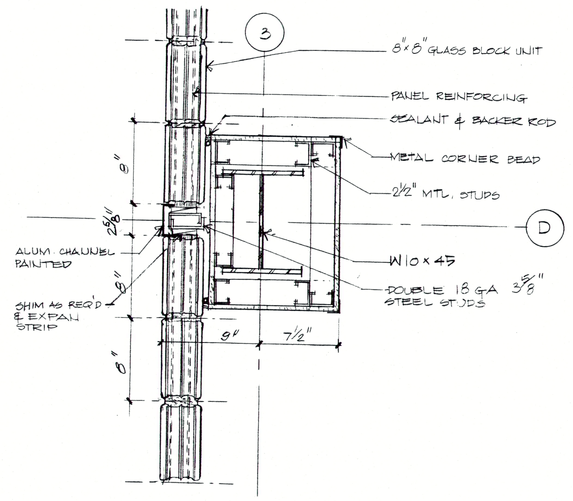

6 PLAN DETAIL @ 1-ST FLOOR - GLASS BLOCK WALL
1½" = 1'-0"

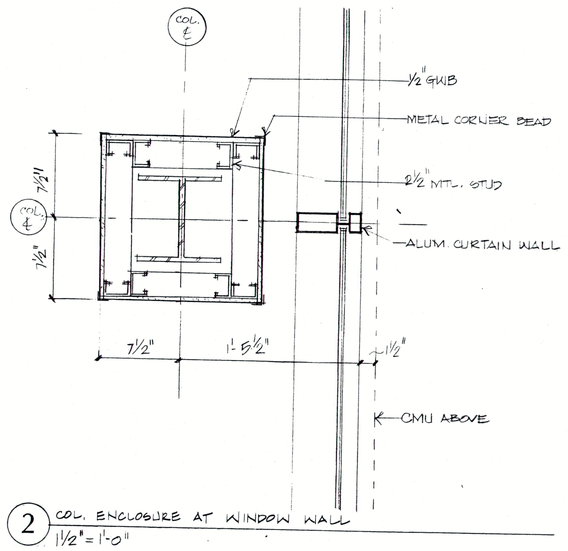

2 COL. ENCLOSURE AT WINDOW WALL
1½" = 1'-0"

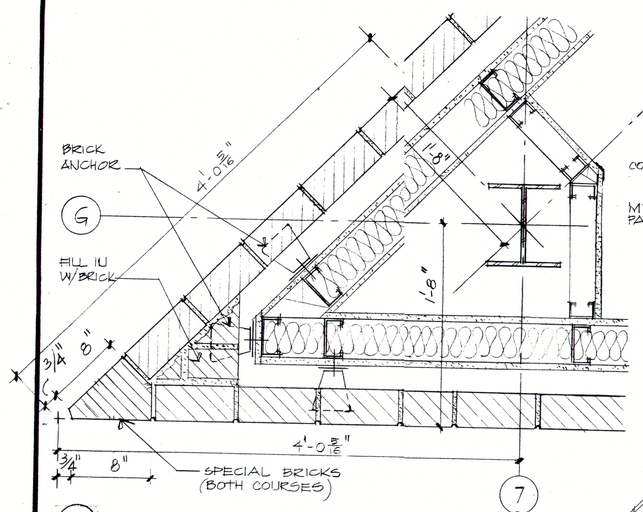

19 1½" = 1'-0"

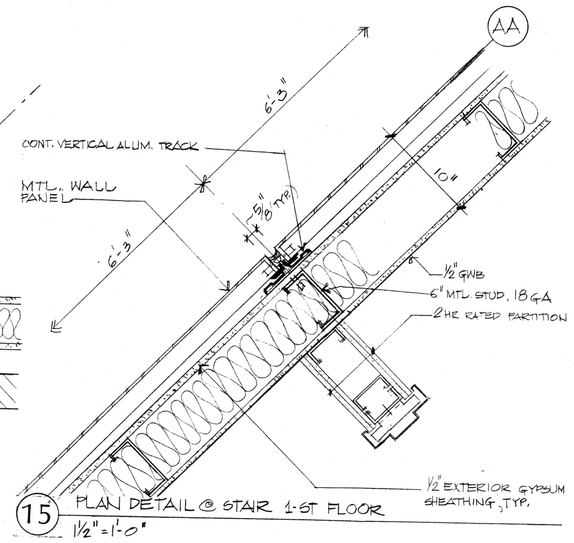

15 PLAN DETAIL @ STAIR 1-ST FLOOR
1½" = 1'-0"

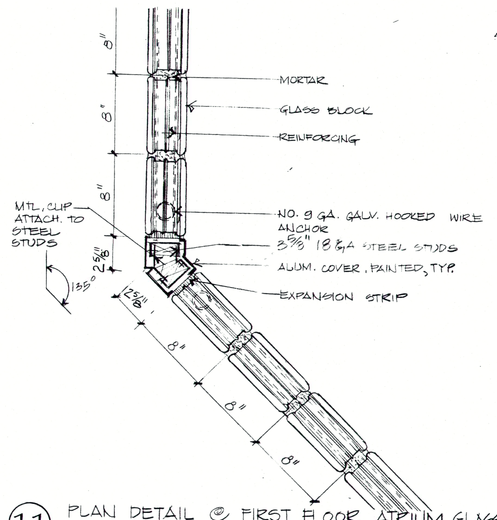

11 PLAN DETAIL @ FIRST FLOOR ATRIUM GLASS BLOCK
1½" = 1'-0"

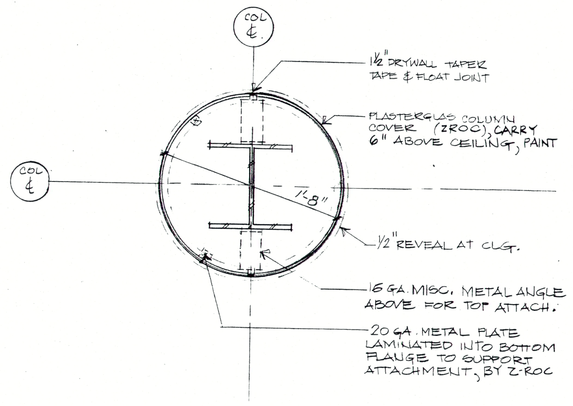

7 PLAN DETAIL AT INTERIOR COLUMN
1½" = 1'-0"

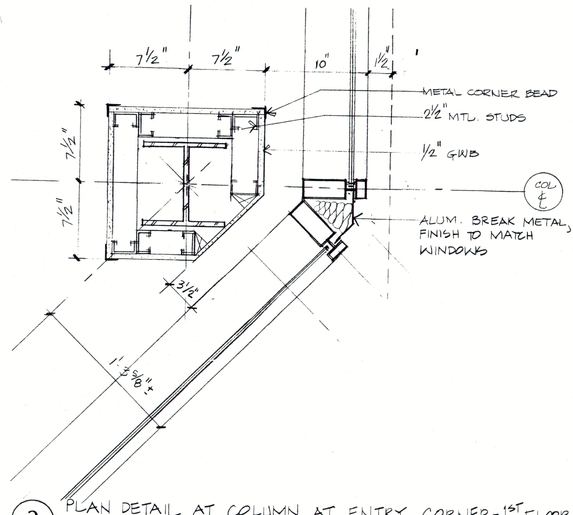

3 PLAN DETAIL AT COLUMN AT ENTRY CORNER - 1ST FLOOR
1½" = 1'-0"

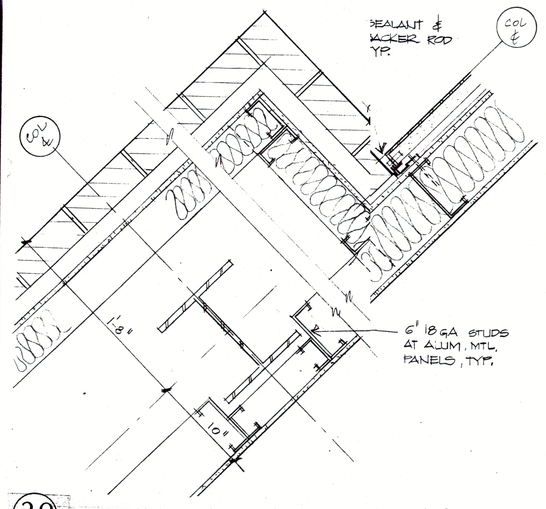

20 1½" = 1'-0"

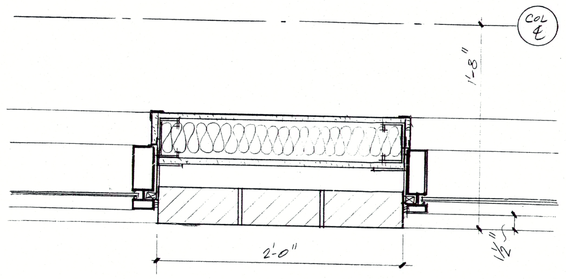

16 1½" = 1'-0"

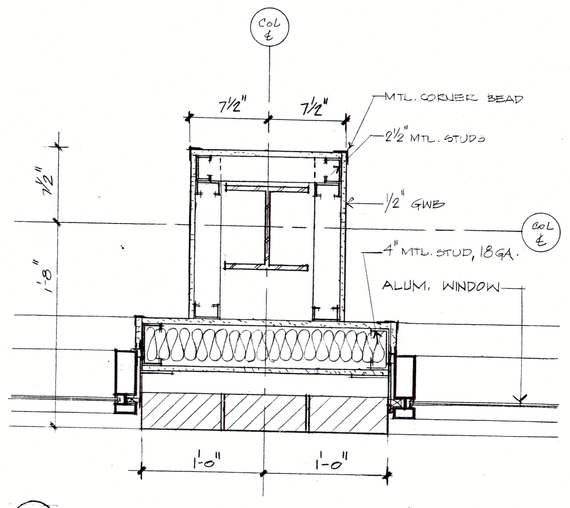

12 1½" = 1'-0"

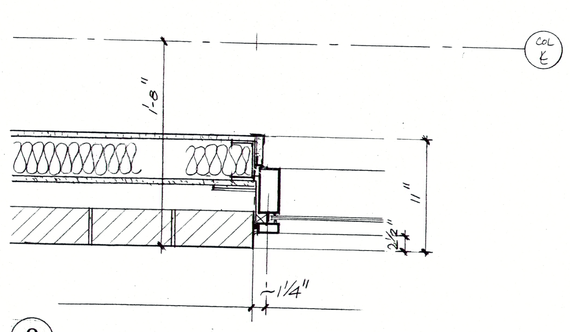

8 1½" = 1'-0"

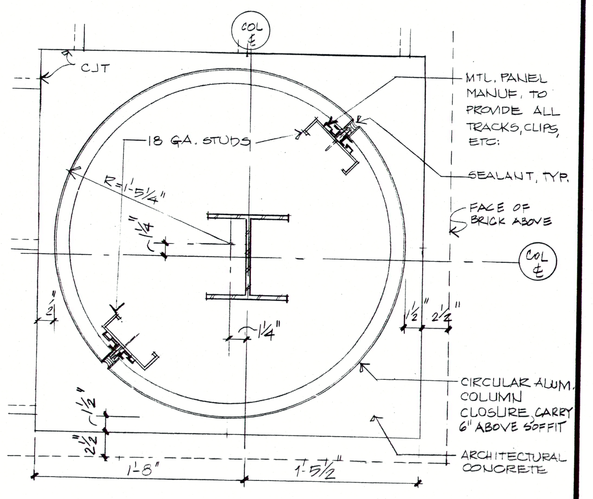

4 PLAN DETAIL AT COLUMN AT ENTRY
1½" = 1'-0"

NOTES:

1. ALL STUDS AT POSTS IN ATRIUM GLASS BLOCK WALLS TO BE 18 GA.
2. SEE 1/A5-1 FOR NOTES REGARDING CAPPING OF MTL. COLUMN COVERS.
3. SEE NOTE #1 ON A5-1.
4. AT GLASS BLOCK WALL ON FIRST FLOOR, CONTRACTOR'S OPTION TO USE H.M. FRAMES (2"x4" ACTUAL) IN LIEU OF 18 GA STUDS & ALUM. TRIM. THIS INCLUDES ALL FRAMES AROUND GLASS BLOCK & FIXED GLASS ABOVE GLASS BLOCK, & FRAMES FOR DOORS 108 B & 112 C. DOORS 108 B & 112 C MAY BE H.M., FULLY GLAZED WITH ¼" TEMPERED GLASS.

Sasaki Associates, Inc.

Planning / Architecture / Landscape Architecture
Urban Design / Civil Engineering / Environmental Services

64 Pleasant Street, Watertown, Massachusetts 02172
617/926 3300 Telex 92/2471

NO.	DATE	REVISION

STATE OF CONNECTICUT — RUSSELL CIRCUIT — REGISTERED ARCHITECT

Salmon Brook Corporate Park

A-Copy Offices

Glastonbury, Connecticut

TITLE: Enlarged Plan Details

Scale 1½" = 1'-0" Date 2-12-87
Drawn By ES
Checked By EM
Approved By
Project No. 5649.02

DWG. NO. A4-1

PROJECT NUMBER/PHASE:
PROJECT TITLE:
SHEET NUMBER:
SHEET TITLE:
DATE: