HURRICANE DAMAGE - REPAIRS
SKYBAR AT 47TH LLC
1313 SE 47TH TER, CAPE CORAL FL 33904
STRAP: 07-45-24-C3-00360.0250 Folio ID: 10190045

PROJECT INFORMATION

GENERAL NOTES

THE CONTRACTOR SHALL VISIT THE SITE AND FAMILIARIZE HIMSELF WITH THE EXISTING CONDITIONS AND NOTIFY THE ARCHITECT OF ANY DISCREPANCIES IN WRITING PRIOR TO SUBMITTING HIS BID.

THE CONTRACTOR SHALL VISIT THE PROJECT SITE PRIOR TO THE SUBMISSION OF ANY BIDS, AND VERIFY THE ARCHITECTS DIMENSIONS, DETAILS AND INFORMATION PERTAINING TO THE PROJECT. IF ANY DISCREPANCIES, CONFLICTING INFORMATION, ERRORS OR OMISSIONS ARE PRESENT, THE CONTRACTOR SHALL NOTIFY THE ARCHITECT AND OWNER IMMEDIATELY IN WRITING. ANY DISCREPANCY, OR CONFLICT NOT BROUGHT TO THE ATTENTION OF THE ARCHITECT AND OWNER PRIOR TO THE FINAL BID SUBMISSION SHALL BE CORRECTED BY THE CONTRACTOR AT NO ADDITIONAL COST TO THE OWNER.

THE CONTRACTOR SHALL NOT SCALE THE DRAWINGS. WRITTEN DIMENSIONS TAKE PRECEDENCE OVER SCALED DIMENSIONS.

THE GENERAL CONTRACTOR AND ALL SUBCONTRACTORS SHALL CARRY PUBLIC LIABILITY, PROPERTY, AND WORKMEN'S COMPENSATION INSURANCE. VALID CERTIFICATES OF ALL SHALL BE PROVIDED.

THE CONTRACTOR SHALL INCLUDE ALL WORK NECESSARY TO ASSURE THE PROJECTS COMPLIANCE WITH THE MOST STRINGENT REQUIREMENTS OF THE FLORIDA BUILDING CODE, CURRENT LOCAL EDITION, NFPA-101 AND ALL OTHER REGULATION CODES.

THE CONTRACTOR SHALL OBTAIN ALL PERMITS, AND SECURE ALL CERTIFICATES OF INSPECTION AND OCCUPANCY THAT ARE REQUIRED BY THE GOVERNING JURISDICTION. THE OWNER SHALL RECEIVE A COPY OF THE PERMIT UPON ISSUANCE.

THE CONTRACTOR SHALL REFERENCE THE BUILDING SHELL DRAWINGS FOR ALL INFORMATION RELATIVE TO THE BUILDING SHELL AND FOR COORDINATION OF NEW WORK.

THE GENERAL CONTRACTOR AND ALL SUBCONTRACTORS/VENDORS SHALL FAMILIARIZE THEMSELVES WITH AND CONFORM TO ALL REQUIREMENTS SET FORTH BY THE BUILDING OWNER OR MUNICIPALITY RELATIVE TO THE HOURS OF WORK.

THE CONTRACTOR SHALL SUBMIT A DETAILED CONSTRUCTION SCHEDULE COORDINATION ALL SUBCONTRACTORS, SUPPLIERS AND VENDORS.

THE CONTRACTOR SHALL NOT ALLOW ON THE PROJECT ANY MATERIALS CONTAINING ASBESTOS, PETROLEUM OR PCB.

THE CONTRACTOR SHALL BE RESPONSIBLE FOR OBTAINING AND DISTRIBUTING ALL CURRENT DRAWINGS TO THE SUBCONTRACTORS/VENDORS AS WELL AS SUPERVISING AND COORDINATING THE WORK OF ALL TRADES IN ACCORDANCE WITH THE SPECIFICATIONS AND MAKING ADJUSTMENTS IN LAYOUT AS REQUIRED. THE ARCHITECT SHALL BE NOTIFIED PRIOR TO THE EXECUTION OF THEIR REVISIONS TO AVOID CONFLICT BETWEEN TRADES FOR PROPER EXECUTION OF THE WORK.

THE CONTRACTOR SHALL INSTALL ANY APPARATUS, APPLIANCE, MATERIAL OR WORK NOT SHOWN ON THE DRAWINGS BUT MENTIONED IN THE SPECIFICATIONS , OR VICE VERSA, OR ANY INCIDENTAL ACCESSORIES NECESSARY FOR COMPLETION OF THE WORK FOR OPERATION WITHOUT ADDITIONAL EXPENSE TO OWNER.

THE CONTRACTOR SHALL COORDINATE ALL OWNER/TENANT SUPPLIED ITEMS AND INCORPORATE THE INSTALLATION INTO THE CONSTRUCTION SCHEDULE.

THE CONTRACTOR SHALL PROVIDE ANY TEMPORARY UTILITIES INCLUDING, ELECTRICAL, WATER, AND TELEPHONE REQUIRED FOR THE COMPLETION OF THE PROJECT.

THE CONTRACTOR SHALL HAVE A DIGITAL CAMERA ON SITE TO DOCUMENT ANY ISSUES THAT MAY NEED TO BE CLARIFIED. THESE PICTURES SHALL BE EMAILED TO THE ARCHITECT ALONG WITH AN RFI FOR CLARIFICATION.

THE CONTRACTOR SHALL PROVIDE AT ALL TIMES PROTECTION FROM THE WEATHER AND EXCESSIVE DUST THAT MAY IN ANY WAY DAMAGE THE WORK, MATERIAL, FIXTURES, AND EQUIPMENT, OR PRESENT DANGER TO PERSONNEL. ANY WORK UNDER CONTRACT BY THE GENERAL CONTRACTOR DAMAGED BY A FAILURE TO PROVIDE ADEQUATE PROTECTION SHALL BE REMOVED AND REPLACED WITH NEW WORK AT THE SOLE EXPENSE OF THE CONTRACTOR.

THE CONTRACTOR SHALL MAINTAIN THE JOB SITE FREE FROM RUBBISH AND DEBRIS. DISPOSAL OF ALL CONSTRUCTION DEBRIS SHALL CONFORM TO BUILDING REGULATIONS.

THE CONTRACTOR SHALL RUN FIRE RATED WALLS AND PARTITIONS TO UNDERSIDE OF RATED ROOF/CEILING ASSEMBLY ABOVE: TAPE AND SEAL JOINTS. PROVIDE FIRE DAMPERS AT DUCT PENETRATIONS AS REQUIRED BY CODE. TAPE AND SEAL OTHER PENETRATIONS TO MAINTAIN INTEGRITY OF FIRE-RATED PARTITION USING ONLY UL APPROVED MATERIAL.

THE CONTRACTOR SHALL FINISH GYPSUM WALLBOARD ABUTTING OTHER MATERIAL WITH METAL EDGE STRIPS. CONCEAL PIPING, DUCTWORK, AND CONDUIT.

THE CONTRACTOR SHALL BACK ALL ELECTRICAL CABINETS, FIRE EXTINGUISHERS, CABINETS AND OTHER RECESSED EQUIPMENT LOCATED IN FIRE-RATED WALLS WITH 5/8"TYPE 'X' GYPSUM BOARD AS REQUIRED TO MAINTAIN THE RATING.

THE CONTRACTOR SHALL PROVIDE BRACING OR BLOCKING AS REQUIRED TO SUPPORT WALL MOUNTED EQUIPMENT: CABINETS, GRILLES, DOORS, WINDOWS, ETC.. WOOD BLOCKING SHALL BE FIRE RETARDANT TREATED. METAL STUDS MAY BE USED IN LIEU OF WOOD BLOCKING.

THE CONTRACTOR SHALL NOT CUT ANY STEEL, WOOD, OR OTHER MAIN STRUCTURAL MEMBERS WITHOUT WRITTEN APPROVAL OF THE STRUCTURAL ENGINEER.

ANY ROOM, WALL, FLOOR, OR CEILING FINISH NOT SCHEDULED SHALL BE ASSUMED TO BE IDENTICAL TO THE CLOSEST ROOM OF SIMILAR USE AND TYPE FOR PURPOSES OF BIDDING AND CONSTRUCTION. NOTIFY THE ARCHITECT OF ANY OBSERVED APPARENT DISCREPANCIES IN WRITING PRIOR TO COMMENCING WITH THE WORK.

ANY DETAIL NOT SPECIFICALLY REFERENCED SHALL BE ASSUMED TO BE SIMILAR TO THAT SHOWN IN THE CLOSEST POSITION WHERE A SIMILAR CONDITIONS OCCURS FOR THE PURPOSES OF BIDDING AND CONSTRUCTION. NOTIFY THE ARCHITECT IN WRITING OF ANY OBSERVED APPARENT DISCREPANCIES PRIOR TO COMMENCING WITH THE WORK.

WHERE TWO OR MORE DETAILS, MATERIALS, OR CONDITIONS OCCUR IN APPARENT CONFLICT, THE CONTRACTOR SHALL INCLUDE THE MOST COST EFFECTIVE SOLUTION IN HIS BID AND NOTIFY THE ARCHITECT OF ANY APPARENT DISCREPANCIES PRIOR TO START CONSTRUCTION.

THE CONTRACTOR SHALL PROVIDE UPON COMPLETION OF THE WORK A SET OF "AS-BUILT" NEATLY MARKED UP PLANS, THE ELECTRICAL CONTRACTORS "AS-BUILT" DRAWINGS SHALL BE INCLUDED. THESE DRAWINGS SHALL BE TRANSMITTED TO THE OWNER.

ABBREVIATIONS

AB	ANCHOR BOLT	GL	GLASS	PNL	PANEL
A/C	AIR CONDITIONING	GR	GRADE	PNT	PAINT
AFF	ABOVE FINISH FLOOR	GYP	GYPSUM	POL	POLISHED
ALUM	ALUMINUM	HB	HOSE BIBB	PREFAB	PREFABRICATED
APPROX	APPROXIMATE	HCP	HANDICAP	PROJ	PROJECT
ARCH	ARCHITECTURAL	HDW	HARDWARE	PSF	POUNDS PER SQ. FOOT
BD	BOARD	HGT	HEIGHT	PSI	POUNDS PER SQ. INCH
BLDG	BUILDING	HM	HOLLOW METAL	PRTR	PRESSURE TREATED
BLK	BLOCK	HR	HOUR	PTD	PAINTED
BOTT	BOTTOM	HVAC	HEATING/VENTILATING/ AIR CONDITIONING	PVMT	PAVEMENT
BRG	BEARING			QTY	QUANTITY
BTWN	BETWEEN	HW	HOT WATER	REF	REFRIGERATOR
CAB	CABINET	IN	INCH	REQD	REQUIRED
CLG	CEILING	INCAND	INCANDESCENT	REINF	REINFORCING
CEM	CEMENT	INCL	INCLUDE	RET	RETURN
CL	CLOSET	INFO	INFORMATION	REV	REVERSE, REVISION
CLR	CLEAR	INSUL	INSULATE/INSULATION	RGD	RIGID
COL	COLUMN	INT	INTERIOR	RM	ROOM
CONC	CONCRETE	KIT	KITCHEN	RO	ROUGH OPENING
CONSTR	CONSTRUCTION	LAM	LAMINATED	SCHED	SCHEDULE
CONT	CONTINUOUS	LAV	LAVATORY	SD	SOAP DISPENSER
CONTR	CONTRACTOR	LB	POUND	SEP	SEPARATE
CT	CERAMIC TILE	LIN	LINEAR	SECT	SECTION
CTR	CENTER	LL	LIVE LOAD	SHLF	SHELF
DEPT	DEPARTMENT	LT	LIGHT	SHT	SHEET
DET	DETAIL	LVR	LOUVER	SIM	SIMILAR
DF	DRINKING FOUNTAIN	MATL	MATERIAL	SPEC	SPECIFICATION
DIA	DIAMETER	MAX	MAXIMUM	SPKR	SPEAKER
DIM	DIMENSION	MECH	MECHANICAL	SQ	SQUARE
DN	DOWN	MEMB	MEMBRANE	STD	STANDARD
DR	DOOR	MTL	METAL	STL	STEEL
DWG	DRAWING	MFC	METAL FURRING CHAN	STOR	STORAGE
EA	EACH	MFR	MANUFACTURER	SUB	SUBSTITUTE
EL	ELEVATION	MIN	MINIMUM	SURF	SURFACE
ELEC	ELECTRICAL	MIR	MIRROR	SUSP	SUSPEND/SUSPENDED
EQ	EQUAL	MISC	MISCELLANEOUS	SYS	SYSTEM
EQUIP	EQUIPMENT	MO	MASONRY OPENING	T & G	TONGUE & GROOVE
EQUIV	EQUIVALENT	MR	MOISTURE RESISTANT	TEL	TELEPHONE
EW	EACH WAY	NAT	NATURAL	THK	THICK-THICKNESS
EXH	EXHAUST	NIC	NOT IN CONTRACT	TPH	TOILET PAPER HOLDER
EXIST	EXISTING	#	NUMBER	TRANS	TRANSFORMER
EXT	EXTERIOR/EXTERNAL	NOM	NOMINAL	TYP	TYPICAL
FD	FLOOR DRAIN	NTS	NOT TO SCALE	UGND	UNDERGROUND
FIN	FINISH	OA	OVERALL, OUTSIDE AIR	UL	UNDERWRITERS LAB.
FIX	FIXTURE	OC	ON CENTER	VERT	VERTICAL
FLR	FLOOR	OPG	OPENING	W/	WITH
FLUOR	FLUORESCENT	OPP	OPPOSITE	WC	WATER CLOSET
FTG	FOOTING	ORIG	ORIGINAL	WH	WATER HEATER
FURR	FURRING	PART	PARTITION	WM	WIRE MESH
GA	GAGE, GAUGE	PL	PLATE	W/O	WITHOUT
GALV	GALVANIZED	PLAS	PLASTER	WP	WATERPROOF
		PLYWD	PLYWOOD	WS	WEATHER STRIPPING
				WWF	WELDED WIRE FABRIC

SYMBOLS

DETAIL
2 / A-00 — DETAIL IDENTIFICATION #; SHEET WHERE DETAIL IS DRAWN

SECTION
2 / A-00 — SECTION IDENTIFICATION #; SHEET WHERE SECTION IS DRAWN

ELEVATION
2 / A-00 — ELEVATION IDENTIFICATION #; SHEET WHERE ELEVATION IS DRAWN

A — **GRID LINE**

INTERIOR ELEVATION
A, B, C, D / A-00 — ELEVATION IDENTIFICATION #; SHEET WHERE INTERIOR ELEVATION IS DRAWN

1 — **DOOR TAG**

A — **WINDOW TAG**

1 — **WALL TYPE**

+0'-0" — **ELEVATION MARK**

PROJECT DATA

SCOPE OF WORK:		COMMERCIAL IMPROVEMENTS FOR Brewery
		NEW ELECTRICAL WORK
		NEW HVAC WORK
		NEW PLUMBING WORK
		NEW EXTERIOR SHELL WORK
		REPAIR - NEW INTERIOR WALLS
		DEMOLITION WORK
		ADA COMPLAINCE

PROPERTY OWNER:		SKYBAR AT 47TH LLC 4913 SEVILLE CT CAPE CORAL FL 33914
ADDRESS:		1313 SE 47TH TER CAPE CORAL FL 33904
LEGAL DESCRIPTION:		CAPE CORAL UNIT 7 - BLK.360 PB 12 PG 124 - LOTS 25 + 26
PARCEL ID No /FOLIO:		STRAP: 07-45-24-C3-00360.0250 Folio ID: 10190045
BUILDING HEIGHT		TWO STORY
EXISTING BUILDING AREA:	SQ. FT.	**5,920**
AREA OF WORK:	SQ. FT.	**2,190**
TYPE OF CONSTRUCTION:		TYPE II - B
LEVEL OF ALTERATION		SECTION 504 ALTERATION—LEVEL 2 504.1 Scope. Level 2 alterations include the reconfiguration of space, the addition or elimination of any door or window, the reconfiguration or extension of any system, or the installation of any additional equipment.
OCCUPANCY CLASSIFICATION		ASSEMBLY - A-2

CODE CALCULATIONS

APPLICABLE CODES

GOVERNING CODES

A. FLORIDA BUILDING CODE 7TH EDITION (2020) BUILDING
B. FLORIDA BUILDING CODE 7TH EDITION (2020) ACCESSIBILITY
C. FLORIDA BUILDING CODE 7TH EDITION (2020) ENERGY CONSERVATION
D. FLORIDA BUILDING CODE 7TH EDITION (2020) EXISTING BUILDING
E. FLORIDA BUILDING CODE 7TH EDITION (2020) FUEL GAS
F. FLORIDA BUILDING CODE 7TH EDITION (2020) MECHANICAL
G. FLORIDA BUILDING CODE 7TH EDITION (2020) PLUMBING
H. FLORIDA BUILDING CODE 7TH EDITION (2020) RESIDENTIAL
I. FLORIDA BUILDING CODE 7TH EDITION (2020) TEST PROTOCOLS
J. FLORIDA FIRE PREVENTION CODE 7TH EDITION (2020) FFPC
K. 2020 NFPA 70 NATIONAL ELECTRIC CODE
L. NFPA 101 LIFE SAFETY CODE AND ADOPTED STANDARDS
M. NFPA 1

DRAWING INDEX

Sheet List - BREWERY

Sheet Seq	Sheet Number	Sheet Name
0. GENERAL CONDITIONS		
1	A-1.1	COVER SHEET - BREWERY
1. ARCHITECTURE		
1	A-1.2	PROPOSED & DEMO PLAN - BREWERY
1	A-1.10	STRUCTURAL DETAILS - BREWERY
3	A-1.4	LIFE SAFETY PLAN - BREWERY
4	A-1.5	REFLECTED CEILING NOTES & SPECIFICATIONS - BREWERY
5	A-1.6	REFLECTED CEILING - BREWERY
6	A-1.7	CONSTRUCTION DETAILS - BREWERY
7	A-1.8	CONSTRUCTION DETAILS - BREWERY
8	A-1.9	ADA SPEC CONSTRUCTION DETAILS - BREWERY
2. ELECTRICAL		
1	E-1.1	ELECTRICAL NOTES & SPECS - BREWERY
2	E-1.2	PROPOSED ELECTRICAL PLAN - BREWERY
4. PLUMBING		
1	P-1.1	PLUMBING NOTES & DETAILS - BREWERY
2	P-1.2	PLUMBING NOTES & SCHEDULES - BREWERY
3	P-1.3	PROPOSED PLUMBING PLAN - BREWERY
3	P-1.10	PROPOSED PLUMBING PLAN - FULL PLAN
4	P-1.4	PROPOSED PLUMBING ISO - BREWERY
Grand total: 16		

LOCATION MAP

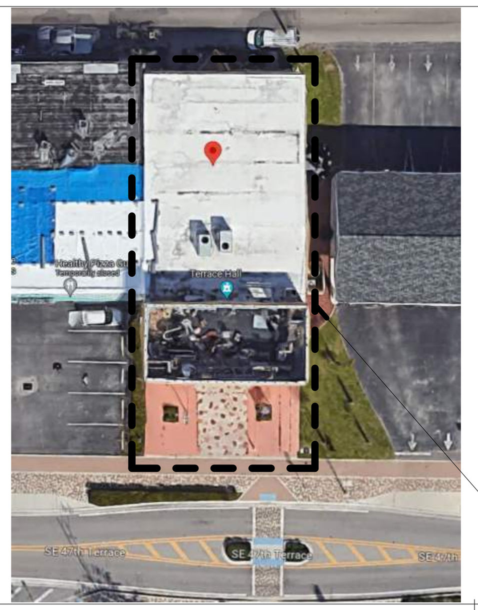

PROJECT LOCATION

SEAL

Sarasota ARCHITECTURE
Interior design inspections construction management
A K T M R Corporation company
1960 Stickney Point Road, Suite 201
Sarasota, Florida 34231 AR92053

(239) 443-6178 Cell
http://www.westcoastdrafting.com
West-Coast Drafting
- a drafting company - quality & accuracy -

REMODEL
1313 SE 47TH TER
CAPE CORAL FL 33904
STRAP: 07-45-24-C3-00360.0250
Folio ID: 10190045

BREWERY

SKYBAR AT 47TH LLC

TRUE
BUILDING

ISSUED FOR: *** CONCEPT ***

REVISIONS

MK	DESCRIPTION	DATE
No.	Description	Date

Project number: 23-2124.1
Project Issue Date: --
Project Status: CONCEPT

COVER SHEET - BREWERY

SHEET: 1 of 19

SHEET NUMBER
A-1.1
0. GENERAL CONDITIONS

NOTE: THESE PLANS ARE SCHEMATIC IN NATURE, IF A DISCREPANCY EXIST BETWEEN THE PLANS AND THE ACTUAL FIELD CONDITIONS, THE CONTRACTOR IS TO NOTIFY THE OWNER WITHIN 10 (TEN) DAYS. AFTER 10 DAYS, THE CONTRACTOR IS RESPONSIBLE FOR THE PROJECT IN ITS ENTIRETY.

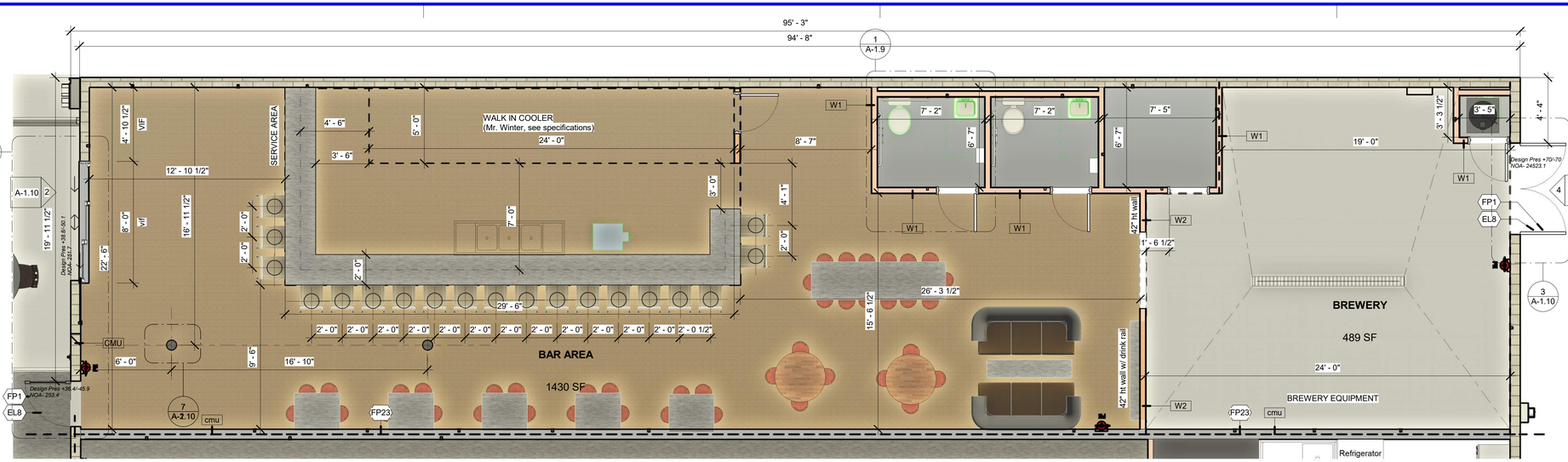

1 A-1.2 **PROPOSED FLOOR PLAN - BREWERY**
1/4" = 1'-0"

2 A-1.2 **DEMOLITION FLOOR PLAN - BREWERY**
1/4" = 1'-0"

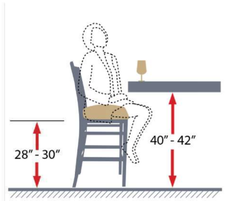

PLAN KEYNOTES

Key Value	Keynote Text
D2	DEMO EXISTING WALLS (TYPICAL)
D4	DEMO EXISTING DOOR
D7	DEMO EXISTING WALLS, PREP OPENING FOR NEW DOOR
D8	DEMO EXISTING PLUMBING FIXTURES, PERMANENTLY CAP OFF ALL REMAINING PIPES
D62	CONTRACTOR TO PROVIDE SHORING AND SUPPORT FOR EXISTING ALL EXISTING BUILDING ELEMENTS TO REMAIN DURING CONSTRUCTION (TYPICAL)
EL8	EXISTING DOOR
FP1	EXISTING EXTERIOR DOOR TO REMAIN
FP23	NEW FIRE RATED WALL (TENANT SEPARATION)
S2	EXISTING EXTERIOR SHELL
S20	OPENING REINFORCEMENTS (S21)

SEAL

Sarasota ARCHITECTURE
Interior design inspections construction management
A K T M R Corporation company
11960 Stickney Point Road, Suite 201
Sarasota, Florida 34231 AR92053

(239) 443-6178 Cell
http://www.westcoastdrafting.com
West-Coast Drafting
- a drafting company - quality & accuracy -

REMODEL
1313 SE 47TH TER
CAPE CORAL FL 33904
STRAP: 07-45-24-C3-00360.0250
Folio ID: 10190045

BREWERY

SKYBAR AT 47TH LLC
TRUE
BUILDING

ISSUED FOR: *** CONCEPT ***

REVISIONS:

MK	DESCRIPTION	DATE
No.	Description	Date

Project number: 23-2124.1
Project Issue Date: --
Project Status: CONCEPT

PROPOSED & DEMO PLAN - BREWERY

SHEET: 1 of 19

SHEET NUMBER
A-1.2

L ARCHITECTURE

NOTE: THESE PLANS ARE SCHEMATIC IN NATURE, IF A DISCREPANCY EXIST BETWEEN THE PLANS AND THE ACTUAL FIELD CONDITIONS, THE CONTRACTOR IS TO NOTIFY THE OWNER WITHIN 10 (TEN) DAYS. AFTER 10 DAYS, THE CONTRACTOR IS RESPONSIBLE FOR THE PROJECT IN ITS ENTIRETY.

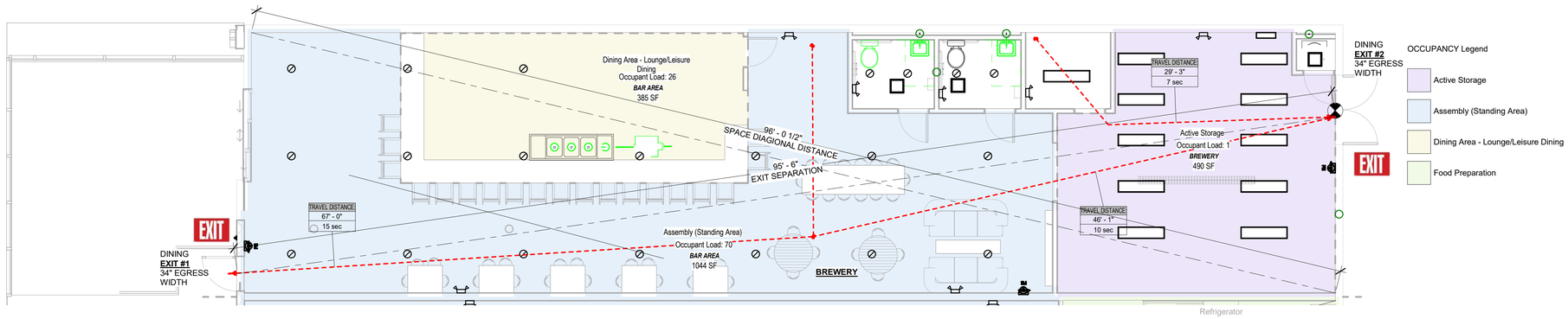

OCCUPANCY Legend

- Active Storage
- Assembly (Standing Area)
- Dining Area - Lounge/Leisure Dining
- Food Preparation

1 A-1.4 LIFE SAFETY PLAN - BREWERY
3/16" = 1'-0"

CLASS K EXTINGUISHER REQUIRED FOR KITCHEN AREA

5.7 Fire Extinguisher Size and Placement for Class K Fires.
5.7.1 Class K fire extinguishers shall be provided for hazards where there is a potential for fires involving combustible cooking media (vegetable or animal oils and fats).
5.7.2 Maximum travel distance shall not exceed 30 ft (9.15 m) from the hazard to the extinguishers.

Specifications

Size & Capacity (lbs.)	5
Application	Hose and Nozzle
Model Number	MP5
U/L Rating	2A:10B:C
Height	15 1/4 inches
Width	7 1/4 inches
Depth	4 1/4 Diameter inches
Range	12 -18 ft
Discharge Time	14 seconds
F.M. Approved	Yes

Fire Types

Class A Class B Class C

OCCUPANCY CALCULATIONS (BREWERY)			
- BUILDING USE GROUP		MIXED USE, NON SEPARATED	
BUILDING CONDITIONS			
LEASE AREA (GROUND COVER)		2,190	SQUARE FEET
NO EXIXTING MEZZANINE AT THIS LOCATION			
BUILDING USE GROUP = MIXED USE			
BUILDING IS NOT FULLY SPRINKLERED			
BUILDCONSTRUCTION CLASSIFICATION = II-B			
OCCUPANCY LOAD PER PROTOTYPICAL REQUIREMENTS			
2020 FLORIDA BUILDING CODE (TABLE 1004.5)			
ASSEMBLY AREA (BREWERY)	=	1,492	SF/30
(+/- 85% FOR DESIGN PURPOSES:	=	50	PEOPLE
IF LESS THAN 50 THAN BUSINESS (150 SQ FT/PPL)		**10**	**SF/150**
STORAGE/UTILITIES/SUPPORT AREA:	=	7	SF/300
(+/- 10% FOR DESIGN PURPOSES)	=	0	PEOPLE
OFFICE SUPPORT	=	48	SF/150
(+/-5% FOR DESIGN PURPOSES)	=	0	PEOPLE
KITCHEN AREA	=	493	SF/150
(+/-5% FOR DESIGN PURPOSES)	=	3	PEOPLE
TOTAL OCCUPANTS		14	PEOPLE
EGRESS WIDTH REQUIRED (PPL X .2)	=	5	INCHES OF EGRESS WIDTH REQUIRED
EXISTING DOOR #1 (ENTRY)	=	(34" W)	= 32" W CLEAR)
EXISTING DOOR #2 (SALES)		(72" W)	= 70" W CLEAR)
Total Width Provided			= 102" W
MAX LENGTH REQ'D EXIT ACCESS TRAVEL (W/OUT SPRINKLERS) = 200			
SALES FLOOR EXIT REQUIREMENTS ARE AS FOLLOWS (2020 BUILDING CODE 7TH ED)		14	People
		# OF REQ'D	
OCCUPANT LOAD RANGE FBC TABLE 1006.3.2		EXITS	NA
50 TO 500		2 EXITS ARE REQ'D FROM SALES FLOOR	
501 TO 1000		3 EXITS REQUIRED FROM SALES FLOOR	
GREATER 1000		4 EXITS REQUIRED FROM SALES FLOOR	
SEE LIFE SAFETY PLAN FOR ADDITIONAL INFORMATION			

Space Schedule Brewery

Name	OCCUPANT LOAD	Area per Person	Space Type
BAR AREA-1	26	15 SF	Dining Area - Lounge/Leisure Dining
BREWERY	5	100 SF	Food Preparation
UTIL	0	359 SF	Inactive Storage
W TOILET	0	100 SF	Restrooms
M TOILET	0	100 SF	Restrooms
OFFICE	0	150 SF	Office - Enclosed (BUSINESS)
BAR AREA-2	70	15 SF	Assembly (Standing Area)
Grand total: 7	101		

SEAL

Sarasota ARCHITECTURE
Interior design inspections construction management
A K T M R Corporation company
11960 Stickney Point Road, Suite 201
Sarasota, Florida 34231 AR92053

(239) 443-6178 Cell
http://www.westcoastdrafting.com
West-Coast Drafting
- a drafting company - quality & accuracy -

REMODEL
1313 SE 47TH TER
CAPE CORAL FL 33904
STRAP: 07-45-24-C3-00360.0250
Folio ID: 10190045

BREWERY

SKYBAR AT 47TH LLC
TRUE
BUILDING

ISSUED FOR: *** CONCEPT ***

REVISIONS

MK	DESCRIPTION	DATE
No.	Description	Date

Project number: 23-2124.1
Project Issue Date: --
Project Status: CONCEPT

LIFE SAFETY PLAN - BREWERY

SHEET: 3 of 19

SHEET NUMBER
A-1.4
L ARCHITECTURE

NOTE: THESE PLANS ARE SCHEMATIC IN NATURE, IF A DISCREPANCY EXIST BETWEEN THE PLANS AND THE ACTUAL FIELD CONDITIONS, THE CONTRACTOR IS TO NOTIFY THE OWNER WITHIN 10 (TEN) DAYS. AFTER 10 DAYS, THE CONTRACTOR IS RESPONSIBLE FOR THE PROJECT IN ITS ENTIRETY.

1/10/2024 10:25:54 AM

GENERAL SHEET NOTES

1. DO NOT SCALE DRAWINGS.
2. ARCHITECTURAL DIMENSIONS SHALL ESTABLISH LIGHTING AND MECHANICAL FIXTURE LOCATIONS.
3. SEE MECHANICAL AND ELECTRICAL DRAWINGS TO COORDINATE HVAC REGISTER AND LIGHTING EQUIPMENT.
4. SEE STRUCTURAL DRAWINGS TO COORDINATE FLOOR PENETRATIONS AND RELATED INFORMATION.
5. SEE LIGHTING PLANS FOR ELECTRICAL ELEMENTS IN CEILING.

REFLECTED CEILING PLAN KEYNOTES

1. 2'X2' CEILING GRID IS PARTIALLY EXISTING, REPAIR AND REPLACE AS NECESSARY
2. X
3. X
4. X
5. X

RCP SYMBOLS LEGEND

- RETURN AIR DIFFUSER (24x24)
- RETURN AIR DIFFUSER (24x48)
- SUPPLY AIR (12x12)
- SUPPLY AIR (24x24)
- EXHAUST FAN (12x12)
- EXHAUST FAN (24x24)
- SIDE WALL SUPPLY AIR DIFFUSER
- RECESSED CAN
- RECESSED PIN LIGHT
- RECESSED DIRECTIONAL LIGHT
- LAY-IN FLUORESCENT PARABOLIC (24x24)
- LAY-IN FLUORESCENT (24x24)
- LAY-IN FLUORESCENT PARABOLIC (24x48)
- LAY-IN FLUORESCENT (24x48)
- BATTERY BACK-UP EMERGENCY LIGHT
- WALL MOUNTED EMERGENCY EXIT LIGHT
- CEILING MOUNTED EMERGENCY EXIT LIGHT
- FEATURE PENDANT LIGHT
- FEATURE PENDANT LIGHT
- SURFACE MOUNTED FLUORESCENT LIGHT (24")
- SURFACE MOUNTED FLUORESCENT LIGHT (48")
- SURFACE MOUNTED LIGHT
- RECESSED SPEAKER
- WALL MOUNTED SPEAKER
- WALL SCONCE
- WALL SCONCE
- WALL SCONCE
- CEILING FAN
- CEILING FAN W/ LIGHT KIT
- FIRE SPRINKLER HEAD
- TRACK LIGHTING

REFLECTED CEILING PLAN NOTES

1. ALL GRIDS SHALL BE CENTERED ON THE ROOM UNLESS OTHERWISE SPECIFIED
2. HANGERS NEED TO BE INSTALLED ABOVE THE MAIN BEAMS TYPICALLY EVERY FOUR FEET.
3. SNAP A CHALK LINE FOR EACH OF THE MAIN BEAMS. ATTACH HANGERS AND WIRES TO THE DECK ABOVE THE FIRST ROW OF MAIN BEAMS AT FOUR-FOOT INTERVALS.
4. STRETCH A GUIDE STRING FROM ONE END OF THE ROOM TO THE OTHER, BELOW WITH MOLDING WHERE THE FIRST MAIN BEAM WILL HANG.
5. STRETCH A LEVELING STRING FROM ONE SIDE TO THE OTHER 7/8" ABOVE THE BOTTOM OF THE WALL MOLDING.
6. BEND THE WIRES AT THE HEIGHT OF THE STRING SO THAT THE MAIN BEAM IS HELD AT THE CORRECT HEIGHT.
7. WRAP HANGER WIRE SECURELY AROUND ITSELF THREE TIMES.
8. ALL LIGHT FIXTURES SHALL BE INDEPENDENTLY SUPPORTED WITH WIRES PLACED DIAGONALLY FROM EACH CORNER OF THE LIGHT FIXTURE.
9. VERIFY AND INSTALL ALL LIGHTING AND CEILING MATERIALS AS PER MANUFACTURES SPECIFICATIONS.
10. EMERGENCY (EM) LUMINARIES SHALL BE CIRCUITED WITH AN "UNSWITCHED HOT" TO PROVIDE CONTINUOUS POWER TO BATTERY PACK EVEN WHEN LUMINAIRE IS OFF.
11. ALL NIGHT-LIGHT (NL) LUMINARIES SHALL BE CIRCUITED AHEAD OF ANY SWITCHING
12. IT SHALL BE THE G.C.'S RESPONSIBILITY TO UNLOAD INVENTORY AND STORE LIGHTING PACKAGE. THE G.C. SHALL ALSO SHIP ANY EXCESS MATERIALS BACK TO THE ELECTRICAL PACKAGE DISTRIBUTOR.
13. EXIT LIGHTS AT SHALL BE CEILING MOUNTED AND CENTERED OVER OPENINGS. IF PLAN LOCATIONS ARE NOT ACCEPTABLE, IMMEDIATELY CONTACT MY SALON SUITE PROJECT MANAGER FOR DIRECTION.
14. WHERE DRYWALL CEILINGS ARE USED, G.C. SHALL ARRANGE CIRCUITS TO AVOID THE USE OF JUNCTION BOXES IN INACCESSIBLE LOCATIONS. THE USE OF JUNCTION BOXES ABOVE DRYWALL CEILINGS SHALL BE LIMITED TO LOCATIONS NEAR ACCESS FRAMES USED FOR DIFFUSERS AND RETURN AIR GRILLES OR ACCESS PANELS LOCATED ON PLANS. IF PLAN LOCATION IS NOT ACCEPTABLE, IMMEDIATELY CONTACT MY SALON SUITE PROJECT MANAGER FOR DIRECTION.
15. SWITCH INDIVIDUAL ROOM LIGHT FIXTURES SEPARATELY & OPEN AREAS TOGETHER, SEE ELECTRICAL DRAWINGS
16. FOR CEILING SPECIFICATIONS, SEE RCP
17. FOR NIGHT LIGHTING, SEE ELECTRICAL DRAWINGS.
18. FOR HVAC SUPPLY / RETURN GRILLES & EXHAUST FANS, SEE MECHANICAL DRAWINGS
19. ADEQUATE ACCESS PANELS OR DOORS SHALL BE INCORPORATED INTO TENANT WORK FOR INSPECTION SERVICE AND REPLACEMENT OF BOTH, LANDLORD AND TENANT EQUIPMENT. COORDINATE PLACEMENT WITH LANDLORD'S ON-SITE REPRESENTATIVE.

SEAL

Sarasota ARCHITECTURE
Interior design inspections construction management
A K T M R Corporation company
11960 Stickney Point Road, Suite 201
Sarasota, Florida 34231 AR92053

(239) 443-6178 Cell
http://www.westcoastdrafting.com
West-Coast Drafting
- a drafting company - quality & accuracy -

REMODEL
1313 SE 47TH TER
CAPE CORAL FL 33904
STRAP: 07-45-24-C3-00360.0250
Folio ID: 10190045

BREWERY

SKYBAR AT 47TH LLC

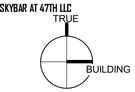

ISSUED FOR: *** CONCEPT ***

REVISIONS

MK.	DESCRIPTION	DATE
No.	Description	Date

Project number: 23-2124.1
Project Issue Date: --
Project Status: CONCEPT

REFLECTED CEILING NOTES & SPECIFICATIONS - BREWERY

SHEET: 4 of 19

SHEET NUMBER
A-1.5
L ARCHITECTURE

M:\Dropbox\projects\23-2124 - 1313 SE 47th Ter - Reno\CAD FILES\A1 ITERR.dwt

NOTE: THESE PLANS ARE SCHEMATIC IN NATURE, IF A DISCREPANCY EXIST BETWEEN THE PLANS AND THE ACTUAL FIELD CONDITIONS, THE CONTRACTOR IS TO NOTIFY THE OWNER WITHIN 10 (TEN) DAYS. AFTER 10 DAYS, THE CONTRACTOR IS RESPONSIBLE FOR THE PROJECT IN ITS ENTIRETY.

PLAN KEYNOTES

Key Value	Keynote Text

LIGHT FIXTURE SCHEDULE BREWERY

Mark	Count	MFR.	LAMP	MOUNTING	Type	Apparent Load	Image	2D LEGEND
L1	21	BY OWNER	LED	SURFACE	8" LED- 120V	150 VA		
L2	11	Lithonia Lighting White LED Panel Light	LED	SURFACE	1'x4'(1 Lamp) - 120V	75 VA		
L5	1	Tech Lighting	LED		700OWCHA93026BUD UNVS	12 VA		

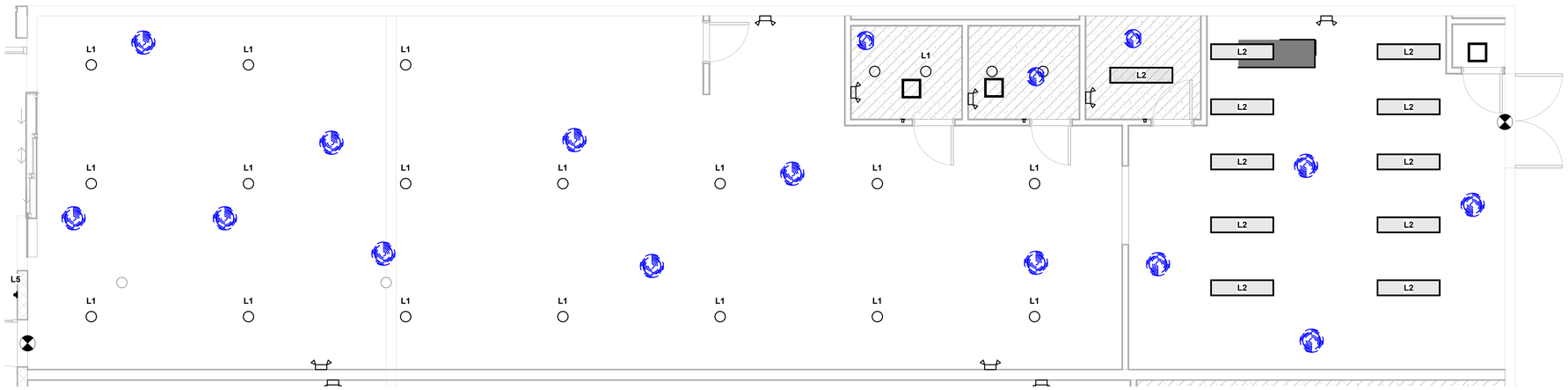

1 A-1.6 **PROPOSED REFLECTED CEILING PLAN - BREWERY**
1/4" = 1'-0"

SEAL

Sarasota ARCHITECTURE
Interior design inspections construction management
A K T M R Corporation company
1960 Stickney Point Road, Suite 201
Sarasota, Florida 34231 AR92053

(239) 443-6178 Cell
http://www.westcoastdrafting.com
West-Coast Drafting
- a drafting company - quality & accuracy -

REMODEL
1313 SE 47TH TER
CAPE CORAL FL 33904
STRAP: 07-45-24-C3-00360.0250
Folio ID: 10190045

BREWERY

SKYBAR AT 47TH LLC
TRUE
BUILDING

ISSUED FOR: *** CONCEPT ***

REVISIONS:

MK	DESCRIPTION	DATE
No.	Description	Date

Project number: 23-2124.1
Project Issue Date: --
Project Status: CONCEPT

REFLECTED CEILING - BREWERY

SHEET: 5 of 19

SHEET NUMBER
A-1.6

L ARCHITECTURE

NOTE: THESE PLANS ARE SCHEMATIC IN NATURE, IF A DISCREPANCY EXIST BETWEEN THE PLANS AND THE ACTUAL FIELD CONDITIONS, THE CONTRACTOR IS TO NOTIFY THE OWNER WITHIN 10 (TEN) DAYS. AFTER 10 DAYS, THE CONTRACTOR IS RESPONSIBLE FOR THE PROJECT IN ITS ENTIRETY.

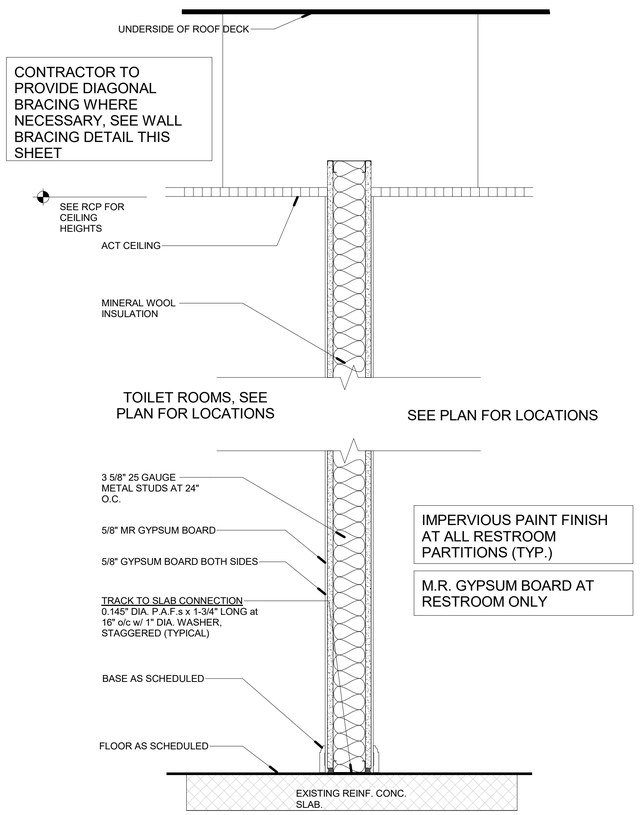

5 A-1.7 **TYP INTERIOR WALL TYPE #W1 Copy 1**
1 1/2" = 1'-0"

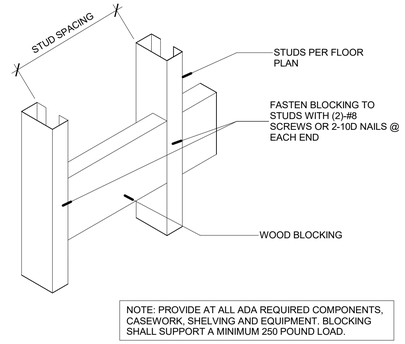

13 A-1.7 **Wall Backing Detail1 Copy 1**
1/4" = 1'-0"

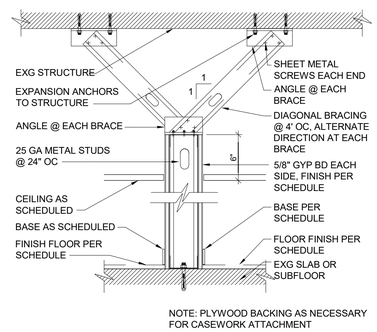

2 A-1.7 **WALL BRACING1 Copy 1**
12" = 1'-0"

STUD SPACING

3 5/8" METAL STUD SPECIFICATION		
GAUGE	SPACING	HEIGHT @ L/240
25	24" O.C.	13'-5"
25	16" O.C.	14'-4"
20	24" O.C.	14'-9"
20	16" O.C.	16'-5"
6" METAL STUD SPECIFICATION		
GAUGE	SPACING	HEIGHT @ L/240
25	24" O.C.	16'-9"
25	16" O.C.	19'-9"
20	24" O.C.	21'-7"
20	16" O.C.	24'-6"

PARTITION GENERAL NOTES

1. SEE ELEVATIONS AND FINISH SCHEDULE FOR APPLIED FINISHES SUCH AS CERAMIC TILE, FABRIC WALL COVERINGS, PANELING, ETC
2. STANDARD STUD SIZE SHALL BE 3 5/8" 20 GA SSMA DES 362 S 137-33 U.N.O.
3. WHERE MANUFACTURER'S HEIGHT LIMITATIONS ARE EXCEEDED DUE TO FIELD CONDITIONS, USE HEAVIER GAUGE STUDS IN ACCORDANCE W/ MANUFACTURER'S RECOMMENDATIONS
4. ALL INTERIOR PARTITION INSULATION TO BE MINERAL FIBRIOUS SOUND ABSORBING INSULATION U.N.O.

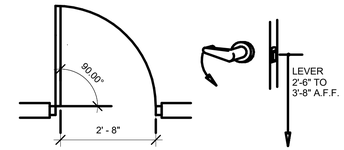

6 DOOR_LEVER1 Copy 1
1/2" = 1'-0"

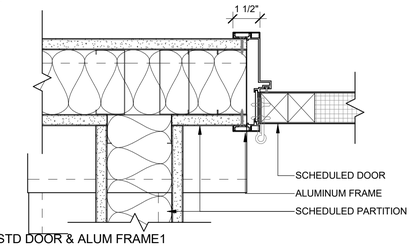

8 JAMB @ STD DOOR & ALUM FRAME1 Copy 1
3" = 1'-0"

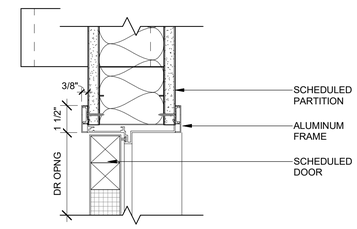

7 HEAD @ STANDARD DOOR1 Copy 1
3" = 1'-0"

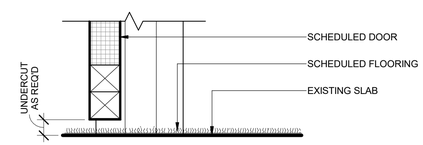

4 SILL @ STANDARD DOOR1 Copy 1
3" = 1'-0"

DOOR LEGEND

DOORS: 1 3/4" THK UNO

REFER TO MECH DRAWINGS FOR REQUIRED FREE AREA OF LOUVER OR UNDERCUT

NOTE
DOOR TYPE NUMBERS, FRAME TYPES, AND HARDWARE NUMBERS MAY NOT BE CONSECUTIVE

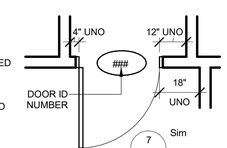

DOOR NOTES:
1. FBC 107.2.1, & 1008.1.9, ALL LATCH/LOCKETS SHALL BE ADA COMPLIANT LEVER TYPE UNITS.
2. ALL HARDWARE AND DOORS SHALL MEET THE STRICTEST REQUIREMENTS OF NFPA 101 (CURRENT EDITION) AND THE CURRENT EDITION OF FLORIDA BUILDING CODE CHAPTER 11.
3. THE CONTRACTOR SHALL PROVIDE HARDWARE FROM THE FOLLOWING MANUFACTURES; HINGES "HAGER," "RIXSON" LOCK/LATCHSETS "SCHLAGE," CLOSERS "YALE."
4. VERIFY LOCKING/HARDWARE REQUIREMENTS WITH TENANT BEFORE BIDDING
5. GC. TO SUBMIT SHOP DRAWINGS TO ARCHITECT FOR REVIEW.

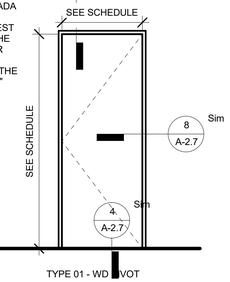

3 DOOR TYPES & LEGEND1 Copy 1
3/8" = 1'-0"

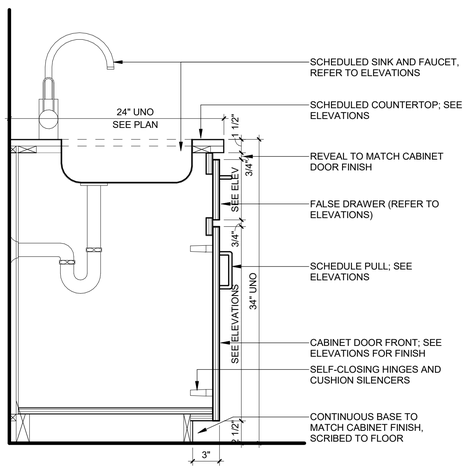

9 BASE CABINET W/ SINK AND BACKSPLASH Copy 1
1 1/2" = 1'-0"

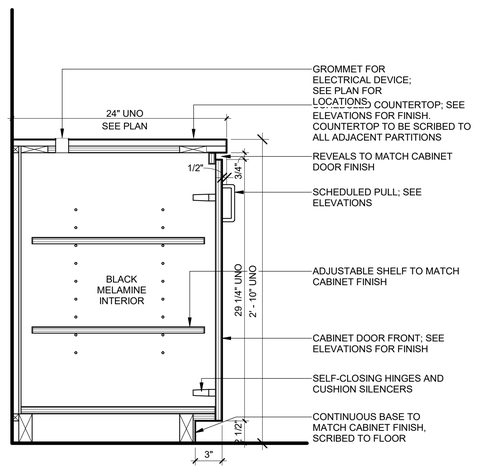

10 BASE CABINET W/ ADJUSTABLE SHEVING
1 1/2" = 1'-0"

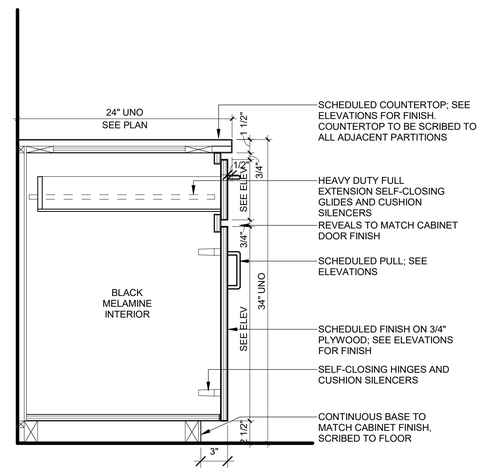

11 BASE CABINET W/ ADJUSTABLE SHELF & DRAWER
1 1/2" = 1'-0"

SEAL

Sarasota ARCHITECTURE
Interior design inspections construction management
AKTMR Corporation company
11960 Stickney Point Road, Suite 201
Sarasota, Florida 34231 AR92053

(239) 443-6178 Cell
http://www.westcoastdrafting.com
West-Coast Drafting
- a drafting company - quality & accuracy -

REMODEL
1313 SE 47TH TER
CAPE CORAL FL 33904
STRAP: 07-45-24-C3-00360.0250
Folio ID: 10190045

BREWERY

SKYBAR AT 47TH LLC
TRUE BUILDING

ISSUED FOR: *** CONCEPT ***

REVISIONS

MK.	DESCRIPTION	DATE
No.	Description	Date

Project number: 23-2124.1
Project Issue Date: --
Project Status: CONCEPT

CONSTRUCTION DETAILS - BREWERY

SHEET: 6 of 19

SHEET NUMBER
A-1.7

L ARCHITECTURE

NOTE: THESE PLANS ARE SCHEMATIC IN NATURE, IF A DISCREPANCY EXIST BETWEEN THE PLANS AND THE ACTUAL FIELD CONDITIONS, THE CONTRACTOR IS TO NOTIFY THE OWNER WITHIN 10 (TEN) DAYS. AFTER 10 DAYS, THE CONTRACTOR IS RESPONSIBLE FOR THE PROJECT IN ITS ENTIRETY.

1/10/2024 10:20:55 AM
M:\Dropbox\projects\23-2124 - 1313 SE 47th Ter - Aero\CAD FILES\A1.7 TYPR.rvt

1/10/2024 11:20:55 AM

SIGNAGE GUIDELINES:

1. ALL GUEST ROOMS, MEETING ROOMS, TOILET ROOMS, AND OTHER COMMON AREA ROOMS SHOULD PROVIDE SIGNAGE IN COMPLIANCE WITH GUIDELINES 3,4,5,6 AND 7 BELOW.

2. DIRECTIONAL SIGNAGE - MUST BE LOCATED AT AN INACCESSIBLE ELEMENT WHICH DIRECTS INDIVIDUALS WITH DISABILITIES TO THE NEAREST ACCESSIBLE ELEMENT.

3. CHARACTER PROPORTION - LETTERS AND NUMBERS ON SIGNS SHALL HAVE A WIDTH TO HEIGHT RATIO BETWEEN 1:5 AND 1:10.

4. CHARACTER HEIGHT - CHARACTERS AND NUMBERS ON SIGNS SHALL BE SIZED ACCORDING TO THE VIEWING DISTANCE FROM WHICH THEY ARE TO BE READ. THE MINIMUM CHARACTER HEIGHT SHOULD BE THREE INCHES.

5. RAISED AND BRAILLE CHARACTERS AND PICTORIAL SYMBOL SIGNS (PICTOGRAMS) - LETTERS AND NUMERALS SHALL BE RAISED 1/32", UPPER CASE, SANS SERIF OR SIMPLE SRIF TYPE AND SHALL BE ACCOMPANIED WITH GRADE 2 BRAILLE. RAISED CHARACTERS SHALL BE AT LEAST 5/8" HIGH, BUT NO HIGHER THAN TWO INCHES. PICTOGRAMS SHALL BE ACCOMPANIED BY THE EQUIVALENT VERBAL DESCRIPTION PLACED DIRECTLY BELOW THE PICTOGRAMS. THE BORDER DIMENSION OF THE PICTOGRAM SHALL BE SIX INCHES MINIMUM IN HEIGHT.

6. FINISH AND CONTRAST - THE CHARACTERS AND BACKGROUND OF SIGNS SHALL BE EGGSHELL, MATTE OR OTHER NO GLARE FINISH. CHARACTERS AND SYMBOLS SHALL CONTRAST WITH THEIR BACKGROUND - EITHER LIGHT CHARACTERS O A DARK BACKGROUND OR DARK CHARACTERS ON A LIGHT BACKGROUND.

7. MOUNTING LOCATION AND HEIGHT - WHERE PERMANENT IDENTIFICATION IS PROVIDED FOR ROOMS AND SPACES, SIGNS SHALL BE INSTALLED ON THE WALL ADJACENT TO THE LATCH SIDE OF THE DOOR. WHERE THERE IS NO WALL SPACE TO THE LATCH SIDE OF THE DOOR, INCLUDING AT DOUBLE LEAF DOORS, SIGNS SHALL BE PLACED ON THE NEAREST ADJACENT WALL. MOUNTING HEIGHT SHALL BE 60" ABOVE THE FINISHED FLOOR TO THE CENTERLINE OF THE SIGN. MOUNTING LOCATION FOR SUCH SIGNAGE SHALL BE SO THAT A PERSON MAY APPROACH WITHIN THREE INCHES OF SIGNAGE WITHOUT ENCOUNTERING PROTRUDING OBJECTS OR STANDING WITHIN THE SWING OF THE DOOR.

8. FLORIDA PARKING - TO PROVIDE ACCESSIBLE SIGNAGE AT FLORIDA PARKING SPACES, PLEASE REFER TO THE FLORIDA ACCESSIBLE PARKING SPACES REQUIREMENTS.

1 FLORIDA ACCESSIBILITY CODE
SCALE: 3/4" = 1'-0"

1. Grab bars at side of accessible water closets shall be 42" long and shall begin 12" away from wall of water closet.
2. Grab bars behind accessible water closets shall be 36" long and shall be located centered on water closet.
3. Grab bars shall be 33" to 36" above floor, 1-1/4" to 1-1/2" O.D. and shall be 1-1/2" away from wall surface.
4. Grab bars shall be designed and secured to support the weight of 250 pounds. Grab bars may be one-piece, "L" shaped type.
5. Accessible lavatories shall be mounted so that rim of the lavatory (or the top counter surface in the case of a vanity counter) is no higher than 34" above floor surface. Provide bottom clearance of at least 29" from floor surface to underside of a lavatory or a vanity apron.
6. Exposed hot water and drain piping below lavatories shall be insulated or otherwise covered in order to prevent a person's legs from being burned.
7. Faucets shall be lever type or push type only.
8. Mirrors above lavatories shall be mounted with their bottom edge no higher than 40" above the floor surface.
9. Accessible water closets shall have seats which are 17" to 19" above the floor surface.
10. Controls for flush valves shall be mounted on the wide side of toilet areas no more than 44" above the floor.
11. Accessible urinals shall be stall-type or wall hung with an elongated rim at a maximum height of 17" above floor surface.

2 ADA TOILET ACCESSIBILTY NOTES

1. THE FOLLOWING APPLIES TO ALL CABINET ITEMS THROUGHOUT THE SET OF PLANS UNLESS OTHERWISE NOTED.

2. THE MILLWORK CONTRACTOR, BEFORE STARTING ANY WORK SHALL VERIFY ALL DIMENSIONS AND LEVELS GIVEN FOR WORK UNDER THIS CONTRACT IN CONJUNCTION WITH ARCHITECT'S OR INTERIOR DESIGNER'S DRAWINGS AND DETAILS. ALL MILLWORK SHALL BE SCRIBED TO FIT FIELD CONDITIONS.

3. THE MILLWORK CONTRACTOR SHALL SUBMIT TO CLIENT AND ARCHITECT SHOP DRAWINGS FOR APPROVAL AND WITH SUCH PROMPTNESS AS TO CAUSE NO DELAY IN HIS OWN WORK OR THAT OF ANY OTHER CONTRACTOR OR SUBCONTRACTOR. PRINTS SHALE BE KEPT BY CLIENT.

4. ALL MILLWORK SHALL BE CONSTRUCTED IN ACCORDANCE WITH "PREMIUM GRADE STANDARDS AS ESTABLISHED BY THE "ARCHITECTURAL WOODWORK INSTITUTE".

5. THE MILLWORK CONTRACTOR SHALL COMPLY WITH ALL JOB SITE BUILDING CODES AND REGULATIONS.

6. THE MILLWORK CONTRACTOR SHALL COORDINATE WITH GENERAL AND ELECTRICAL CONTRACTORS AND WITH LOCAL TELEPHONE REPRESENTATIVES WHERE APPLICABLE.

7. VERTICAL BLOCKING NOTE: THE MILLWORK CONTRACTOR SHALL FIELD VERIFY THAT ALL VERTICAL WOOD BLOCKING HAS BEEN PROVIDED (JACK STUDS) BETWEEN EACH STUD AT ALL WALL HUNG CABINETS, SHELVES, ETC.

8. ALL MATERIALS PROVIDED BY THE MILLWORK CONTRACTOR SHALL BE FREE OF CHIPPING, DISTRESS, WARPING, CRACKING, FLAKING, SPLITTING AND/OR MARKING THAT WOULD RESULT IN ANY UNEVEN OR DAMAGED SURFACE.

9. ALL PLASTIC LAMINATE COUNTERS SHALL HAVE FINISHED EDGES UNLESS OTHERWISE NOTED. ALL COUNTER AREAS SHALL BE ANCHORED TO CONTINUOUS WOOD OR STEEL CLEATS.

10. ALL CABINET DOORS SHALL HAVE PLASTIC LAMINATE APPLIED TO FACE AND SHALL HAVE LAMINATE BACKING SHEET APPLIED AS RECOMMENDED BY THE LAMINATE MANUFACTURER. ALL DRAWER SLIDES SHALL BE ACCURIDE FULL EXTENSION BALL BEARING OR EQUAL.

11. THE MILLWORK CONTRACTOR SHALL FURNISH AND INSTALL ALL CABINETWORK INCLUDING SHELF STANDARDS, PULLS HINGES, LOCKS AND ANY OTHER HARDWARE REQUIRED TO COMPLETE THE PROJECT. IN ADDITION TO WHAT IS SPECIFIED HEREIN THE MILLWORK CONTRACTOR SHALL FURNISH AND INSTALL GROMMETS AS REQUIRED.

3 MILLWORK SPECIFICATIONS
SCALE: 3/4" = 1'-0"

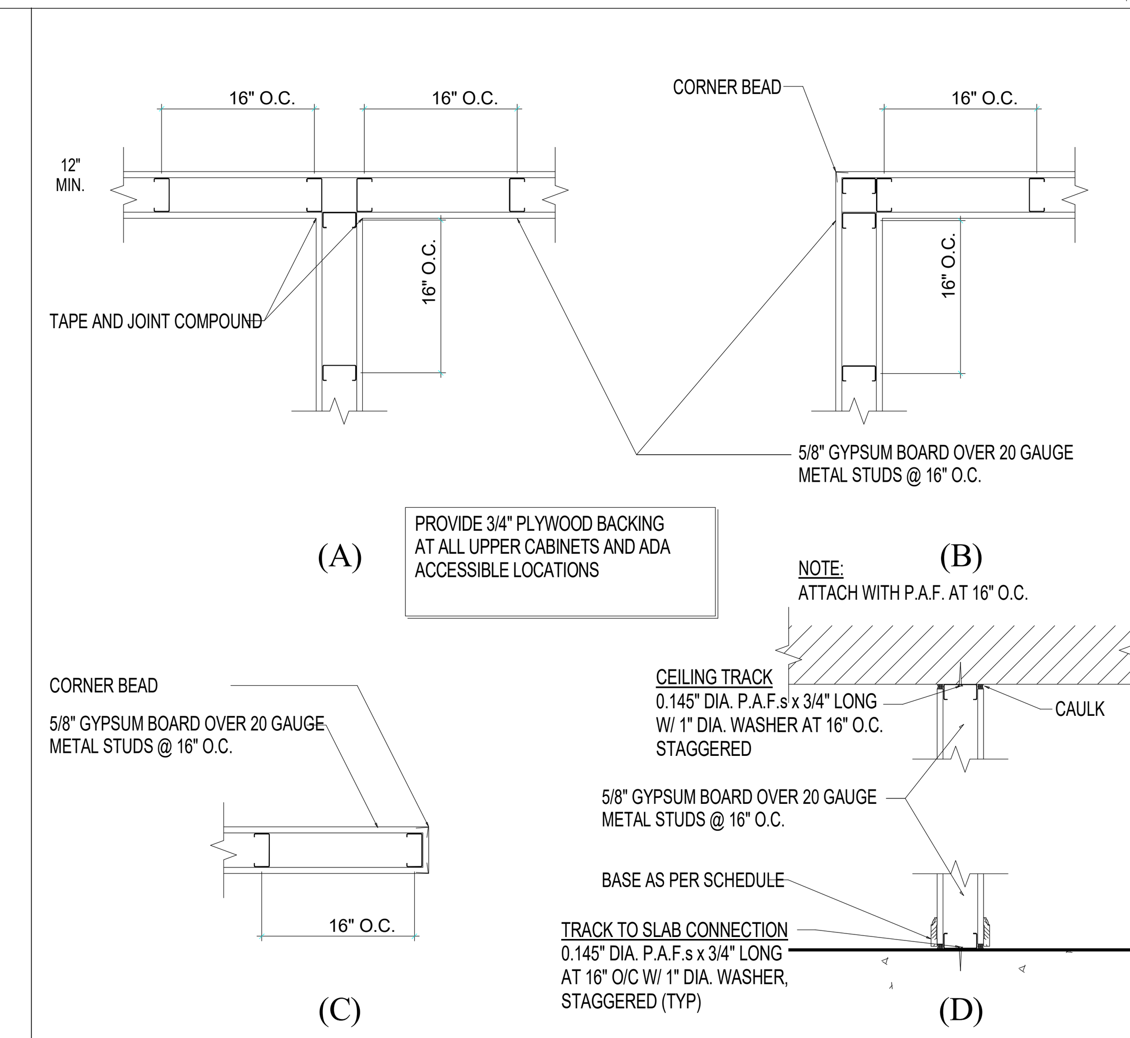

4 TYPICAL FRAMING DETAILS
SCALE: 3/4" = 1'-0"

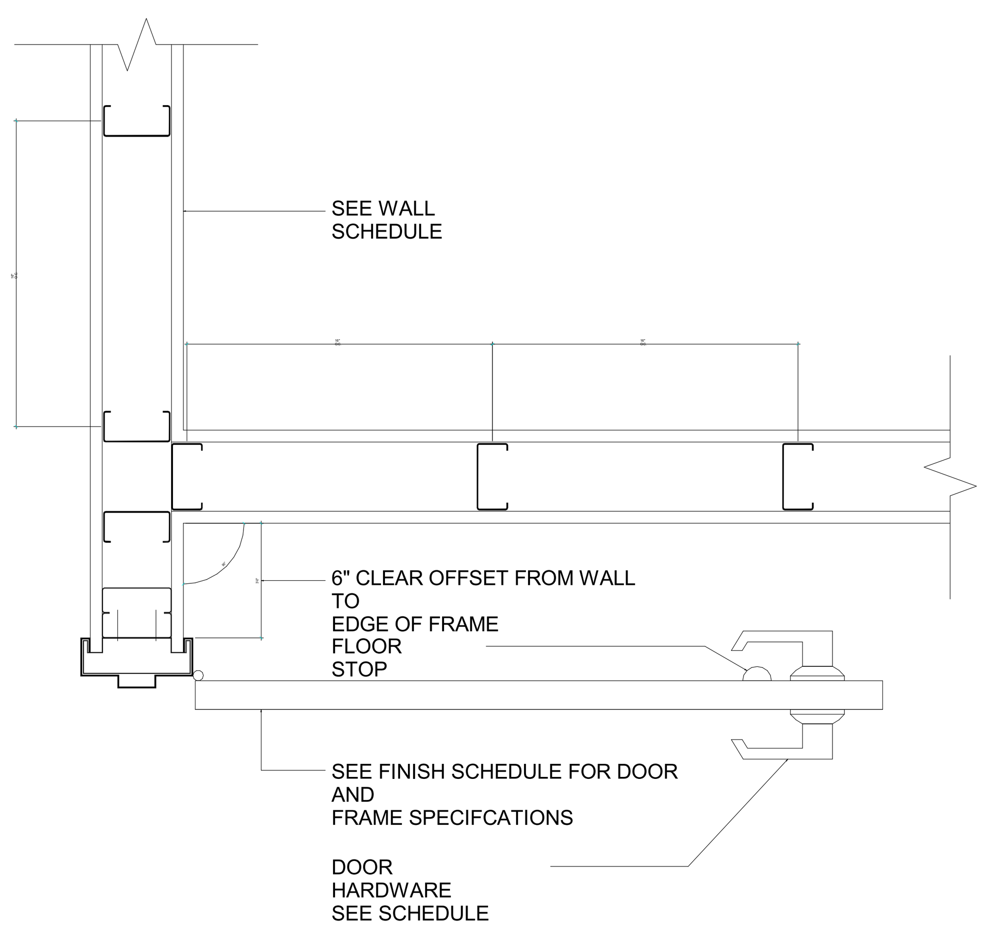

5 TYPICAL DOOR OFFSET DETAIL
SCALE 1-1/2" = 1'-0"

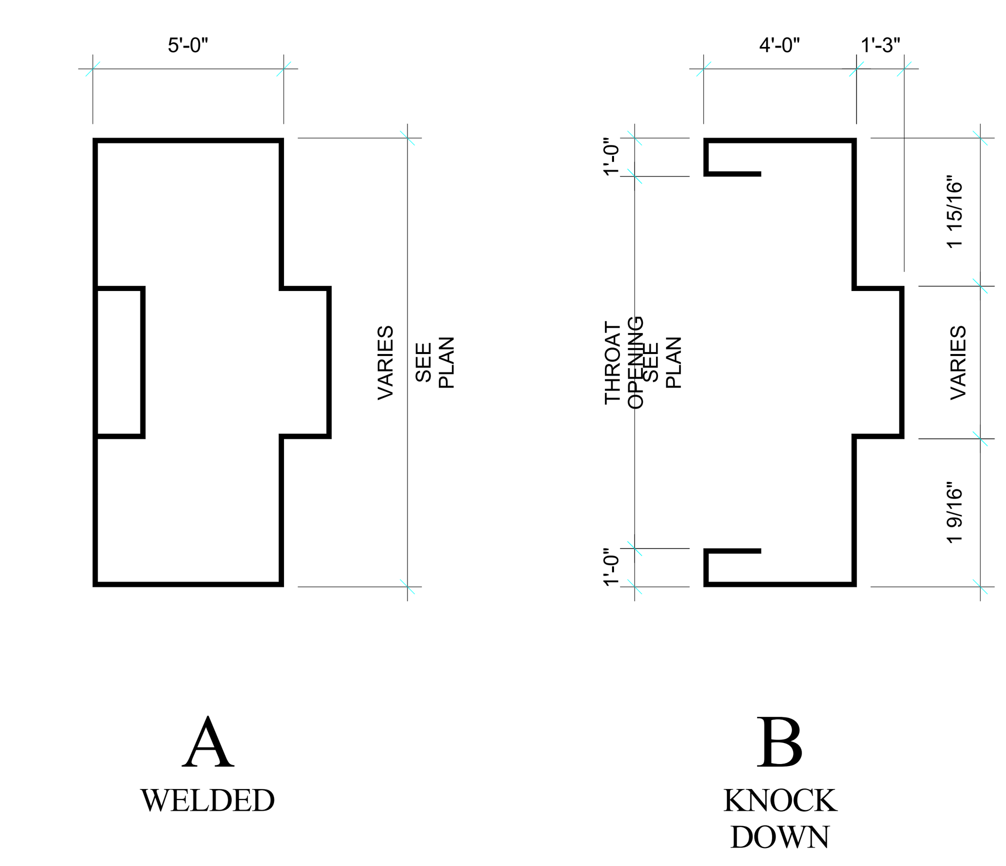

6 TYPICAL FRAME PROFILES
SCALE: 6" = 1'-0"

MOUNTING LOCATION AND HEIGHT - WHERE PERMANENT IDENTIFICATION IS PROVIDED FOR ROOMS AND SPACES, SIGNS SHALL BE INSTALLED ON THE WALL ADJACENT TO THE LATCH SIDE OF THE DOOR. WHERE THERE IS O WALL SPACE TO THE LATCH SIDE OF THE DOOR, INCLUDING AT DOUBLE LEAF DOORS, SIGNS SHALL BE PLACED ON THE NEAREST ADJACENT WALL. MOUNTING HEIGHT SHALL BE 60" ABOVE THE FINISHED FLOOR TO THE CENTERLINE OF THE SIGN. MOUNTING LOCATION FOR SUCH SIGNAGE SHALL BE SO THAT A PERSON MAY APPROACH WITHIN THREE INCHES OF SIGNAGE WITHOUT ENCOUNTERING PROTRUDING OBJECTS OR STANDING WITHIN THE SWING OF THE DOOR.

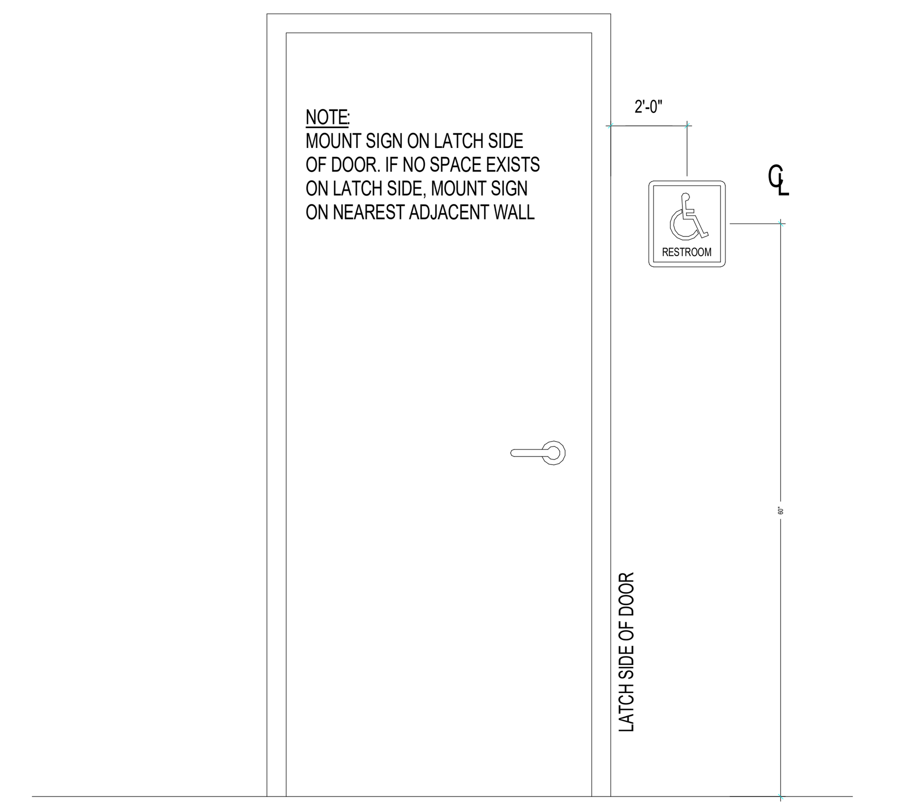

7 ADA SIGNAGE DETAIL
SCALE: 3/4" = 1'-0"

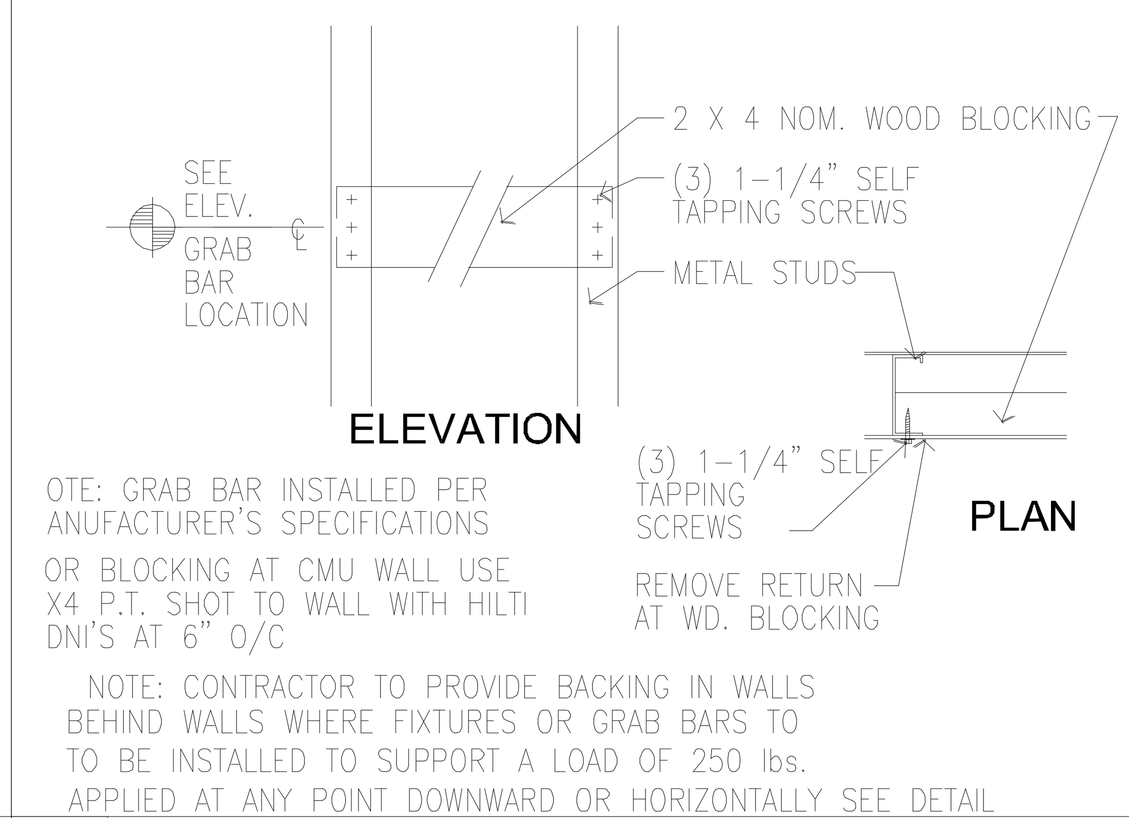

8 GRAB BAR/ACCESSORIES PARTITION BACKING
SCALE N.T.S.

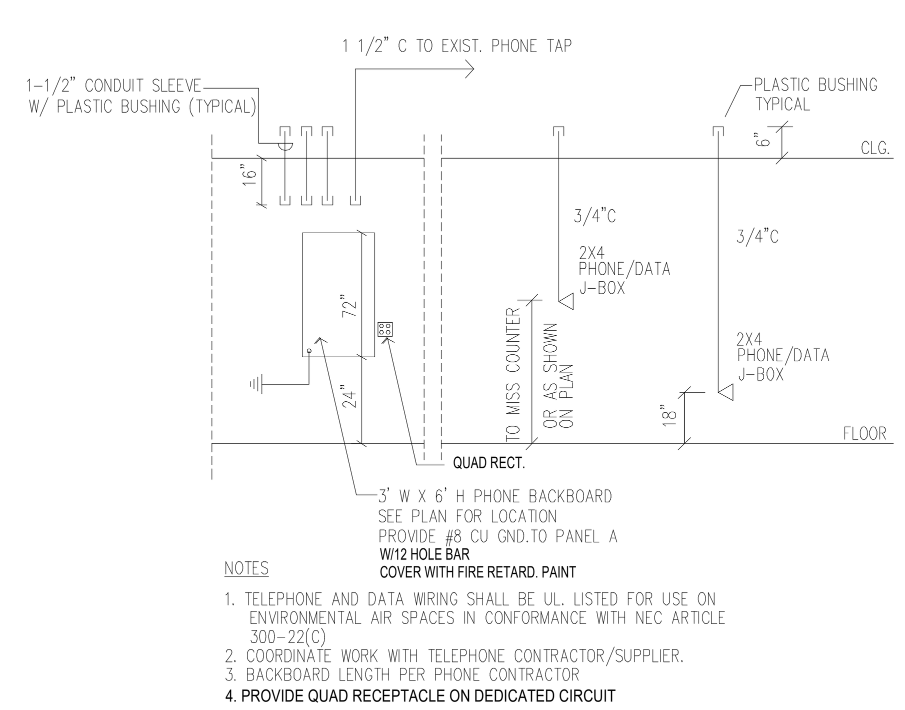

9 TELEPHONE/DATA RISER
SCALE: N.T.S.

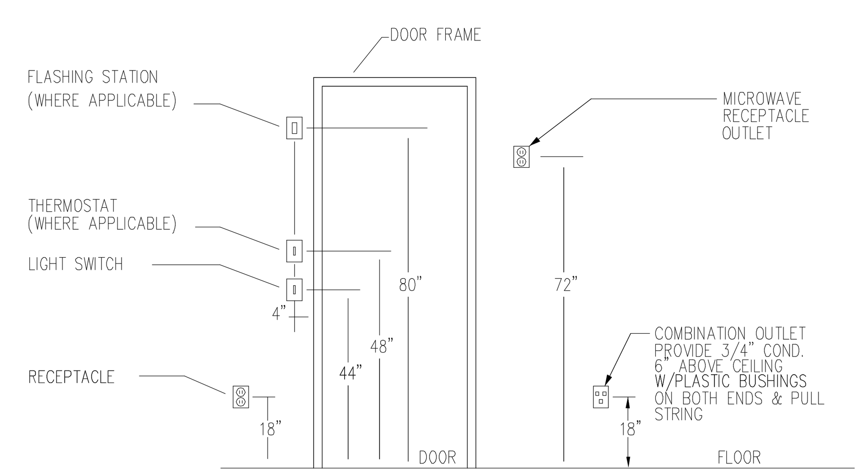

10 DEVICE INSTALLATION DETAIL
SCALE: N.T.S.

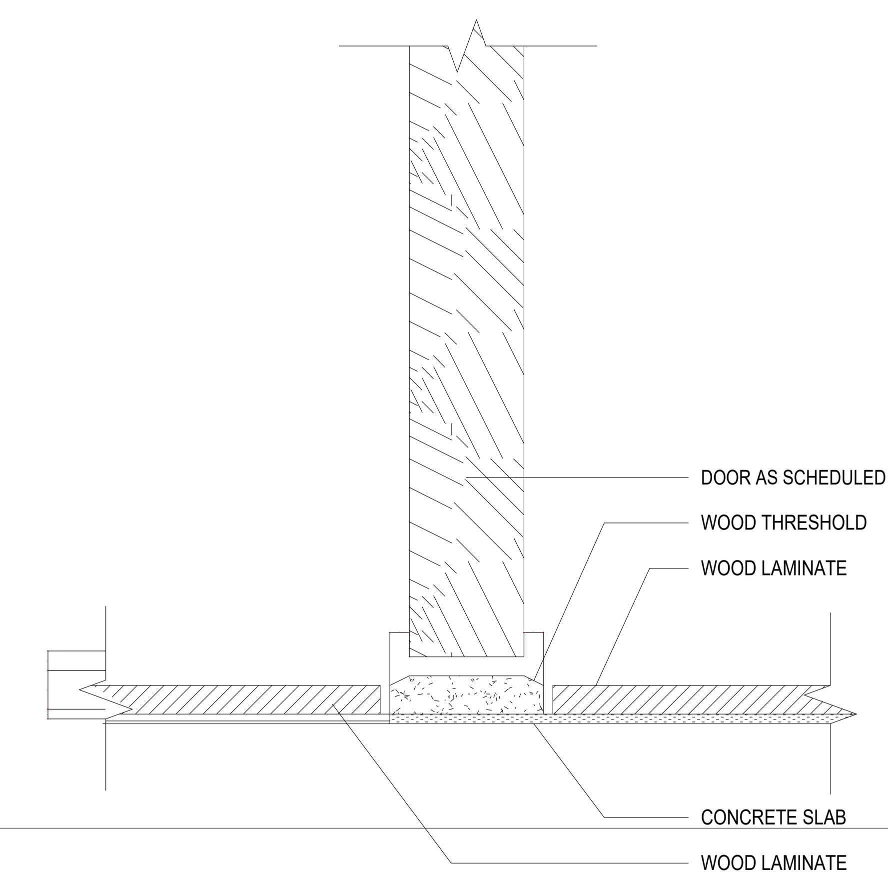

11 LAMINATE-W THRESHOLD-TILE DETAIL
SCALE: 6" = 1'-0"

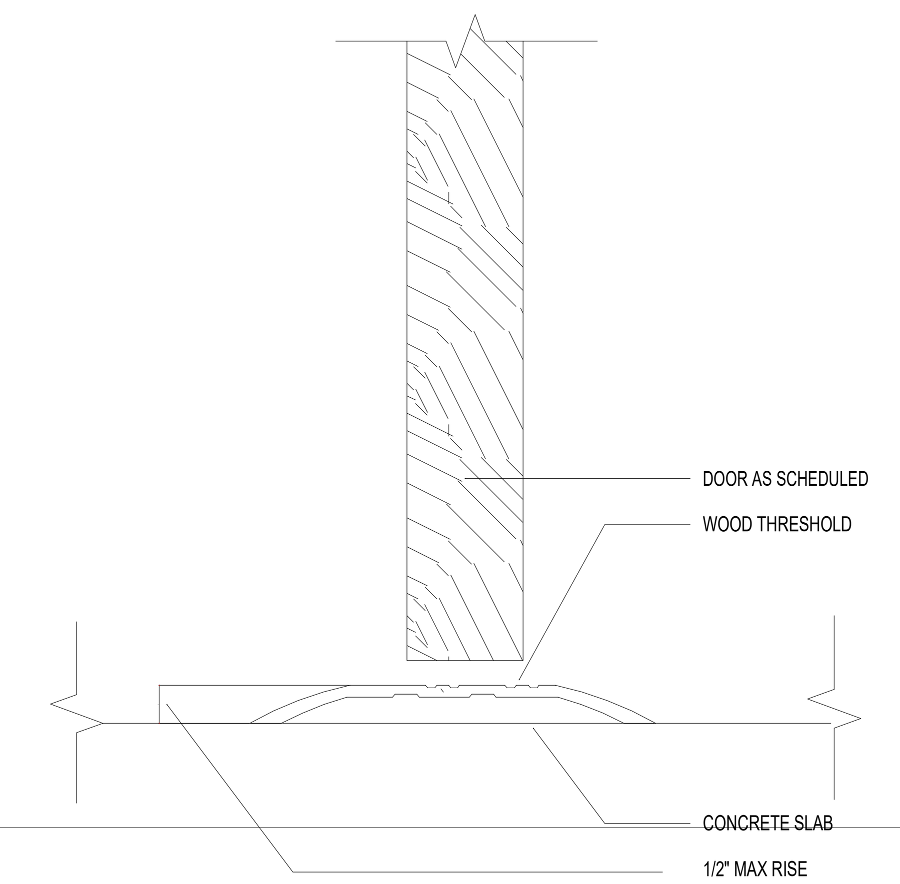

12 DOOR THRESHOLD DETAIL
SCALE: 6" = 1'-0"

SEAL

Sarasota ARCHITECTURE
Interior design inspections construction management
AKTMR Corporation company
1960 Stickney Point Road, Suite 201
Sarasota, Florida 34231 AR92053

(239) 443-6178 Cell
http://www.westcoastdrafting.com
West-Coast Drafting
- a drafting company - quality & accuracy -

REMODEL
1313 SE 47TH TER
CAPE CORAL FL 33904
STRAP: 07-45-24-C3-00360.0250
Folio ID: 10190045

BREWERY

SKYBAR AT 47TH LLC
TRUE
BUILDING

ISSUED FOR: *** CONCEPT ***

REVISIONS

MK	DESCRIPTION	DATE
No.	Description	Date

Project number: 23-2124.1
Project Issue Date: --
Project Status: CONCEPT

CONSTRUCTION DETAILS - BREWERY

SHEET: 7 of 19

SHEET NUMBER
A-1.8
1. ARCHITECTURE

NOTE: THESE PLANS ARE SCHEMATIC IN NATURE, IF A DISCREPANCY EXIST BETWEEN THE PLANS AND THE ACTUAL FIELD CONDITIONS, THE CONTRACTOR IS TO NOTIFY THE OWNER WITHIN 10 (TEN) DAYS. AFTER 10 DAYS, THE CONTRACTOR IS RESPONSIBLE FOR THE PROJECT IN ITS ENTIRETY.

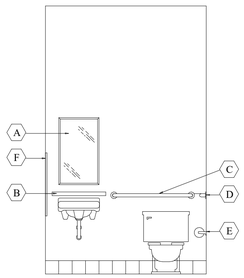

ITEM	MFR.	MFR. NO.	ITEM DESCRIPTION
A	BOBRICK	B-293 1830	TILT MIRROR
B	BOBRICK	B-2017 (6th Ed)	SOAP SHELF COMBINATION UNIT
C	BOBRICK	B-6806x36"	HANDCAP GRAB BAR
D	BOBRICK	B-6806x42"	HANDCAP GRAB BAR
E	BOBRICK	B-4388	TOILET PAPER HOLDER
F	BOBRICK	B-4369	PAPER TOWEL DISPENSER/WASTE RECEPTICLE
G	-	-	IMPERVIOUS FINISH

14 TYPICAL TOILET ROOM ELEVATION
SCALE: N.T.S.

1. THE CONTRACTOR SHALL CONSTRUCT THE PROJECT ACCORDING TO THE STRICTEST REQUIREMENT OF THE CODE: THE FLORIDA BUILDING CODE 2017 (6th Ed) 5th ED. IF THERE ARE ANY DISCREPANCIES, THE CONTRACTOR SHALL NOTIFY THE ARCHITECT IN WRITING PRIOR TO PROCEEDING WITH CONSTRUCTION. IF CONSTRUCTION DOES NOT MEET THESE STANDARDS, ALL TIME AND MONEY SPENT TO RECTIFY THE ERROR SHALL BE SOLELY AT THE CONTRACTOR'S EXPENSE.

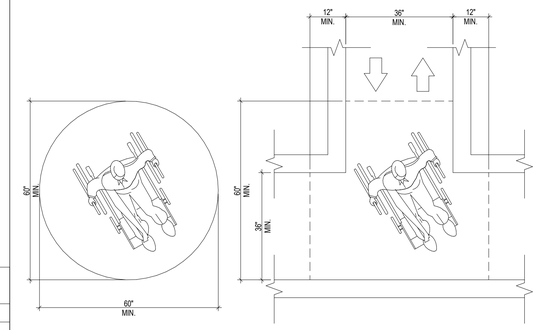

(a) 60-IN DIAMETER SPACE
(b) T-SHAPED SPACE FOR 180 DEGREE TURN

WHEELCHAIR TURNING SPACE

15 FLORIDA ACCESSIBILITY CODE
SCALE: N.T.S.

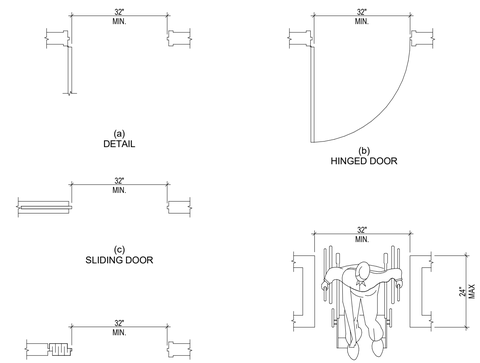

CLEAR DOORWAY WIDTH AND DEPTH

16 FLORIDA ACCESSIBILITY CODE
SCALE: N.T.S.

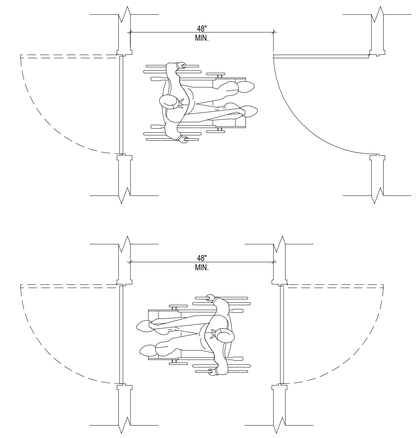

TWO HINGED DOORS IN SERIES

17 FLORIDA ACCESSIBILITY CODE
SCALE: N.T.S.

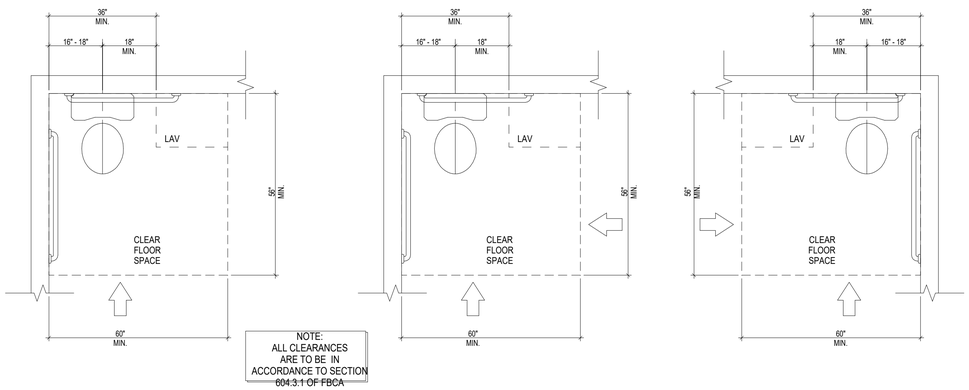

CLEAR FLOOR SPACE AT WATER CLOSETS (NOT IN STALL)

18 FLORIDA ACCESSIBILITY CODE
SCALE: N.T.S.

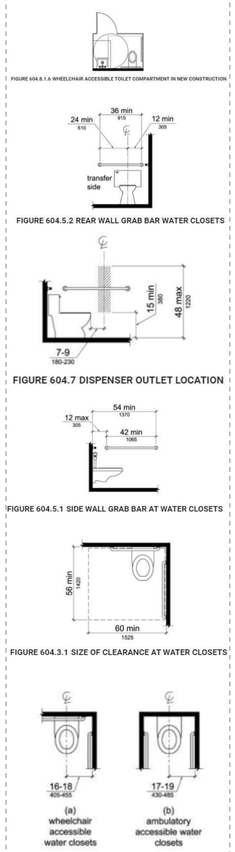

CONTRACTOR TO REFER TO **2020 Florida Building Code, Accessibility, 7th Edition** FOR ADDITIONAL INFORMATION AND ADA COMPLIANCE

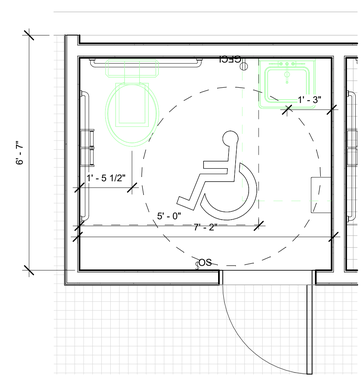

1 A-1.9 ENLERGED FLOOR PLAN - TOILET ROOM - BREWERY
1/2" = 1'-0"

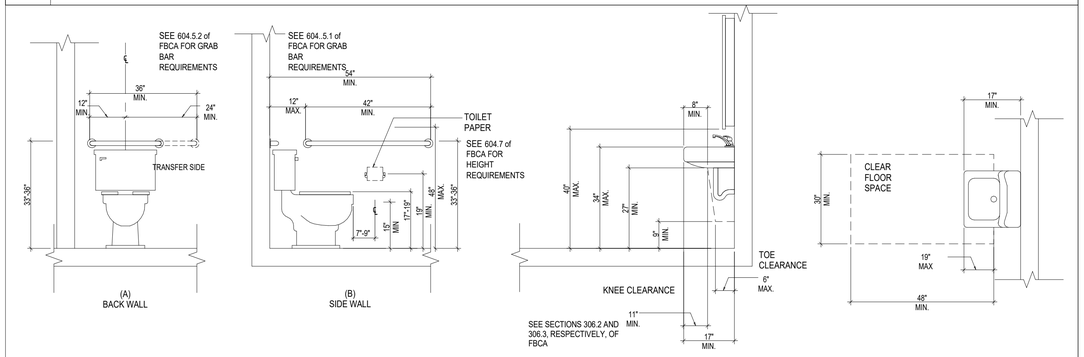

(A) BACK WALL
(B) SIDE WALL

GRAB BARS AT WATER CLOSETS

LAVATORY CLEARANCES

CLEAR FLOOR SPACE AT LAVATORIES

19 FLORIDA ACCESSIBILITY CODE
SCALE: N.T.S.

SEAL

Sarasota ARCHITECTURE
Interior design inspections construction management
A K T M R Corporation company
11960 Stickney Point Road, Suite 201
Sarasota, Florida 34231 AR92053

(239) 443-6178 Cell
http://www.westcoastdrafting.com
West-Coast Drafting
- a drafting company - quality & accuracy -

REMODEL
1313 SE 47TH TER
CAPE CORAL FL 33904
STRAP: 07-45-24-C3-00360.0250
Folio ID: 10190045

BREWERY

SKYBAR AT 47TH LLC
TRUE BUILDING

ISSUED FOR: *** CONCEPT ***

REVISIONS:

MK	DESCRIPTION	DATE
No.	Description	Date

Project number: 23-2124.1
Project Issue Date: --
Project Status: CONCEPT

ADA SPEC CONSTRUCTION DETAILS - BREWERY

SHEET: 8 of 19

SHEET NUMBER
A-1.9

L ARCHITECTURE

NOTE: THESE PLANS ARE SCHEMATIC IN NATURE, IF A DISCREPANCY EXIST BETWEEN THE PLANS AND THE ACTUAL FIELD CONDITIONS, THE CONTRACTOR IS TO NOTIFY THE OWNER WITHIN 10 (TEN) DAYS. AFTER 10 DAYS, THE CONTRACTOR IS RESPONSIBLE FOR THE PROJECT IN ITS ENTIRETY.

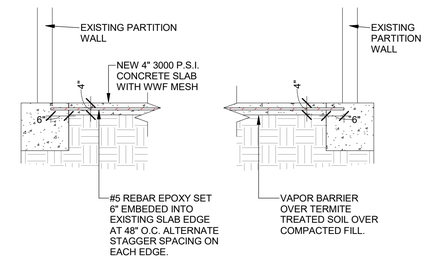

6 (A-1.10) NEW CONCRETE SLAB DETAIL
1/2" = 1'-0"

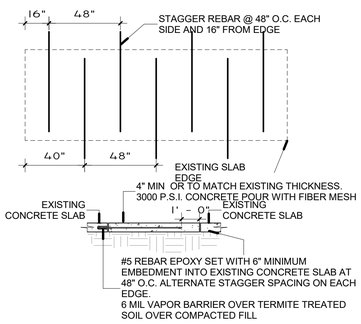

5 (A-1.10) Trench/Slab Repair Detail
1/4" = 1'-0"

12" PRECAST U-LINTELS *STANDARD LENGTHS*

OVERALL LENGTH	*TOP STEEL*	*BOTTOM STEEL*
3'-4"	2 -7/32" wire	2 -#5 rebar
3'-6"	2 -7/32" wire	2 -#5 rebar
4'-0"	2 -7/32" wire	2 -#5 rebar
4'-6"	2 -7/32" wire	2 -#5 rebar
4'-8"	2 -7/32" wire	2 -#5 rebar
5'-4"	2 -7/32" wire	2 -#5 rebar
5'-10"	2 -7/32" wire	2 -#5 rebar
6'-0"	2 -7/32" wire	2 -#5 rebar
6'-6"	2 -7/32" wire	2 -#5 rebar
6'-8"	2 -7/32" wire	2 -#5 rebar
7'-4"	2 -7/32" wire	2 -#5 rebar
7'-6"	2 -7/32" wire	2 -#5 rebar
8'-0"	2 -#3 rebar	2 -#5 rebar
8'-8"	2 -#3 rebar	2 -#5 rebar
9'-4"	2 -#3 rebar	2 -#5 rebar
10'-6"	2 -#3 rebar	2 -#5 rebar
10'-8"	2 -#3 rebar	2 -#5 rebar
11'-4"	2 -#3 rebar	2 -#5 rebar
12'-0"	2 -#3 rebar	2 -#5 rebar
13'-4"	2 -#3 rebar	2 -#5 rebar
14'-0"	2 -#3 rebar	2 -#5 rebar
14'-8"	2 -#3 rebar	2 -#5 rebar
15'-4"	2 -#3 rebar	2 -#5 rebar
17'-4"	2 -#3 rebar	2 -#5 rebar
19'-4"	2 -#3 rebar	2 -#5 rebar

Additional lengths available by special order

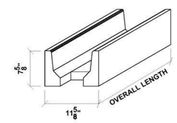

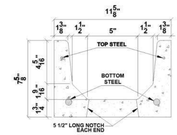

Rebar: ASTM A615 Grade 60
Wire: ASTM A510
Concrete Strength: 6000 psi
Average Self Weight: 44 plf
Finish: Grey Smooth Form

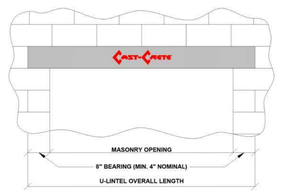

TYPICAL USE

 © 2015 Cast-Crete USA, Inc.

NOTES:
1. EXISTING WALL TO BE REMOVED
2. NEW WALL TO BE BUILD
3. CONTRACTOR TO MATCH REMAINING WALL IN STYLE AND CONSTRUCTION TYPE.
4. CMU BLOCKS TO BE FILLED SOLID

(S20) Provide #5 Vertical REINFORCING IN FILLED CELLS:
As required in "MASONRY CELL SPACING TABLE",
- FILL ALL CELLS
- (2) # 5 @ 2'-0" O.C.

(S21) For tie beams over masonry openings (12x16 nominal W/ (4) # 5's (2) top & (2) bottom) ADD #3 stirrups @ 6" O.C.. Where required to drop beam to top of opening head below in lieu of precast lintels - add an additional row of bottom steel for every 8" of drop required for dimensions between (UP TO 6") lower bottom row of steel 50% of drop - minimum 11/2" coverage.
OR
CAST-CRETE LINTELS MAY BE USED, SEE SCHEDULES THIS SHEET

CONTRACTOR TO PROVIDE SHORING AND SUPPORT FOR EXISTING ALL EXISTING BUILDING ELEMENTS TO REMAIN DURING CONSTRUCTION

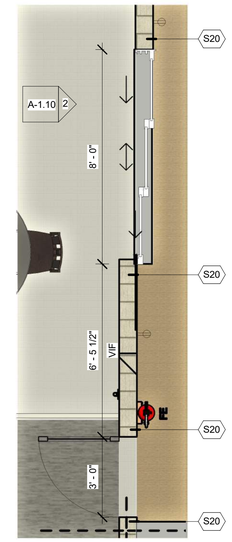

1 (A-1.10) FRONT ENTRANCE - BREWERY
3/8" = 1'-0"

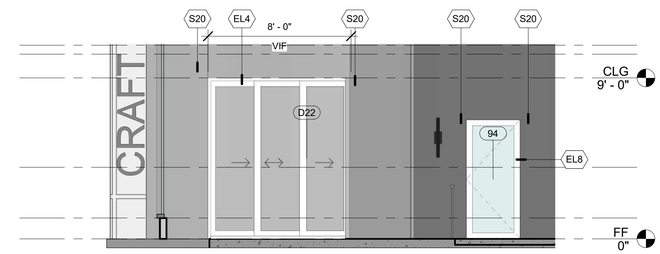

2 (A-1.10) PROPOSED OPENING
1/4" = 1'-0"

PLAN KEYNOTES

Key Value	Keynote Text
D4	DEMO EXISTING DOOR
EL4	NEW DOOR, SEE DOOR SCHEDULE FOR DETAILS
EL7	REMOVE EXISTING DOOR, & RAISE OPENING, AND PREP FOR NEW DOOR, SEE DETAIL THIS SHEET, CAST CRETE (SEE REFERENCE TABLE THIS SHEET) LINTEL MAY BE USED IN LIEU OF CONCRETE LINTEL
EL8	EXISTING DOOR
EL9	NEW WINDOWS, FRAMES, AND DOORS TO BE LMI RATED PER MIAMI-DADE, CONTRACTOR TO SUBMIT CUT SHEETS TO OWNER/EOR FOR APPROVAL
S1	24" X 36" PAD
S4	NEW CONCRETE PAD, AND COLUMN
S20	OPENING REINFORCEMENTS (S21)
S22	CONCRETE BASE PLATE W 'J' BOLTS EMBEDDED IN CONCRETE PAD, FLUSH WITH FLOOR

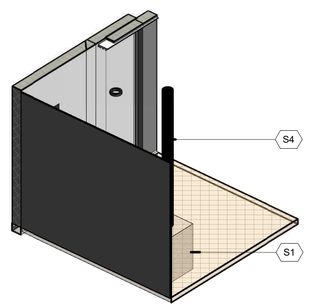

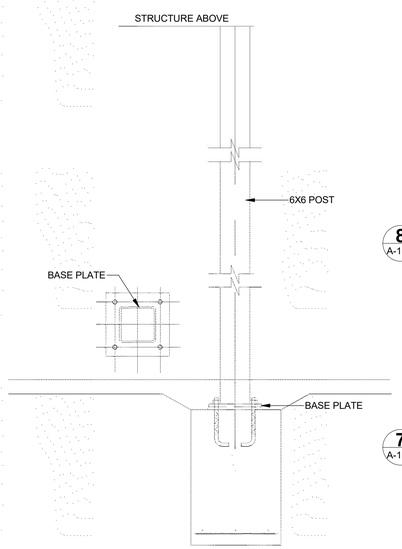

8 (A-1.10) ISOMETRIC COLUMN DETAIL

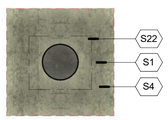

7 (A-1.10) COLUMN DETAIL
3/4" = 1'-0"

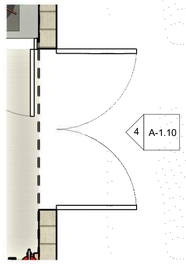

3 (A-1.10) LOADING ENTRANCE
3/8" = 1'-0"

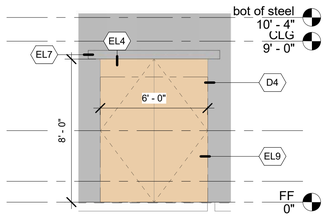

4 (A-1.10) LOADING ENTRANCE
1/4" = 1'-0"

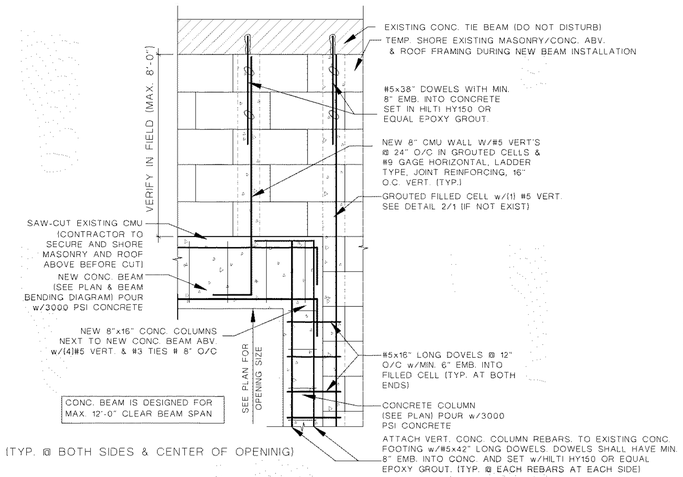

SEAL

Sarasota ARCHITECTURE
Interior design inspections construction management
AKTMR Corporation company
11960 Stickney Point Road, Suite 201
Sarasota, Florida 34231 AR92053

(239) 443-6178 Cell
http://www.westcoastdrafting.com
West-Coast Drafting
- a drafting company - quality & accuracy -

REMODEL
1313 SE 47TH TER
CAPE CORAL FL 33904
STRAP: 07-45-24-C3-00360.0250
Folio ID: 10190045

SKYBAR AT 47TH LLC

ISSUED FOR: *** CONCEPT ***

REVISIONS

MK	DESCRIPTION	DATE
No.	Description	Date

Project number: 23-2124.1
Project Issue Date: --
Project Status: CONCEPT

STRUCTURAL DETAILS - BREWERY

SHEET: 1 of 19

SHEET NUMBER
A-1.10
L ARCHITECTURE

M:\Dropbox\projects\22-2124 - 1313 SE 47th Ter - Aaron\CAD FILES\47 TERR v8.rvt

1/10/2024 10:20:00 AM

NOTE: THESE PLANS ARE SCHEMATIC IN NATURE, IF A DISCREPANCY EXIST BETWEEN THE PLANS AND THE ACTUAL FIELD CONDITIONS, THE CONTRACTOR IS TO NOTIFY THE OWNER WITHIN 10 (TEN) DAYS. AFTER 10 DAYS, THE CONTRACTOR IS RESPONSIBLE FOR THE PROJECT IN ITS ENTIRETY.

1/10/2024 11:21:01 AM

ELECTRICAL SPECIFICATIONS

DIVISION 16000 - ELECTRICAL

16000 - GENERAL:

1. ALL ELECTRICAL WORK FOR THE ENTIRE PROJECT SHALL BE PERFORMED IN A NEAT AND CRAFTSMANLIKE MANNER BY PERSONS SKILLED IN THE TRADE, AND SHALL BE DONE UNDER THE SUPERVISION OF A MASTER ELECTRICIAN LICENSED TO DO WORK IN THE AREA WHERE THE PROJECT IS TO BE CONSTRUCTED. ALL WORK SHALL BE IN STRICT ACCORDANCE WITH THE LATEST COPY OF THE NATIONAL ELECTRIC CODE PRESENTLY ENFORCED AND AS ATTENDED TO BY NAPLES, FLORIDA.

16100 - SCOPE:

1. THE CONTRACTOR SHALL PROVIDE ALL LABOR, MATERIALS AND EQUIPMENT NECESSARY FOR A COMPLETE ELECTRICAL SYSTEM INCLUDING, BUT NOT LIMITED TO, POWER SERVICES (TEMPORARY, NORMAL, AND STAND-BY OR EMERGENCY), SWITCHBOARDS, AUTOMATIC TRANSFER SWITCHES, SERVICE ENTRANCE(S), DISCONNECTS, DISTRIBUTION PANELS, CONDUIT, WIRING, JUNCTION AND OUTLET BOXES, WIRING DEVICES AND COVER PLATES, LIGHTING FIXTURES, CONNECTION CHORDS, SPECIAL CONNECTIONS AND OUTLETS, ALL AS ILLUSTRATED ON THE CONTRACT DOCUMENTS AND IN FULL COMPLIANCE WITH ALL ADOPTED CODES. THE ELECTRICAL CONTRACTOR SHALL COORDINATE ALL WORK WITH OTHER TRADES, UTILITY COMPANIES, AND GOVERNING AUTHORITIES.

16110 - CODES:

1. ALL WORK PERFORMED SHALL BE IN ACCORDANCE WITH ANSI, NFPA70, STATE OF FLORIDA LAWS, AND ALL LOCAL RULES AND REGULATIONS, INCLUDING THE NATIONAL ELECTRIC CODE AND THE FLORIDA ENERGY CODE PRESENTLY IN EFFECT.

16120 - PERMITS:

1. THE CONTRACTOR SHALL OBTAIN ALL PERMITS AND PAY ALL FEES ASSOCIATED THEREWITH. CONTRACTOR SHALL BE RESPONSIBLE FOR OBTAINING INSPECTIONS, INCLUDING ALL FEES ASSOCIATED WITH REINSPECTIONS.

16130 - DRAWINGS:

1. THE DRAWINGS ARE DIAGRAMMATIC, AND DO NOT SHOW ALL CHANGES IN HEIGHT, STRUCTURAL MEMBERS, DUCTWORK, PIPING, BRACKETS AND ANY OTHER NUMBER OF ITEMS WHICH MIGHT CAUSE A CONFLICT. THIS CONTRACTOR SHALL COORDINATE WITH OTHER TRADES AS TO THE LOCATION OF HIS DEVICES AND NECESSARY AREAS FOR PANELS AND CONDUIT/WIRING RUNS. VERIFY AND COORDINATE ALL ELECTRICAL WORK WITH ALL TRADES TO PROVIDE A TIMELY INSTALLATION. ADDITIONAL CHARGES DUE TO LACK OF COORDINATION WILL NOT BE APPROVED.

16200 - MATERIAL:

1. ALL MATERIALS SHALL BE NEW, FREE FROM DEFECTS, AND SHALL BE LISTED BY AND BEAR THE U.L. LABEL WHERE SUBJECT TO APPROVAL. MATERIALS SHALL BE OF THE SAME MANUFACTURER OR BRAND FOR EACH TYPE OF MATERIAL, UNLESS DESIGNATED OTHERWISE.

16210 - FIXTURES:

1. ALL FIXTURES SHALL BE AS LISTED IN THE LIGHTING FIXTURE SCHEDULES/ RECOMMENDATIONS.

2. LIGHTING FIXTURES SHALL BE FURNISHED, INSTALLED, AND LAMPED UNDER THIS CONTRACT.

16220 - PANELS:

1. ALL PANELS SHALL BE FURNISHED AS PER PANEL SCHEDULE. SQUARE D, CUTLER HAMMER AND ITE ARE ACCEPTABLE MANUFACTURERS.

2. ALL SWITCHBOARD AND OVERCURRENT DEVICES SHALL BE SERIES-RATED TO WITHSTAND THE AVAILABLE FAULT CURRENT; VERIFY WITH LOCAL UTILITY COMPANY. SEE PANEL SCHEDULE.

16230 - DEVICES:

1. EXTERIOR DISCONNECT SWITCHES SHALL BE NEMA 3R ENCLOSURES AND ELECTRICALLY PROTECTED AS PER MANUFACTURER'S SPECIFICATIONS.

2. INTERIOR DISCONNECT SWITCHES SHALL BE NEMA 1 ENCLOSURES AND ELECTRICALLY PROTECTED AS PER MANUFACTURER'S SPECIFICATIONS.

3. SWITCHES SHALL BE 20 AMP, SPECIFICATION GRADE TOGGLE SWITCHES, SIDE WIRED WITH GROUNDING TERMINAL; COLOR SHALL BE WHITE (UNLESS NOTED OTHERWISE) WITH MATCHING COVERPLATE; MOUNTING HEIGHT SHALL BE +48" AFF.

4. RECEPTACLES SHALL BE 15 AMP (MINIMUM), SPECIFICATION GRADE, SIDE WIRED WITH GROUNDING TERMINAL; COLOR SHALL BE WHITE (UNLESS NOTED OTHERWISE) WITH MATCHING COVERPLATE; MOUNTING HEIGHT NOTED IN SYMBOL LEGEND OR ON DRAWING.

5. ALL RECEPTACLES INSTALLED IN KITCHENS, OR WITHIN 6 FEET (6') OF A WATER SUPPLY (i.e.: SINK), SHALL BE GROUND FAULT CIRCUIT INTERRUPTER (G.F.C.I.) DEVICES WITH DOWNSTREAM DEVICES IDENTIFIED.

6. ALL 120-VOLT, SINGLE PHASE, 15- AND 20-AMPERE BRANCH CIRCUITS SUPPLYING OUTLETS INSTALLED IN BATHROOMS SHALL HAVE GROUND-FAULT CIRCUIT-INTERRUPTER PROTECTION FOR PERSONNEL.

16240 - BRANCH CIRCUIT WIRING:

1. ALL CONDUCTORS SHALL BE COPPER UNLESS OTHERWISE SPECIFIED ON PLANS.

2. MINIMUM BRANCH CIRCUIT WIRING SHALL BE #12 AWG THWN COPPER.

EXCEPTION NO. 1:BRANCH CIRCUIT WIRING FOR DEDICATED LOADS, SUCH AS A PERMANENTLY INSTALLED APPLIANCE OR OTHER EQUIPMENT, SHALL BE SIZED ACCORDING TO THE MANUFACTURER'S SPECIFICATIONS FOR THAT APPLIANCE OR EQUIPMENT, OR BY THE N.E.C. PRESENTLY IN EFFECT, WHICHEVER IS GREATER. REFER TO PANEL SCHEDULES.

16300 - INSTALLATION:

16310 - GENERAL:

1. ROUGH-IN SHALL BE COORDINATED WITH ARCHITECTURAL DRAWINGS AND FIELD CONDITION FOR EXACT LOCATIONS, AS WELL AS EQUIPMENT SIZE, TO AVOID CONFLICT WITH OTHER TRADES.

2. PRIOR TO ROUGH-IN, THE CONTRACTOR SHALL RELOCATE, AS DIRECTED BY THE OWNER/ARCHITECT, ANY PIECE OF EQUIPMENT IN THE VERTICAL AND/OR HORIZONTAL DIRECTION UP TO 15'-0" FROM THE LOCATION SHOWN ON THE DRAWINGS AT NO ADDITIONAL COSTS TO THE OWNER.

16320 - WIRING METHODS:

1. BELOW GRADE: SINGLE- OR MULTI-CONDUCTOR COPPER WIRE WITH GROUND, MEETING N.E.C. AND NEMA REQUIREMENTS, IN APPROVED NONMETALLIC CONDUIT. CONDUIT MAY BE RUN IN OR BELOW CONCRETE, AND CONCEALED IN WALLS TO FIRST BOXES. ALL PVC COMPONENTS (PIPING, FITTINGS, CEMENT, ETC.) SHALL BE FROM THE SAME MANUFACTURER.

2. EXTERIOR ABOVE GRADE: SINGLE- OR MULTI-CONDUCTOR COPPER WIRE WITH GROUND, MEETING N.E.C. AND NEMA REQUIREMENTS, IN APPROVED METALLIC OR NONMETALLIC CONDUIT. ALL COMPONENTS (PIPING, FITTINGS, ETC.) SHALL BE FROM THE SAME MANUFACTURER.

NOTE: MAXIMUM LENGTH OF FLEXIBLE CONDUIT SHALL BE SIX FEET (6').

3. EXTERIOR EQUIPMENT: SINGLE- OR MULTI-CONDUCTOR COPPER WIRE WITH GROUND, MEETING N.E.C. AND NEMA REQUIREMENTS, IN APPROVED LIQUID-TIGHT FLEXIBLE METALLIC OR NONMETALLIC CONDUIT (MINIMUM 3/4"). ALL COMPONENTS (PIPING, FITTINGS, ETC.) SHALL BE FROM THE SAME MANUFACTURER.

NOTE: MAXIMUM LENGTH OF FLEXIBLE CONDUIT BETWEEN MEANS OF DISCONNECT (OR JUNCTION BOX) AND EQUIPMENT SHALL BE THREE FEET (3').

4. INTERIOR: SINGLE- OR MULTI-CONDUCTOR COPPER WIRE WITH GROUND, MEETING N.E.C. AND NEMA REQUIREMENTS, IN APPROVED METALLIC (EMT OR EQ) CONDUIT. ALL COMPONENTS (PIPING, FITTINGS, ETC.) SHALL BE FROM THE SAME MANUFACTURER. CONDUITS SHALL BE CONCEALED IN OR BEHIND CEILINGS, WALLS, OR FLOORS, EXCEPT WHERE EXPOSED RACEWAYS ARE SPECIFICALLY PERMITTED.

NOTE: EMT OR EQ SHALL NOT BE INSTALLED IN LOCATIONS (1) SUBJECT TO SEVERE DAMAGE, (2) IN CONTACT WITH EARTH, (3) IN CONCRETE SLABS ON GRADE, (4) OTHER LOCATIONS AS LISTED IN N.E.C 2011, ARTICLE 358.12.

5. ELECTRICAL SYSTEM EXPANSION: ANY PANELBOARD MOUNTED SO THAT ITS FRONT FACE IS FLUSH WITH THE FINISHED WALL SHALL HAVE ONE (1) 3/4" EMT OR EQ CONDUIT INSTALLED FROM PANELBOARD TO ACCESSIBLE CEILING SPACE FOR EVERY FOUR (4) OR MAJOR FRACTION THEREOF, POLES INDICATED AS "SPACE" OR "SPARE" IN THE PANELBOARD SCHEDULE PER THESE DOCUMENTS.

EXCEPTION NO. 1:PANELBOARDS INSTALLED ON A WALL SURFACE, WHERE AT LEAST THREE (3) SIDES, NOT INCLUDING THE FRONT, REMAIN ACCESSIBLE AFTER CERTIFICATE OF OCCUPANCY SHALL NOT BE REQUIRED TO MEET #16320.5.

5. ELECTRICAL BOXES: ALL OUTLET, DEVICE, AND JUNCTION BOXES SHALL BE STANDARD 4" SQUARE GALVANIZED STEEL OR APPROVED PLASTIC, 1-1/2" DEEP, WITH DEVICE RINGS OF THE SAME MATERIAL, UNLESS OTHERWISE NOTED. GALVANIZED BOXES SHALL BE MANUFACTURED BY APPLETON, NATIONAL, STEEL CITY, RACO OR APPROVED EQUAL. PLASTIC BOXES SHALL BE ALLIED, NELCO, CARLON, OR EQUAL. ALL ELECTRICAL BOXES SHALL BE ACCESSIBLE AFTER CERTIFICATE OF OCCUPANCY.

6. THRU-FEEDS: MAINTAIN THRU-FEEDS ON ALL ELECTRICAL DEVICES AT C.O.

16330 - EQUIPMENT:

1. WIRE TO, AND MAKE CONNECTIONS TO, ALL PIECES OF EQUIPMENT FURNISHED BY OTHERS FOR COMPLETE AND SATISFACTORY OPERATION BY OTHERS.

2. THIS CONTRACT SHALL INCLUDE CONNECTION OF LINE VOLTAGE ONLY. CONTROL WIRING SHALL BE BY THE HVAC CONTRACTOR.

16340 - GROUNDING:

1. THE ENTIRE ELECTRICAL GROUNDING SYSTEM SHALL BE IN STRICT ACCORDANCE WITH THE REQUIREMENTS OF SECTION 250.66 AND 250.122 OF THE NATIONAL ELECTRIC CODE, INCLUDING BUT NOT LIMITED TO, THE ELECTRICAL SERVICE, ITS EQUIPMENT AND ENCLOSURE, CONDUITS AND OTHER CONDUCTIVE ENCLOSURES, NEUTRAL OR IDENTIFIED CONDUCTOR OF INTERIOR WIRING SYSTEM, MAIN PANELBOARD, POWER AND LIGHTING PANELBOARDS, NON-CURRENT-CARRYING METAL PARTS OF FIXED EQUIPMENT SUCH AS MOTORS, STARTER AND CONTROLLER CABINETS, INSTRUMENT CASES AND LIGHTING FIXTURES.

2. PROVIDE A SERVICE GROUND ACCORDING TO N.E.C. ARTICLE 250. THE MINIMUM INSTALLATION SHALL INCLUDE: BUILDING FOOTER/FOUNDATION REINFORCING STEEL TURNED UP OR OTHERWISE EXPOSED AT THE SERVICE LOCATION WITH APPROVED CONNECTOR TO BOND A GROUNDING CONDUCTOR SIZED PER TABLE 250 TO THE STEEL AND A DRIVEN ROD GROUND (MINIMUM 5/8" BY 8' DEEP) WITH #6 COPPER GROUNDING CONDUCTOR. IF AVAILABLE ON THE PREMISES, ALSO BOND METAL COLD WATER PIPING, METAL BUILDING FRAME AND GROUND RING WITH JUMPERS SIZED FROM 250-94.

3. ALL TELEPHONE, DATA, TELEVISION, AND OTHER TERMINAL EQUIPMENT SHALL BE BONDED TO THE GROUNDING ELECTRODE WITH MINIMUM #6 AWG-CU.

16350 - WARRANTY: NOTE

1. ELECTRICAL CONTRACTOR SHALL PROVIDE FULL WARRANTY (PARTS AND LABOR) ON ALL EQUIPMENT AND MATERIALS FURNISHED UNDER THE SCOPE OF WORK FOR A PERIOD OF ONE YEAR FROM THE CERTIFICATE OF OCCUPANCY.

2. E.C. SHALL PROVIDE OWNER AND ENGINEER WITH REPRODUCIBLE "AS-BUILT" DRAWINGS SHOWING ALL REQUIRED MODIFICATIONS THAT HAVE OCCURRED IN THE FIELD

SUBMITTALS & SUBSTITUTIONS

UPON RECEIPT OF A CONTRACT, THE CONTRACTOR SHALL PROVIDE SIX (6) BOUND SUBMITTAL PACKAGES OF ALL EQUIPMENT, DEVICES, FIXTURES, ETC., TO THE ARCHITECT AND ENGINEER (FROM HERE ON, REFERRED TO AS "A/E") FOR REVIEW.

ALL SUBMITTALS AND/OR SUBSTITUTIONS SHALL BE DELIVERED TO THE A/E A MINIMUM OF FIFTEEN (15) BUSINESS DAYS AFTER CONTRACT. A/E SHALL REVIEW, COMMENT, AND RETURN THE SUBMITTAL AND/OR SUBSTITUTIONS REQUESTS TO THE CONTRACTOR A MINIMUM OF FIVE (5) DAYS THERE AFTER. ANY AND ALL APPROVALS WILL BE ONLY AT THE DISCRETION OF THE A/E. SUBMITTAL PACKAGES SHALL BE RETURNED TO THE CONTRACTOR WITH COMMENTS BY THE A/E, IF NECESSARY, FOR A RE-SUBMITTAL TO THE A/E.

PRIOR TO ORDERING ANY ITEMS SPECIFIED FOR THIS PROJECT, THE CONTRACTOR SHALL HAVE WRITTEN APPROVAL FROM THE A/E. SUBSTITUTIONS WILL NOT BE ACCEPTED WITHOUT WRITTEN APPROVAL BY A/E.

TYPICAL NOTES:

1. SWITCHED RECEPTACLES: SWITCH TOP HALF OF RECEPTACLE; BOTTOM SHALL REMAIN HOT!

2. EQUIPMENT FURNISHED AND PHYSICALLY INSTALLED BY "OTHERS". ALL ELECTRICAL CONNECTIONS EXTERNAL TO THE EQUIPMENT SHALL BE MADE BY THIS CONTRACTOR. WIRE, CONDUIT, LUGS, RECEPTACLES, PIGTAILS, DISCONNECTS, ETC. AS MAY BE REQUIRED SHALL BE FURNISHED BY THIS CONTRACTOR.
NOTE: INCLUDE WORSE CONDITION IN PRICING. VERIFY ROUGH-IN LOCATIONS, TYPE OF CONNECTION AND AMPACITY REQUIRED FROM APPLICABLE EQUIPMENT DRAWINGS PRIOR TO INSTALLING ANY CONDUIT, CONDUCTORS OR BOXES.

3. PROVIDE WALL DIMMER WITH TUNGSTEN SURGE AND RFI PROTECTION. SLIDE ACTION WITH "OFF" POSITION AT BOTTOM.

4. WALL TELEPHONE/DATA OUTLET. INSTALL 2-GANG BOX WITH MODULAR TELEPHONE DEVICE IN COVER PLATE. INSTALL (2) 3/4" EMT OR EQ CONDUITS TO ACCESSIBLE CEILING SPACE OR HOMERUN TO TELEPHONE/COMPUTER TERMINAL EQUIPMENT. HEIGHT, UNLESS NOTED, IS 18" ABOVE FINISH FLOOR.

5. PROVIDE LIGHT FIXTURE AND RECEPTACLE AT LOCATIONS INDICATED FOR HVAC MAINTENANCE LIGHTING. USE COMBINATION SWITCH AND RECEPTACLE FOR LIGHT CONTROL. FIELD DETERMINES EXACT LOCATION AND HEIGHT.

GENERAL NOTES: ELECTRICAL

THE ELECTRICAL CONTRACTOR SHALL VERIFY AND COORDINATE ALL ELECTRICAL SERVICE ROUGH-IN AND INSTALLATION DETAILS, FEES, WITH THE LOCAL POWER COMPANY/UTILITY FIELD ENGINEER PRIOR TO AND INCLUDE IN BID!

THE ELECTRICAL INSTALLATION SHALL BE IN ACCORDANCE WITH ALL STATE/LOCAL BUILDING CODES/ORDINANCES/REGULATIONS PRESENTLY IN EFFECT. IN ADDITION, COMPLIANCE WITH THE NATIONAL ELECTRICAL CODE (N.E.C.) PRESENTLY IN EFFECT.

THE ELECTRICAL CONTRACTOR SHALL VISIT THE SITE IN ORDER TO FAMILIARIZE HIMSELF WITH EXISTING CONDITIONS, FAILURE TO DO SO WILL NOT WARRANT ANY ADDITIONAL CHARGES TO THE OWNER.

THE ELECTRICAL CONTRACTOR SHALL INCLUDE IN HIS BID, ANY CUTTING OR PATCHING OF CONCRETE/ASPHALT PAVEMENTS, ETC. TO RUN ELECTRICAL.

ALL EQUIPMENT, FIXTURES, ETC. SHALL BE STARTED, TESTED, ADJUSTED AND PLACED IN SATISFACTORY OPERATING CONDITION. THIS CONTRACTOR SHALL GUARANTEE ALL WORKMANSHIP, MATERIALS AND EQUIPMENT TO BE FREE OF DEFECTS FOR A PERIOD OF ONE (1) YEAR FROM DATE OF CERTIFICATE OF OCCUPANCY (C.O.), AND SHALL REPAIR ANY SUCH DEFECTS WITHOUT COST TO THE OWNER. ALL EQUIPMENT SHALL BE COVERED FOR THE DURATION OF THE MANUFACTURER'S GUARANTEE OR WARRANTY. THIS CONTRACTOR SHALL FURNISH THE OWNER WITH ALL MANUFACTURER'S GUARANTEE AND WARRANTIES.

"WAFER" OR "PIGGYBACK" BREAKERS SHALL NOT BE PERMITTED.

HVAC AIR HANDLER AND CONDENSING UNIT CIRCUIT BREAKERS SHALL BE U.L. LISTED AS "HACR" RATED IN ORDER TO USE NON-AUTO DISCONNECTS AT HVAC EQUIPMENT. IF NOT LISTED, THEN A FUSED DISCONNECT IN ACCORDANCE WITH THE EQUIPMENT MANUFACTURER'S NAMEPLATE REQUIREMENTS SHALL BE INSTALLED AT THE EQUIPMENT.

THE ELECTRICAL, GENERAL, HVAC, AND PLUMBING CONTRACTOR(S) SHALL STRICTLY ADHERE TO THE FOLLOWING ITEMS WHEN DEALING WITH ELECTRICAL EQUIPMENT CLEARANCES:

A.)NO PIPING OR DUCTWORK OF ANY KIND SHALL BE INSTALLED ABOVE ANY SWITCHBOARD OR PANELBOARD. THIS AREA SHALL REMAIN CLEAN FROM THE EQUIPMENT TO 25' ABOVE OR TO THE BOTTOM OF THE STRUCTURAL SLAB.

B.)A CLEARANCE OF 36" MINIMUM SHALL BE MAINTAINED IN FRONT OF ELECTRICAL EQUIPMENT FOR THE ENTIRE WIDTH OF THE EQUIPMENT, PLUS A MINIMUM OF 30" TOTAL LEFT/RIGHT CLEARANCE.

ALL "WEATHERPROOF" ("WP") DEVICES SHALL BE PROVIDED AND INSTALLED WITH A WEATHER-SHIELDING COVER.

ALL ELECTRICAL CONDUITS NOT CONTAINING SPECIFIED CONDUCTORS SHALL HAVE A PULL WIRE INSTALLED.

DO NOT SCALE THE ELECTRICAL DRAWINGS; REFER TO THE ARCHITECTURAL PLANS AND FIELD CONDITIONS FOR EQUIPMENT LOCATIONS, CABINETRY, CEILING GRIDS, DOOR SWINGS, ETC.

THE INTENT OF THESE DRAWINGS IS TO PROVIDE A COMPLETE AND FULLY OPERATIONAL ELECTRICAL INSTALLATION.

IT IS NOT THE INTENT OF THESE PLANS TO SHOW ALL DETAILS OF CONSTRUCTION. THE ELECTRICAL CONTRACTOR SHALL PROVIDE ALL ITEMS SUCH AS HARDWARE, J-BOXES, CONDUIT FITTINGS, ETC., AS NECESSARY FOR A COMPLETE ELECTRICAL SYSTEM INSTALLATION.

TECHNICIANS SKILLED IN THEIR TRADE SHALL PERFORM ALL ELECTRICAL INSTALLATIONS IN A PROFESSIONAL MANNER.

WIRE TO, AND MAKE CONNECTIONS AS NECESSARY, TO ALL PIECES OF EQUIPMENT (FURNISHED BY OTHERS), FOR COMPLETE AND OPTIMAL OPERATION BY THE OWNER.

PROVIDE CIRCUIT BREAKERS, AS NECESSARY, TO ACCOMMODATE ALL NEW CIRCUITS INSTALLED.

ALL SERVICE AND FEEDER CONDUITS SHALL HAVE EXPANSION FITTINGS WHEN PENETRATING SLABS, TO ALLOW FOR STRUCTURAL SETTLEMENT.

PROVIDE "PVC" CONDUITS STUBBED OUT WITH PULL WIRE, BELOW GRADE, IN ORDER TO PROVIDE CONCEALED TELEPHONE AND/OR DATA SERVICE ENTRANCE.

PROVIDE TIME CLOCKS WITH BATTERY BACK-UP TO CONTROL ALL SIGNAGE AND EXTERIOR LIGHTING CIRCUITS; SEE POWER RISER DIAGRAM FOR ADDITIONAL DETAILS.

ALL CONDUCTORS SHALL BE TYPE THHN/THWN, COPPER (CU) UNLESS OTHERWISE CALLED FOR ON THESE DOCUMENTS. SEE PANEL SCHEDULE.

NOTICE TO CONTRACTOR: REVISIONS TO THESE DRAWINGS AND CERTIFICATION THEREOF WHICH MAY BE REQUIRED BECAUSE OF CONTRACTOR OPTED REVISIONS, SHALL BE COMPENSATED TO THE ENGINEER(S) BY THE REQUESTING CONTRACTOR. PAYMENT SHALL BE REQUIRED AT THE TIME OF CERTIFICATION DELIVERY.

GENERAL NOTES:

CONTRACTOR SHALL REVIEW ALL CUT SHEETS FOR EQUIPMENT INSTALLED IN THIS PROJECT TO VERIFY ALL LOADING, OVER-CURRENT PROTECTION/MAX FUSE SIZE FOR ALL EQUIPMENT. THIS INCLUDES BUT IS NOT LIMITED TO ALL PUMPS, HVAC EQUIPMENT, LIGHTING, APPLIANCES ETC. THIS SHALL BE DONE PRIOR TO FINAL EQUIPMENT CONNECTION.

CONTRACTOR SHALL VERIFY VOLTAGE SUPPLIED TO STRUCTURE TO BE THE SAME VOLTAGE AS STATED ON THE RISER DIAGRAM, PANEL SCHEDULES, OR ANY OTHER PLACE ON THESE DRAWINGS. CONTRACTOR SHALL VERIFY VOLTAGE BETWEEN ALL PHASES IS EQUAL TO ENSURE THE STRUCTURE IS NOT SUPPLIED WITH A OPEN DELTA SERVICE. THIS SHALL BE DONE PRIOR TO ANY ELECTRICAL CONNECTION OF ANY ELECTRICAL DEVICES.

CONTRACTORS NOTES:

LIMITED ENGINEERING FIELD INVESTIGATION WAS PERFORMED TO ILLUSTRATE TO THE CONTRACTOR SOME FIELD CONDITIONS. PRIOR TO BID, THE CONTRACTOR SHALL PERFORM COMPREHENSIVE FIELD INVESTIGATION TO DETERMINE FIELD CONDITIONS NECESSARY TO EXECUTE THE WORK UNDER THIS CONTRACT. BASED ON THE RESULTS OF THE CONTRACTORS FIELD INVESTIGATION, ELECTRICAL LAYOUTS AS SHOWN ON THESE DRAWINGS MAY NEED SOME MODIFICATIONS TO BE COORDINATED WITH THE ACTUAL FIELD CONDITIONS FOUND BY THE CONTRACTOR.

EQUIPMENT ELECTRICAL ROUGH-INs HAVE BEEN COORDINATED AND ARE LISTED IN PANEL SCHEDULES. THE CONTRACTOR SHALL VERIFY THE ELECTRICAL REQUIREMENTS OF EACH PIECE OF EQUIPMENT PRIOR TO ROUGH-IN, WHICH MAY RESULT IN REVISING CERTAIN EQUIPMENT CIRCUITS. THE A/E SHALL BE ADVISED OF ANY AND ALL REVISIONS REQUIRED TO THESE CONSTRUCTION DOCUMENTS.

WORK UNDER THIS PROJECT SHALL COMPLY WITH THE NEC 2014 (NFPA-70)

NOTE: THESE PLANS ARE SCHEMATIC IN NATURE, IF A DISCREPANCY EXIST BETWEEN THE PLANS AND THE ACTUAL FIELD CONDITIONS, THE CONTRACTOR IS TO NOTIFY THE OWNER WITHIN 10 (TEN) DAYS. AFTER 10 DAYS, THE CONTRACTOR IS RESPONSIBLE FOR THE PROJECT IN ITS ENTIRETY.

Branch Panel: P-1

Location:		Volts:	120/240 Single	A.I.C. Rating:	
Supply From:		Phases:	1	Mains Type:	
Mounting:	Recessed	Wires:	3	Mains Rating:	400 A
Enclosure:				MCB Rating:	400 A

Notes:

CKT	Circuit Description	Wire Size	Trip	Poles	A		B		Poles	Trip	Wire Size	Circuit Description	CKT
1	RECEPTICAL - TOILET ROOMS	1/2"C,1#12,#12N,#12G	20 A	1	360 VA	180 VA			1	20 A	1/2"C,1#12,#12N,#12G	GENERAL POWER	2
3	GENERAL POWER	1/2"C,1#12,#12N,#12G	20 A	1			360 VA	1350 VA	2	20 A	1/2"C,2#12,#12G	BREWERY EQUIPMENT	4
5	BREWERY EQUIPMENT	1/2"C,2#12,#12G	20 A	2	1350 VA	1350 VA			--	--	--	--	6
7	--	--	--	--			1350 VA	1350 VA	2	20 A	1/2"C,2#12,#12G	BREWERY EQUIPMENT	8
9	RECEPTICAL - OFFICE	1/2"C,1#12,#12N,#12G	20 A	1	540 VA	1350 VA			--	--	--	--	10
11	Power	1/2"C,2#10,#10G	30 A	2			2100 VA	720 VA	1	20 A	1/2"C,1#12,#12N,#12G	GENERAL POWER	12
13	--	--	--	--	2100 VA	1260 VA			1	20 A	1/2"C,1#12,#12N,#12G	GENERAL POWER	14
15	BAR AREA LIGHTING	1/2"C,1#12,#12N,#12G	20 A	1			725 VA	475 VA	1	20 A	1/2"C,1#12,#12N,#12G	GENERAL LIGHTING	16
17	GENERAL LIGHTING	1/2"C,1#12,#12N,#12G	20 A	1	850 VA	0 VA			1	20 A	1/2"C,1#12,#12N,#12G	EM LIGHTING	18
19								5200 VA	2	60 A	3/4"C,2#4,#10G	Cooling	20
21						5200 VA			--	--	--	--	22
23	Other	1/2"C,1#12,#12N,#12G	20 A	1			0 VA	0 VA	1	20 A	1/2"C,1#12,#12N,#12G	Other	24
25	Other	1/2"C,1#12,#12N,#12G	20 A	1	0 VA								26
27													28
29													30
31													32
33													34
35													36
37													38
39													40
41													42
				Total Load:	13877 VA		13008 VA						
				Total Amps:	116 A		108 A						

Legend:

Load Classification	Connected Load	Demand Factor	Estimated Demand	Panel Totals	
Cooling	10400 VA	100.00%	10400 VA		
Other	0 VA	0.00%	0 VA	Total Conn. Load:	26883 VA
Receptacle	11520 VA	93.40%	10760 VA	Total Est. Demand:	26661 VA
Power	4200 VA	100.00%	4200 VA	Total Conn.:	112 A
Lighting	2050 VA	125.00%	2563 VA	Total Est. Demand:	111 A

NOTES:

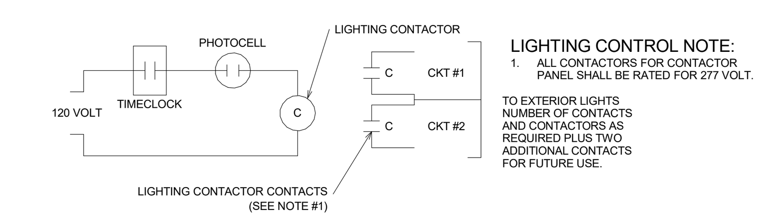

EXTERIOR LIGHTING CONTROL CIRCUIT

SCALE: NOT TO SCALE

GROUNDING BRIDGE, SEE DETAIL THIS SHEET

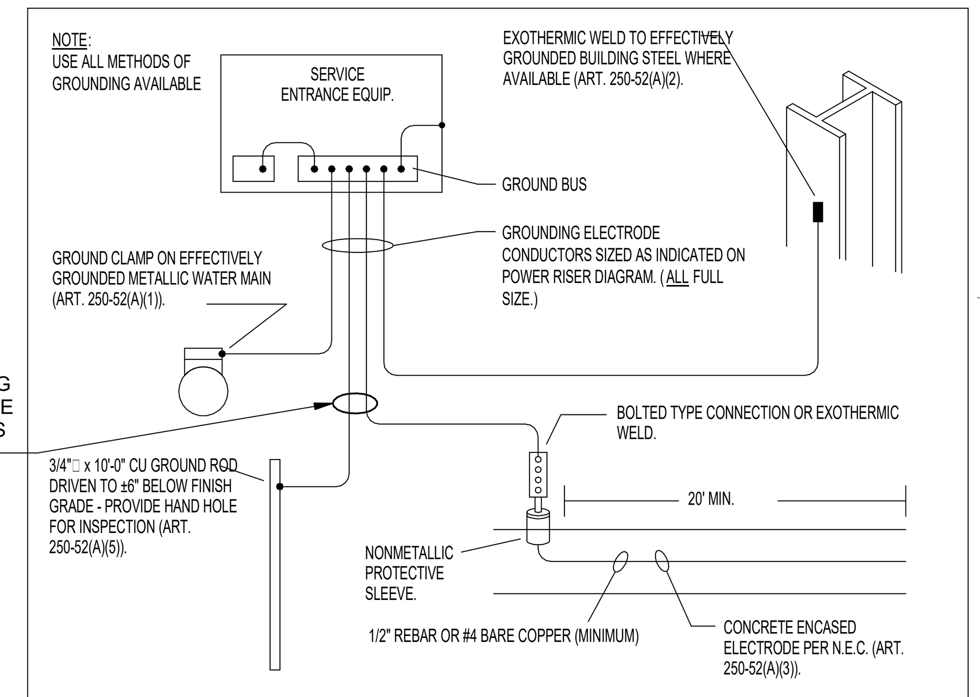

SERVICE GROUND DETAIL

SCALE: N.T.S.

1 E-1

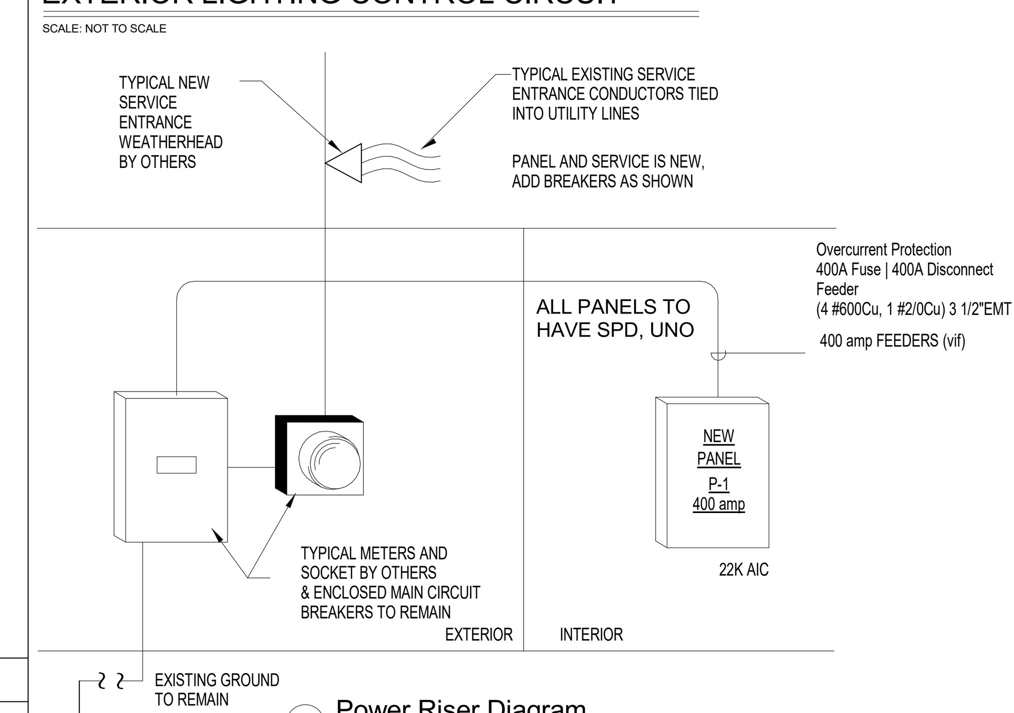

1 Power Riser Diagram
1/4" = 1'-0"

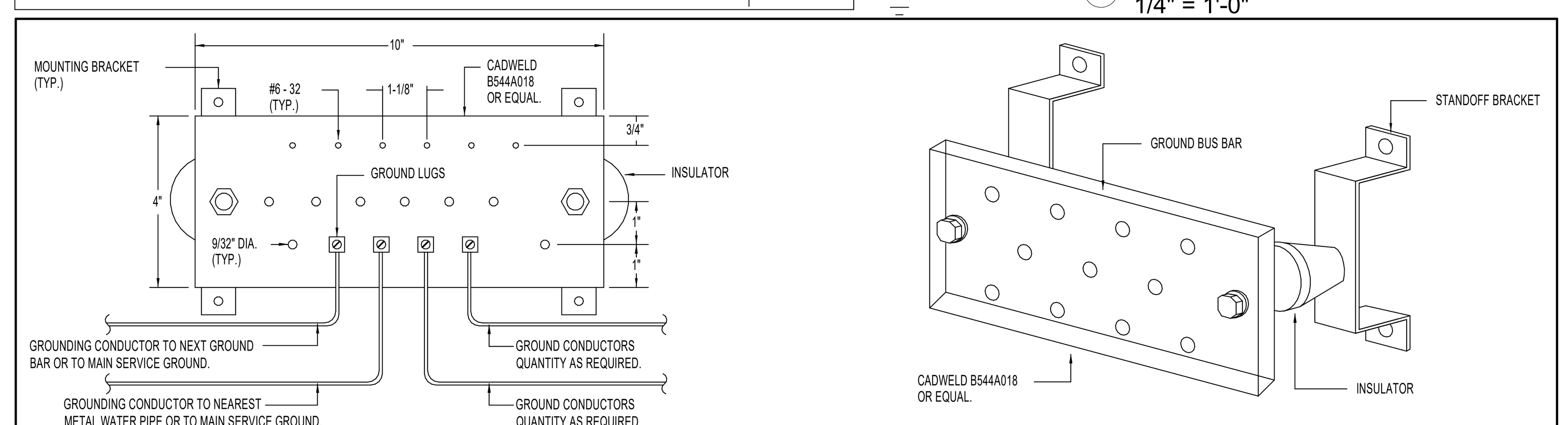

GROUND BUSS BAR DETAIL

NOT TO SCALE

SEAL

Sarasota ARCHITECTURE
Interior design inspections construction management
A K T M R Corporation company
1960 Stickney Point Road, Suite 201
Sarasota, Florida 34231 AR92053

(239) 443-6178 Cell
http://www.westcoastdrafting.com
West-Coast Drafting
- a drafting company - quality & accuracy -

REMODEL
1313 SE 47TH TER
CAPE CORAL FL 33904
STRAP: 07-45-24-C3-00360.0250
Folio ID: 10190045

BREWERY

SKYBAR AT 47TH LLC

TRUE
BUILDING

ISSUED FOR: *** CONCEPT ***

REVISIONS

MK	DESCRIPTION	DATE
No.	Description	Date

Project number: 23-2124.1
Project Issue Date: --
Project Status: CONCEPT

ELECTRICAL NOTES & SPECS - BREWERY

SHEET: 1 of 19

SHEET NUMBER
E-1.1
2. ELECTRICAL

NOTE: THESE PLANS ARE SCHEMATIC IN NATURE, IF A DISCREPANCY EXIST BETWEEN THE PLANS AND THE ACTUAL FIELD CONDITIONS, THE CONTRACTOR IS TO NOTIFY THE OWNER WITHIN 10 (TEN) DAYS. AFTER 10 DAYS, THE CONTRACTOR IS RESPONSIBLE FOR THE PROJECT IN ITS ENTIRETY.

M:\Dropbox\projects\23-2124 - 1313 SE 47th Ter - Anna\CAD FILES\47 TERR v8.rvt

LIGHT FIXTURE SCHEDULE BREWERY

Mark	Count	MFR.	LAMP	MOUNTING	Type	Apparent Load	Image	2D LEGEND
L1	21	BY OWNER	LED	SURFACE	8" LED- 120V	150 VA		
L2	11	Lithonia Lighting White LED Panel Light	LED	SURFACE	1'x4'(1 Lamp) - 120V	75 VA		
L5	1	Tech Lighting	LED		700OWCHA93026BUD UNVS	12 VA		

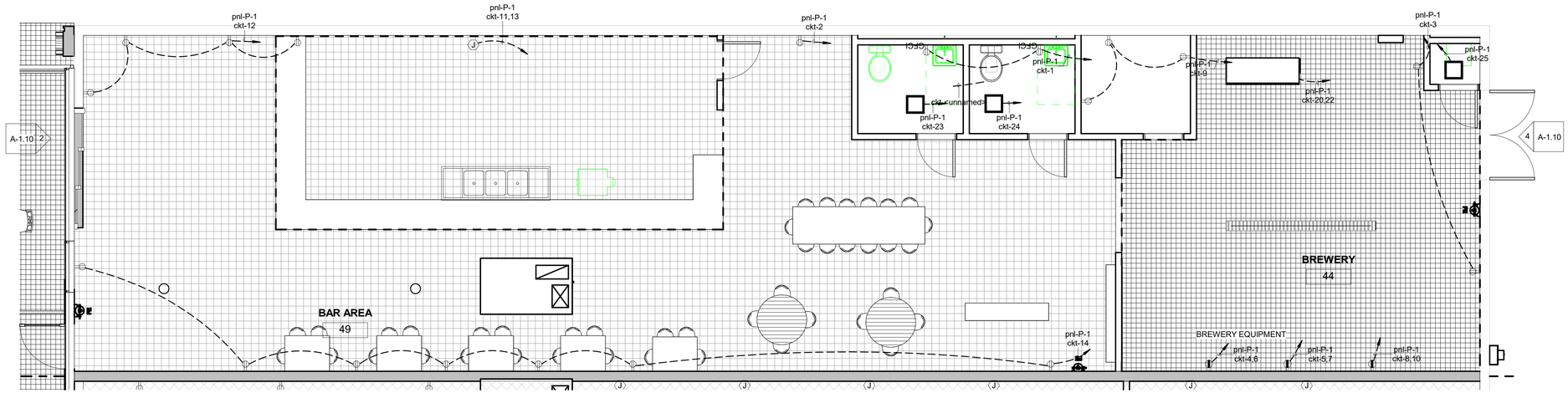

2 E-1.2 POWER FLOOR PLAN - BREWERY
1/4" = 1'-0"

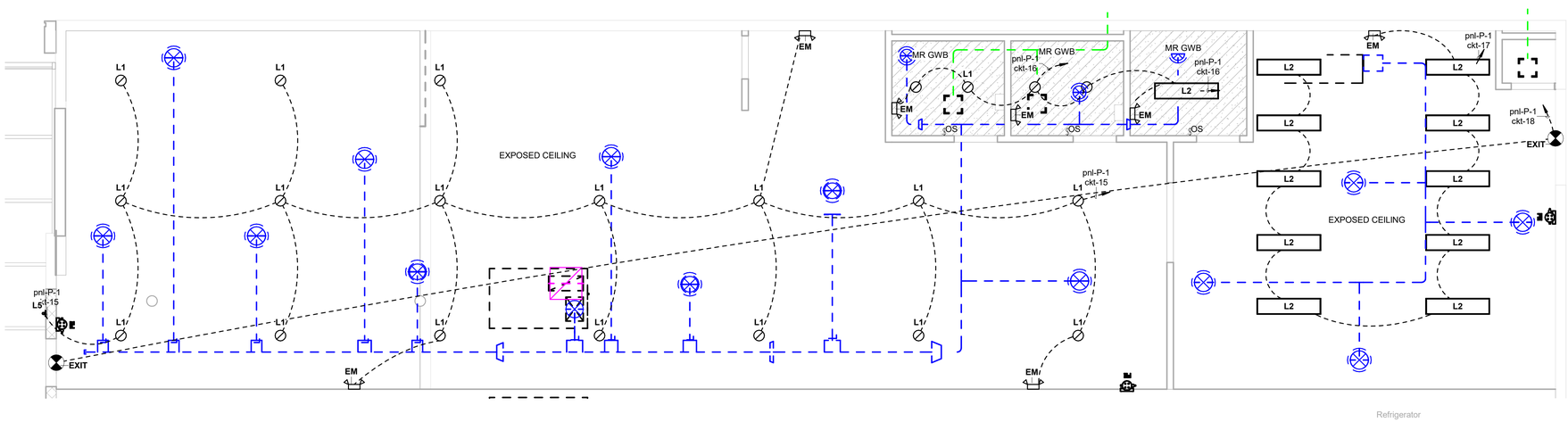

1 E-1.2 LIGHTING PLAN - BREWERY
1/4" = 1'-0"

SEAL

Sarasota ARCHITECTURE
Interior design inspections construction management
AKTMR Corporation company
11960 Stickney Point Road, Suite 201
Sarasota, Florida 34231 AR92053

(239) 443-6178 Cell
http://www.westcoastdrafting.com
West-Coast Drafting
- a drafting company - quality & accuracy -

REMODEL
1313 SE 47TH TER
CAPE CORAL FL 33904
STRAP: 07-45-24-C3-00360.0250
Folio ID: 10190045

BREWERY

SKYBAR AT 47TH LLC
TRUE
BUILDING

ISSUED FOR: *** CONCEPT ***

REVISIONS:

MK	DESCRIPTION	DATE
No.	Description	Date

Project number: 23-2124.1
Project Issue Date: --
Project Status: CONCEPT

PROPOSED ELECTRICAL PLAN - BREWERY

SHEET: 2 of 19

SHEET NUMBER
E-1.2
2. ELECTRICAL

NOTE: THESE PLANS ARE SCHEMATIC IN NATURE, IF A DISCREPANCY EXIST BETWEEN THE PLANS AND THE ACTUAL FIELD CONDITIONS, THE CONTRACTOR IS TO NOTIFY THE OWNER WITHIN 10 (TEN) DAYS. AFTER 10 DAYS, THE CONTRACTOR IS RESPONSIBLE FOR THE PROJECT IN ITS ENTIRETY.

1/10/2024 11:21:02 AM

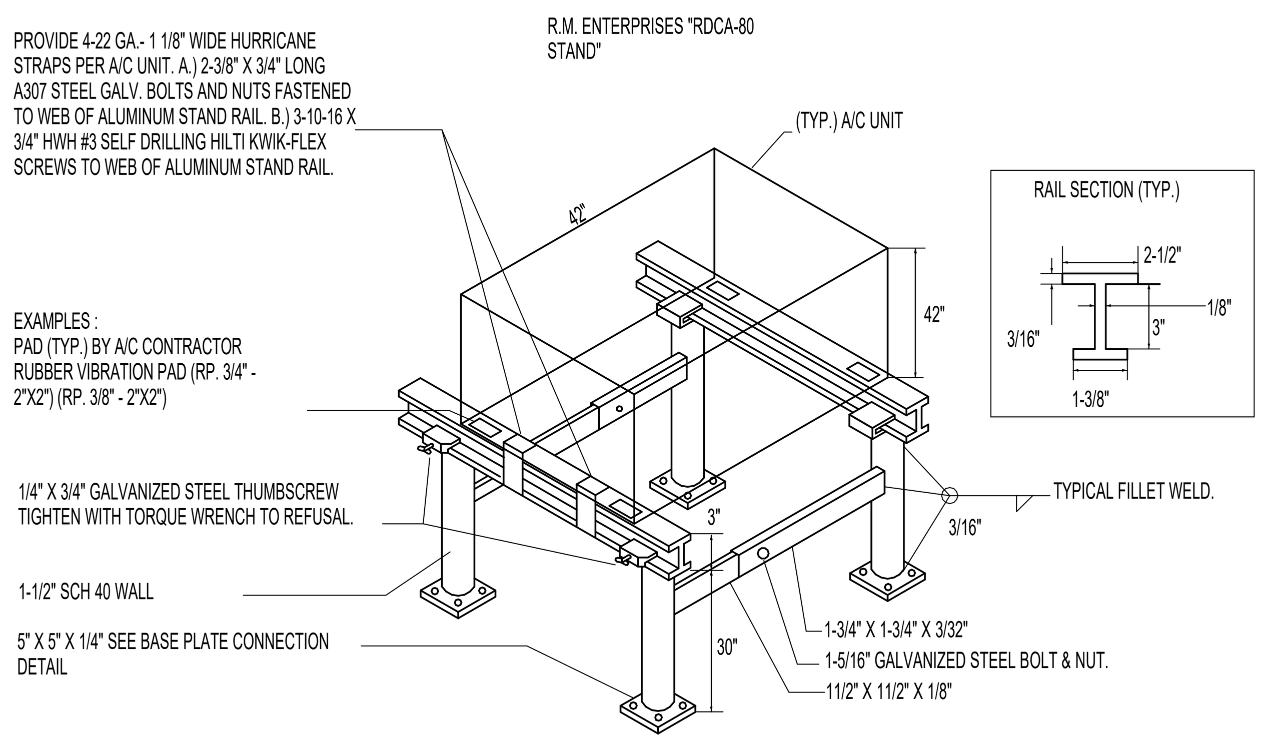

NOTES:
1. ALL CONSTRUCTION TO MEET ALUMINUM ASSOCIATION SPECIFICATIONS.
2. VIBRATION INSULATOR PADS SHALL BE PROVIDED BY THE A/C CONTRACTOR SO AS NOT TO CAUSE VIBRATION TO EXISTING SUB-STRUCTURE.
3. DRAWINGS ARE THE MAXIMUM THE STAND CAN BE BUILT.
4. STANDARD HEIGHT OF LEGS IS 18" AND A WIDTH OF 27" CENTER-TO-CENTER ON I-BEAM.

AC UNIT ROOF STAND

NOT TO SCALE

1. 2017 NEC - Section 210.63 Heating, Air-Conditioning, and Refrigeration Equipment Outlet. A 125-volt, single-phase, 15- or 20-ampere-rated receptacle outlet shall be installed at an accessible location for the servicing of heating, air-conditioning, and refrigeration equipment. The receptacle shall be located on the same level and within 7.5 m (25 ft) of the heating, air-conditioning, and refrigeration equipment. The receptacle outlet shall be located within the same room or area as the service equipment.
2. 2020 FMC Section 607.5.3 - Fire partitions
Ducts and air transfer openings that penetrate fire barriers shall be protected with listed fire dampers installed in accordance with their listing.

SYMBOLS & ABBREVIATIONS

Symbol	Meaning
	SUPPLY AIR GRILLE
	RETURN AIR GRILLE
	EXHAUST AIR GRILLE
12x12	RIGID RECTANGULAR AIR DUCT
6"Ø	RIGID ROUND AIR DUCT
6"Ø	FLEX DUCT
	LOUVER
	TURNING VANES
FD	FIRE DAMPER
	EXHAUST FAN
	MARK -TYPE | DIRECTION CFM
12x14	WIDTH X HEIGHT
12 / 14	WIDTH / HEIGHT

Abbreviation	Meaning
DS	DUCT SMOKE DETECTOR
DT	DUCT TEMP DETECTOR
PS	DUCT STATIC PRESSURE SENSOR
S	TEMPERATURE SENSOR
T	THERMOSTAT
C2	CO2 SENSOR
FD	FIRE DAMPER
FBC	FLORIDA BUILDING CODE
AHU	AIR HANDLER UNIT
CU	CONDENSING UNIT
RTU	ROOF TOP UNIT
EF	EXHAUST FAN
ERV	ENERGY RECOVERY VENTILATOR
MAU	MAKE-UP AIR UNIT
RTRN	RETURN
BOB	BOTTOM OF BEAM
CWS	CHILLED WATER SUPPLY
CWR	CHILLED WATER RETURN
DH	DUCT HEATER
VAV	VARIABLE AIR VOLUME
COND	CONDENSATE
OSA	OUTSIDE AIR

AIR DEVICE SCHEDULE

DESIGNATION	DESCRIPTION	MANUFACTURER MODEL NUMBER	AIR QUANTITY CFM	NECK SIZE	THROW DIRECTION	ACCESSORIES	REMARKS
CDX	CEILING SUPPLY DIFFUSER	TITUS	0-100	6"x6"/6" Ø	SEE PLANS	OBD	SEE NOTE 1
	LOUVERED 24x24 FACE,	TDC-AA	101-200	9"x9"/9" Ø	SEE PLANS		
	T-BAR LAY-IN INSTALLATION		201-250	12"x12"/10" Ø	SEE PLANS		
	ALUMINUM CONSTRUCTION		251-400	12"X12"/12" Ø	SEE PLANS		
CR1	CEILING RETURN GRILLE/REGISTER	TITUS	5 - 100	6"x6"/6" Ø	SEE PLANS	-	SEE NOTE 1
	EGGCRATE 24x24 FACE,	50F		9"x9"/9" Ø	SEE PLANS		
	T-BAR LAY-IN INSTALLATION			12"x12"/10" Ø	SEE PLANS		
	ALUMINUM CONSTRUCTION			12"X12"/12" Ø	SEE PLANS		
ER1	EXHAUST REGISTER	TITUS	5 - 100	6 x 6	-	-	SEE NOTE 1
	LOUVERED 3/4" BLADE SPACING	350FL					
	T-BAR LAY-IN INSTALLATION						
	STATIONARY, EXTRUDED ALUMINUM						
OAL	OUTDOOR AIR LOUVER	TITUS	120		-		SEE NOTE 1
	LOUVERED 3/4" BLADE SPACING	350FL					
	SURFACE MOUNT INSTALLATION						
	STATIONARY, EXTRUDED ALUMINUM						
EL1	EXHAUST AIR LOUVER	TITUS	50 - 75		-	I.S.	SEE NOTE 2
	LOUVERED 3/4" BLADE SPACING	350FL	100				
	SURFACE MOUNT INSTALLATION		150				
	STATIONARY, EXTRUDED ALUMINUM		175				

Notes
1. STANDARD WHITE FINISH, FINAL COLOR BY OWNER/ARCHITECT.
2. STANDARD MILL FINISH, FINAL COLOR BY OWNER/ARCHITECT.
3. CONCEALED MOUNTING

ACCESSORY ABBREVIATIONS:
O.B.D. = OPPOSED BLADE DAMPER
SQ.RD. = SQUARE NECK TO ROUND NECK TRANSITION
I.S. = INSECT SCREEN
D.F = DOUBLE FLANGED

EXHAUST FAN SCHEDULE

UNIT NUMBER	EF-1 (NEW)	EF-2 (NEW)	EF-3 (NEW)
SERVICE	TOILET	TOILET	UTIL
AIR QUANTITY - CFM	100	100	100
EXTERNAL STATIC PRESSURE - INCHES OF WATER	.375	.375	.375
FAN TYPE	CEILING EXHAUST	CEILING EXHAUST	CEILING EXHAUST
DRIVE TYPE	DIRECT	DIRECT	DIRECT
SOUND LEVEL (MAX) - SONES	2.0	2.0	2.0
MOTOR HP OR WATTS/AMPS	80/1.14	80/1.14	80/1.14
FAN SPEED (MAX) - RPM	--	--	--
ELECTRICAL DATA - VOLTAGE/PHASE	120/1PH	120/1PH	120/1PH
CONTROLS	INTERLOCK W/ LIGHT	INTERLOCK W/ LIGHT	INTERLOCK W/ LIGHT
WEIGHT - POUNDS	10.0	10.0	10.0
LOCATION	TOILET ROOM	TOILET ROOM	TOILET ROOM
MANUFACTURER	GREENHECK	GREENHECK	GREENHECK
MODEL NUMBER	SP-B110	SP-B110	SP-B110
REMARKS: - SEE NOTES	1, 2, 3, 4, 5, 6	1, 2, 3, 4, 5, 6	1, 2, 3, 4, 5, 6

NOTES:
1. PROVIDE WITH BACKDRAFT DAMPER
2. PROVIDE WITH PERMANENTLY LUBRICATED MOTOR WITH BUILT-IN THERMAL OVERLOAD PROTECTION & DISCONNECT PLUG.
3. PROVIDE WITH MANUFACTURER'S WHITE PLASTIC GRILLE.
4. PROVIDE WITH PREWIRED SOLID STATE FAN SPEED CONTROLLER.
5. PROVIDE WITH 0 TO 60 MINUTE TIME DELAY SWITCH, INTERLOCKED WITH ROOM LIGHT SWITCH.
6. PROVIDE THERMOSTAT TO ENERGIZE FAN TO MAINTAIN A ROOM SETPOINT OF 50 DEG. F. TO 85 DEG. F.

MECHANICAL NOTES - FBC, 7TH EDITION (2020)

THE MECHANICAL PLANS SHALL COMPLY WITH THE FLORIDA BUILDING CODE, 7TH EDITION (2020), INCLUDING ENERGY CONSERVATION AND ALL LOCAL CODES AS MAY BE APPLICABLE. SIX SHOP DRAWINGS SUBMITTALS OF ALL MAJOR EQUIPMENT SHALL BE REQUIRED FOR APPROVAL PRIOR TO ORDERING AND PROCUREMENT OF SAME.

A. THE HVAC CONTRACTOR SHALL INCLUDE THE FURNISHING OF ALL LABOR AND MATERIALS TO COMPLETE THE AIR CONDITIONING, HEATING, AND VENTILATING WORK AS SHOWN ON THE DRAWINGS TO INCLUDE, BUT NOT BE LIMITED TO THE FOLLOWING:

1. ALL PERMIT FEES
2. ALL AIR CONDITIONING EQUIPMENT
3. EXHAUST FANS AND SYSTEMS
4. MOTORS AND STARTERS FOR EQUIPMENT FURNISHED UNDER THIS WORK
5. SUPPLY AND RETURN DUCTWORK
6. SUPPLY AND RETURN AIR GRILLES, REGISTERS, WEATHERPROOF LOUVERS AND DAMPERS
7. FILTERS, DRIVES & STARTERS, ETC.
8. CONDENSATE DRAIN PIPING
9. CONTROLS INCLUDING THERMOSTATS AND LOW VOLTAGE WIRING
10. EQUIPMENT SUPPORTS, HANGERS, ETC.
11. TEST AND BALANCE OF ALL SYSTEMS

B. CONDENSATE PIPING

1. ALL AIR HANDLERS SHALL HAVE AUXILIARY DRAIN PANS WITH AUXILIARY DRAINS PIPED TO A CONSPICUOUS LOCATION AT THE EXTERIOR OF THE BUILDING. INSULATE CONDENSATE PIPE WITH 1/2" ARMAFLEX.

2. CONDENSATE AND EMERGENCY CONDENSATE DRAINS SHALL BE SCHEDULE 40 PVC ASTM 2665

3. SLOPE HORIZONTAL CONDENSATE DRAINS A MINIMUM OF 1/4" PER FOOT.

C. SUPPLY AND RETURN DUCTWORK

1. ALL CONCEALED DUCTWORK SHALL BE GALVANIZED SHEET METAL CONSTRUCTED AS PER THE LATEST SMACNA RECOMMENDATIONS, AS WELL AS ANY APPLICABLE LOCAL CODES, OR APPROVED EQUAL.

DUCTS AS FOLLOWS:

DUCT IDENTIFICATION	PRESS/VELOCITY CLASS	SEAL CLASS
VAV TRUNK MAINS:	3" W.G./"STV"	"B"
LOW VELOCITY DUCTS:	1" W.G./"STD"	"C"
OTHER RETURN/EXHAUST:	"STD"	"C"

ALL EXPOSED HEATING AND AIR CONDITIONING DISTRIBUTION DUCTWORK SHALL BE FABRICATED OF GALVANIZED SHEET ASTM A653/A924 DOUBLE WALL INSULATED SPIRAL DUCTWORK WITH A MINIMUM 1" THICKNESS GLASS FIBER EROSION RESISTANT INSULATION BETWEEN EACH WALL. DUCTWORK SHALL BE EQUAL TO LINDAB SAFE DUCT SYSTEM.

4. FLEXIBLE AIR DUCTS SHALL BE "WIREMOLD" TYPE WG, CLASS 1, AND U.L. LISTED, WITH SMOOTH GRAY POLYVINYL OVER 1 1/2" FIBERGLASS INSULATION. MAXIMUM LENGTH SHALL NOT EXCEED SIX (6) FEET MEASURED ALONG CENTERLINE OF DUCT AND DIFFUSERS SHALL HAVE METAL ELBOWS AND DROP CONNECTIONS. SECURE TO DUCT AND COLLARS WITH VENTLOCK #670 S.S. CLAMPS WITH WORM GEAR HEX HEAD SCREWS.

5. FLEXIBLE DUCT CONNECTORS TO EQUIPMENT SHALL BE "VENTGLAS", AS MANUFACTURED BY VENTFABRICS, INC., GLASS FIBER COATED WITH DU PONT NEOPRENE, FIRE RETARDANT, ACID AND FUME RESISTANT.

6. NON-PRETREATED OUTDOOR AIR INTAKE AND EXHAUST DUCT SHALL BE GALVANIZED SHEET METAL. NO INSULATION. PRE-TREATED OUTSIDE AIR SHALL BE INSULATED WITH R-4.2 IN CONDITIONED SPACES, AND R-6 FOR OUTSIDE AIR DUCTS ROUTED THROUGH UNCONDITIONED SPACES.

ALL SUPPLY COLLARS OFF MAIN TRUNK LINES SHALL HAVE MANUAL VOLUME DAMPERS. WHERE THE DAMPER IS NOT ACCESSIBLE, AN OPPOSED BLADE DAMPER OR BUTTERFLY DAMPER SHALL BE PROVIDED.

7. PROVIDE OPPOSED BLADE DAMPERS ON ALL SUPPLY AIR GRILLES. PROVIDE CABLE OPERATED BALANCING DAMPERS FOR NON-ACCESSIBLE GRILLES. SPIN-IN FITTINGS WITH DAMPERS ARE APPROVED TO SUBSTITUTE FOR AN OPPOSED BLADE DAMPER IF THE DAMPER IS MARKED AND ACCESSIBLE.

8. ALL OUTSIDE AIR CONNECTIONS TO EACH SYSTEM SHALL BE PROVIDED WITH A VOLUME DAMPER.

9. ALL SYSTEMS REQUIRING GREATER THAN 300 CFM OF OUTSIDE AIR SHALL BE EQUIPPED WITH A MOTORIZED DAMPER. ALL SYSTEMS REQUIRING LESS THAN 300 CFM OF OUTSIDE AIR SHALL BE EQUIPPED WITH A GRAVITY DAMPER.

10. AIR SYSTEMS CAPABLE OF SUPPLYING GREATER THAN 2000 CFM OF SUPPLY AIR SHALL BE EQUIPPED WITH A DUCT SMOKE DETECTOR ON THE SUPPLY SIDE OF THE UNIT. THE DUCT SMOKE DETECTOR SHALL SHUT THE UNIT DOWN AND NOTIFY OCCUPANTS. ALL DUCT SMOKE DETECTORS SHALL COMPLY WITH SECTION 606.4.1 FMC IN GENERAL. TEST STATIONS OR FIRE ALARM CONNECTIONS ARE NOT INDICATED ON DRAWINGS BUT SHALL BE PROVIDED AS REQUIRED.

D. EXHAUST SYSTEMS

1. EXHAUST OUTLETS FOR DUCTS CONVEYING NOXIOUS GASES, FLAMMABLE VAPORS, CORROSIVE VAPORS, AND DUCTS SERVING COMMERCIAL FOOD COOKING AND PROCESSING EQUIPMENT, SHALL TERMINATE OUTSIDE THE BUILDING AND SHALL BE LOCATED 10' FROM ANY ADJACENT BUILDING, PARKING AREA, ADJACENT PROPERTY LINE, WINDOW, DOOR OR AIR INTAKE OPENING AND SHALL BE LOCATED AT LEAST 10' ABOVE THE ADJOINING GRADE.

E. REFRIGERANT LINES

1. SIZE ALL REFRIGERANT LINES TO MEET THE MANUFACTURERS RECOMMENDATIONS.MAY REQUIRE LONG LINE ACCESSORIES. WHEN CONDENSING UNITS ARE INSTALLED ABOVE THE AIR HANDLER, THE REFRIGERANT LINES SHALL BE INSTALLED ACCORDING TO THE MANUFACTURERS RECOMMENDATIONS AND INSTALLED TO ENSURE OIL IS RETURNED BACK THE THE CONDENSING UNIT.

2. INSULATE ALL SUCTION LINES WITH 3/4" ARMAFLEX INSULATION, INSTALLED TO MEET THE MANUFACTURERS INSTRUCTIONS AND APPLICABLE ENERGY CODES.

3. ANY REFRIGERANT LINES RUNNING UNDERGROUND SHALL BE WITHIN A PVC PIPE CHASE.

F. CEILING AND WALL DIFFUSERS

1. ALL CEILING AND WALL SUPPLY AND RETURN AIR DIFFUSERS SHALL BE OF ALUMINUM CONSTRUCTION, EXCEPT WHEN PENETRATING A RATED WALL OR CEILING ASSEMBLY WHEN STEEL DIFFUSERS RATED FOR THE PARTICULAR APPLICATION ARE REQUIRED.

2. ALL AIR DISTRIBUTION SHALL BE EQUAL TO THAT INDICATED ON THE DRAWINGS.

3. CEILING AIR DEVICES ARE INDICATED ON THESE PLANS BASED ON OPTIMAL PERFORMANCE AND AIR DISTRIBUTION. REFER TO ARCHITECTURAL REFLECTED CEILING PLAN FOR EXACT LOCATION OF ALL OTHER CEILING DEVICE LOCATIONS. COORDINATE FINAL LOCATION WITH ALL OTHER TRADES AND CEILING MOUNTED DEVICES.

G. THERMOSTATS

1. EACH AIR CONDITIONING SYSTEM SHALL HAVE A 24 VOLT THERMOSTAT MOUNTED AT 4'-0" ABOVE FINISHED FLOOR. THERMOSTATS SHALL BE ONE STAGE COOL, ONE STAGE HEAT, WITH "AUTO-ON" FAN SWITCH AND "HEAT-OFF COOL" SYSTEM SWITCH. PROVIDE TWO STAGE COOL AND TWO STAGE HEAT THERMOSTATS FOR TWO STAGE UNITS, WHERE REQUIRED. PROVIDE LISTED THERMOSTATS THAT ARE SHOWN ON THE EQUIPMENT SCHEDULE.

2. HVAC CONTRACTOR SHALL FURNISH AND INSTALL ALL CONTROL WIRING AND CONDUIT AS REQUIRED.

H. TESTING AND BALANCING

1. HVAC SUBCONTRACTOR SHALL PROVIDE AN INDEPENDENT (NOT EMPLOYED BY THE SUBCONTRACTOR) TEST AND BALANCE FIRM WHICH SPECIALIZES IN THE BALANCING AND TESTING OF HEATING, VENTILATING, AND AIR CONDITIONING SYSTEMS. THEY SHALL BALANCE AND ADJUST AIR MOVING EQUIPMENT AND AIR DISTRIBUTION AND EXHAUST SYSTEMS TO THE FLOW RATES INDICATED ON THE HVAC SCHEDULES AND PLANS. REPORTS SHALL BE ON STANDARD SMACNA OR ASSOCIATED AIR BALANCE COUNCIL FORMS AND SUBMITTED TO THE ARCHITECT/ENGINEER PRIOR TO APPLICATION FOR FINAL PAYMENT.

2. TESTING AND BALANCE PERSONNEL SHALL BE APPROVED BY THE OWNER'S REPRESENTATIVE AND SHALL BE NEEB CERTIFIED AND SHALL PROVIDE PROOF OF HAVING SUCCESSFULLY COMPLETE AT LEAST FIVE (5) PROJECT OF SIMILAR SIZE AND SCOPE.

3. AIR BALANCE TESTING SHALL NOT BEGIN UNTIL SYSTEMS HAVE BEEN COMPLETED AND ARE IN FULL WORKING ORDER. THE HVAC CONTRACTOR SHALL MAKE ALL PRELIMINARY TESTS AND ADJUSTMENTS, SHALL PLACE ALL SYSTEMS AND EQUIPMENT INTO FULL OPERATION AND CONTINUE THE OPERATION DURING EACH WORKING DAY OF THE TESTING AND BALANCING.

4. INCLUDE AN EXTENDED WARRANTY OF TWELVE (12) MONTHS AFTER COMPLETION OF THE TEST AND BALANCE WORK, DURING WHICH TIME, REQUESTS MAY BE MADE TO RECHECK, OR FOR RESETTING OF ANY OUTLETS, SUPPLY FAN, OR EXHAUST AS LISTED IN THE TEST REPORT. PROVIDE ANY TECHNICIANS TO ASSIST IN MAKING ANY TEST REQUIRED. IF SYSTEM IS NOT WORKING PROPERLY, IT SHALL BE REBALANCED ANY TIME DURING THE FIRST YEAR OF OPERATION. AFTER THE SPACE IS OCCUPIED, ADDITIONAL BALANCING WILL BE REQUIRED TO ACCOMMODATE THE ACTUAL OCCUPANCY REQUIREMENTS. ALSO, PROVIDE FOR BALANCING DURING WINTER OR SUMMER OPERATION. ALL OF THE ABOVE SHALL BE PROVIDED AT NO ADDITIONAL COST TO THE OWNER. REPLACEMENT OF ADJUSTABLE PULLEYS, ADDITIONAL BALANCING DAMPERS, PRESSURE PORTS, AND FITTINGS, ETC., REQUIRED TO EFFECT PROPER AIR BALANCE SHALL BE FURNISHED AND INSTALLED BY THE HVAC SUBCONTRACTOR AT NO ADDITIONAL COST TO THE OWNER.

5. THE FINAL TEST AND BALANCE REPORT FURNISHED TO THE GENERAL CONTRACTOR SHALL INCLUDE A LIST OF ITEMS THAT REQUIRE REPAIR OR ADJUSTMENT.

6. ALL AIR FILTERS AND STRAINERS SHALL BE CLEANED OR REPLACED BY THE HVAC SUBCONTRACTOR BEFORE PROCEEDING WITH THE TEST AND BALANCE.

7. ALL PROGRAMMABLE THERMOSTATS SHALL BE SET SO THAT THE BLOWER OPERATES CONTINUOUSLY DURING ALL OCCUPIED TIMES TO INSURE THE PROPER AMOUNT OF VENTILATION AIR IS PROVIDED. THE BLOWER SHALL BE SET IN THE AUTO POSITION FOR ALL UNOCCUPIED PERIODS.

ANY DEVIATIONS FROM PLANS TO BE FULLY DOCUMENTED, THE CONTRACTOR SHALL TURN OVER AS-BUILT DOCUMENTS TO THE ARCHITECT AT THE COMPLETION OF THE PROJECT.

NOTICE TO CONTRACTOR: REVISIONS TO THESE DRAWINGS AND CERTIFICATION THERETO WHICH MAY BE REQUIRED BECAUSE OF CONTRACTOR OPTED REVISIONS, SHALL BE COMPENSATED TO THE ENGINEER BY THE REQUESTING CONTRACTOR. PAYMENT SHALL BE REQUIRED AT THE TIME OF CERTIFICATION DELIVERY.

THE DESIGN PROFESSIONAL WAIVES ANY AND ALL RESPONSIBILITY AND LIABILITY FOR PROBLEMS WHICH ARISE FROM FAILURE TO FOLLOW THESE PLANS, SPECIFICATIONS AND THE DESIGN INTENT THEY CONVEY, OR FOR PROBLEMS WHICH ARISE FROM OTHERS' FAILURE TO OBTAIN AND/OR FOLLOW THE DESIGN PROFESSIONAL'S GUIDANCE WITH RESPECT TO ANY ERRORS, OMISSIONS, INCONSISTENCIES, AMBIGUITIES OR CONFLICTS WHICH ARE ALLEGED.

LIMITED ENGINEERING FIELD INVESTIGATIONS HAVE BEEN CONDUCTED (AS AND AID TO THE CONTRACTOR), TO ILLUSTRATE EXISTING CONDITIONS. THIS DOES NOT RELIEVE THE CONTRACTOR OF THE RESPONSIBILITY TO CONDUCT HIS OWN PERSONAL FIELD INVESTIGATION, WHICH MAY UNCOVER ADDITIONAL CONDITIONS, THUS IMPACTING THE INSTALLATION OF THE MECHANICAL WORK INDICATED ON THESE PLANS, RELOCATION OF EQUIPMENT MAY BE REQUIRED DUE TO FIELD CONDITIONS AND ALL OFFSETS, EXTENSIONS OR ADDED MATERIAL MAY BE REQUIRED TO MAKE THE MECHANICAL SYSTEMS COMPLETE AND OPERATIONAL AS INTENDED.

SEAL

Sarasota ARCHITECTURE
Interior design inspections construction management
AKTMR Corporation company
1960 Stickney Point Road, Suite 201
Sarasota, Florida 34231 AR92053

(239) 443-6178 Cell
http://www.westcoastdrafting.com
West-Coast Drafting
- a drafting company - quality & accuracy -

REMODEL
1313 SE 47TH TER
CAPE CORAL FL 33904
STRAP: 07-45-24-C3-00360.0250
Folio ID: 10190045

BREWERY

SKYBAR AT 47TH LLC

TRUE / BUILDING

ISSUED FOR: *** CONCEPT ***

REVISIONS

MK	DESCRIPTION	DATE
No.	Description	Date

Project number: 23-2124.1
Project Issue Date: --
Project Status: CONCEPT

MECHANICAL NOTES AND SCHEDULES- -BREWERY

SHEET: 1 of 19

SHEET NUMBER
M-1.1
3. MECHANICAL

NOTE: THESE PLANS ARE SCHEMATIC IN NATURE, IF A DISCREPANCY EXIST BETWEEN THE PLANS AND THE ACTUAL FIELD CONDITIONS, THE CONTRACTOR IS TO NOTIFY THE OWNER WITHIN 10 (TEN) DAYS. AFTER 10 DAYS, THE CONTRACTOR IS RESPONSIBLE FOR THE PROJECT IN ITS ENTIRETY.

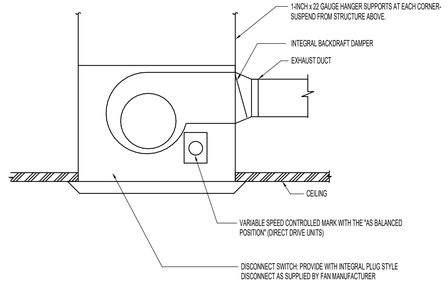

CEILING MOUNTED EXHAUST FAN DIAGRAM

NOT TO SCALE

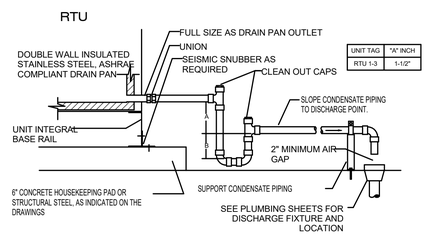

UNIT TAG	"A" INCH
RTU 1-3	1-1/2"

1. PROVIDE SCH 40 PVC CONDENSATE DRAIN PIPING.
2. MINIMUM SIZE OF CONDENSATE PIPING SHALL BE 1-1/4".
3. INSULATE CONDENSATE PIPING PER SPECIFICATIONS.
4. B = (A/2) + 1".
   THE "A" DIMENSION IS AS INDICATED IN THE ADJACENT TABLE.

CONDENSATE DRAIN P-TRAP DETAIL

NOT TO SCALE

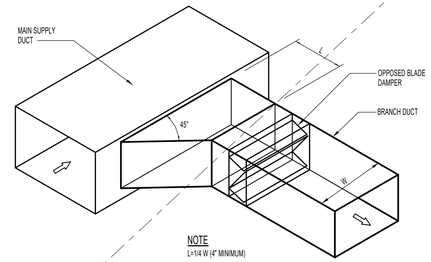

SUPPLY BRANCH DUCT DETAIL

NOT TO SCALE

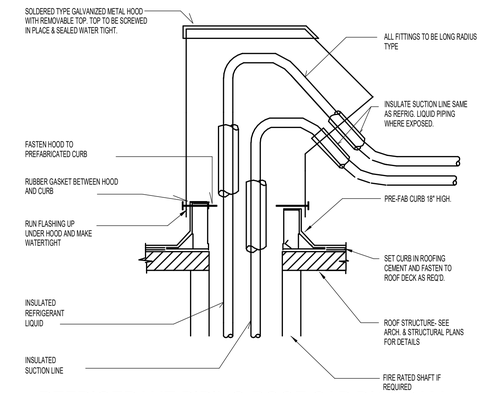

REFRIGERANT PIPING ROOF CAP DIAGRAM

NOT TO SCALE

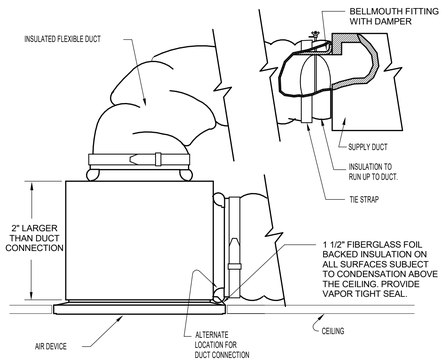

FLEXIBLE DUCT CONNECTION DETAIL

NOT TO SCALE

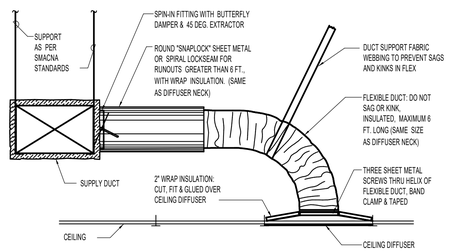

SUPPLY CEILING DIFFUSER RUNOUT DETAIL

NOT TO SCALE

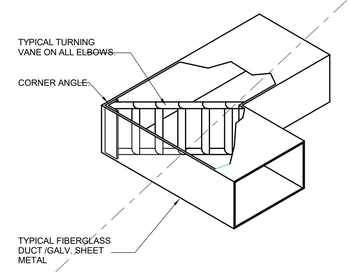

ELBOW TURNING VANE DETAIL

NOT TO SCALE

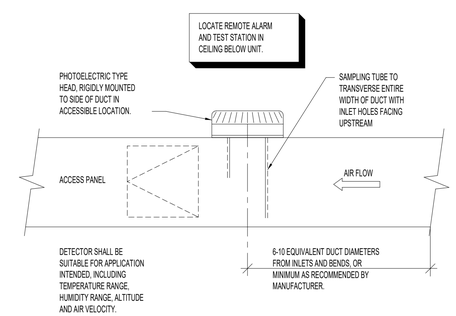

DUCT MOUNTED SMOKE DETECTOR DIAGRAM

NOT TO SCALE

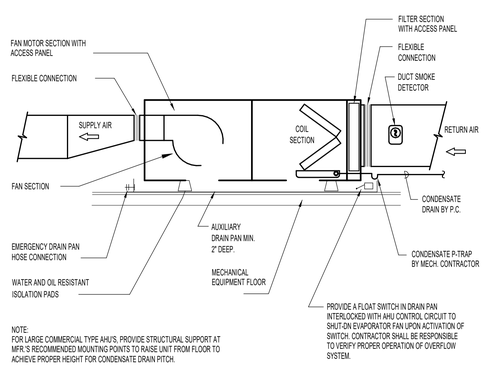

NOTE:
FOR LARGE COMMERCIAL TYPE AHU'S, PROVIDE STRUCTURAL SUPPORT AT MFR.'S RECOMMENDED MOUNTING POINTS TO RAISE UNIT FROM FLOOR TO ACHIEVE PROPER HEIGHT FOR CONDENSATE DRAIN PITCH.

HORIZONTAL AIR HANDLER UNIT DIAGRAM

NOT TO SCALE

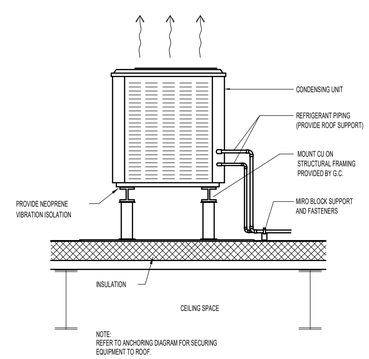

NOTE:
REFER TO ANCHORING DIAGRAM FOR SECURING EQUIPMENT TO ROOF.

ROOF MOUNTED CU DIAGRAM

NOT TO SCALE

SEAL

Sarasota ARCHITECTURE
Interior design inspections construction management
AKTMR Corporation company
1960 Stickney Point Road, Suite 201
Sarasota, Florida 34231 AR92053

(239) 443-6178 Cell
http://www.westcoastdrafting.com
West-Coast Drafting
- a drafting company - quality & accuracy -

REMODEL
1313 SE 47TH TER
CAPE CORAL FL 33904
STRAP: 07-45-24-C3-00360.0250
Folio ID: 10190045

BREWERY

SKYBAR AT 47TH LLC

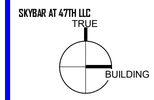

ISSUED FOR: *** CONCEPT ***

REVISIONS:

MK	DESCRIPTION	DATE
No.	Description	Date

Project number: 23-2124.1
Project Issue Date: --
Project Status: CONCEPT

MECHANICAL NOTES AND DETAILS - BREWERY

SHEET: 2 of 19

SHEET NUMBER
M-1.2

3. MECHANICAL

NOTE: THESE PLANS ARE SCHEMATIC IN NATURE, IF A DISCREPANCY EXIST BETWEEN THE PLANS AND THE ACTUAL FIELD CONDITIONS, THE CONTRACTOR IS TO NOTIFY THE OWNER WITHIN 10 (TEN) DAYS. AFTER 10 DAYS, THE CONTRACTOR IS RESPONSIBLE FOR THE PROJECT IN ITS ENTIRETY.

1/10/2024 9:32:2 AM

M:\Dropbox\projects\23-2124 - 1313 SE 47th Ter - Anna\CAD\REVS v7 TERR.dwg

PLAN KEYNOTES

Key Value	Keynote Text

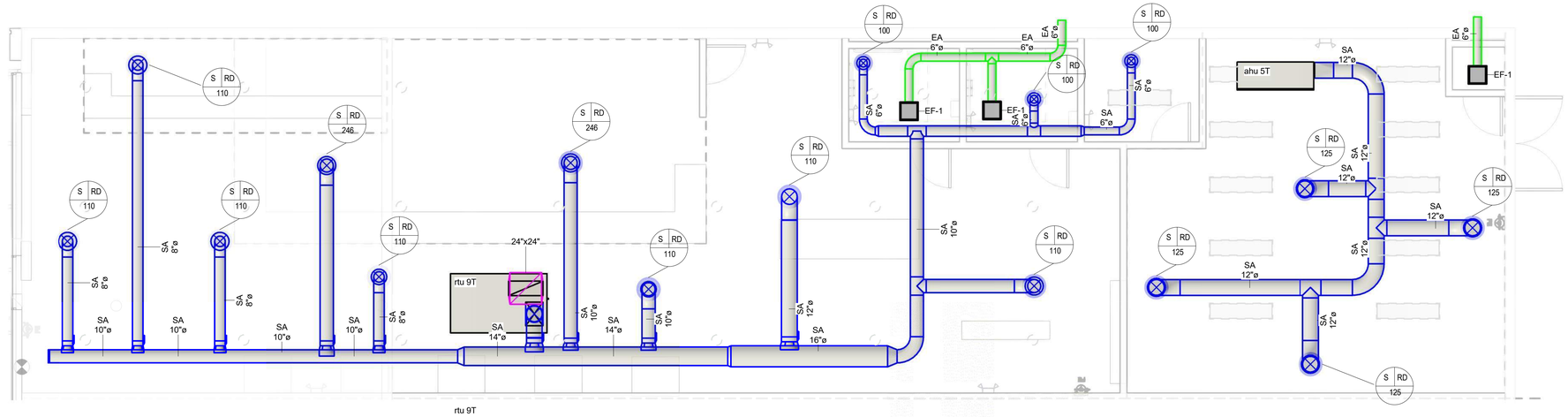

rtu 9T

1 M-1.3 **PROPOSED MECHANICAL PLAN**
1/4" = 1'-0"

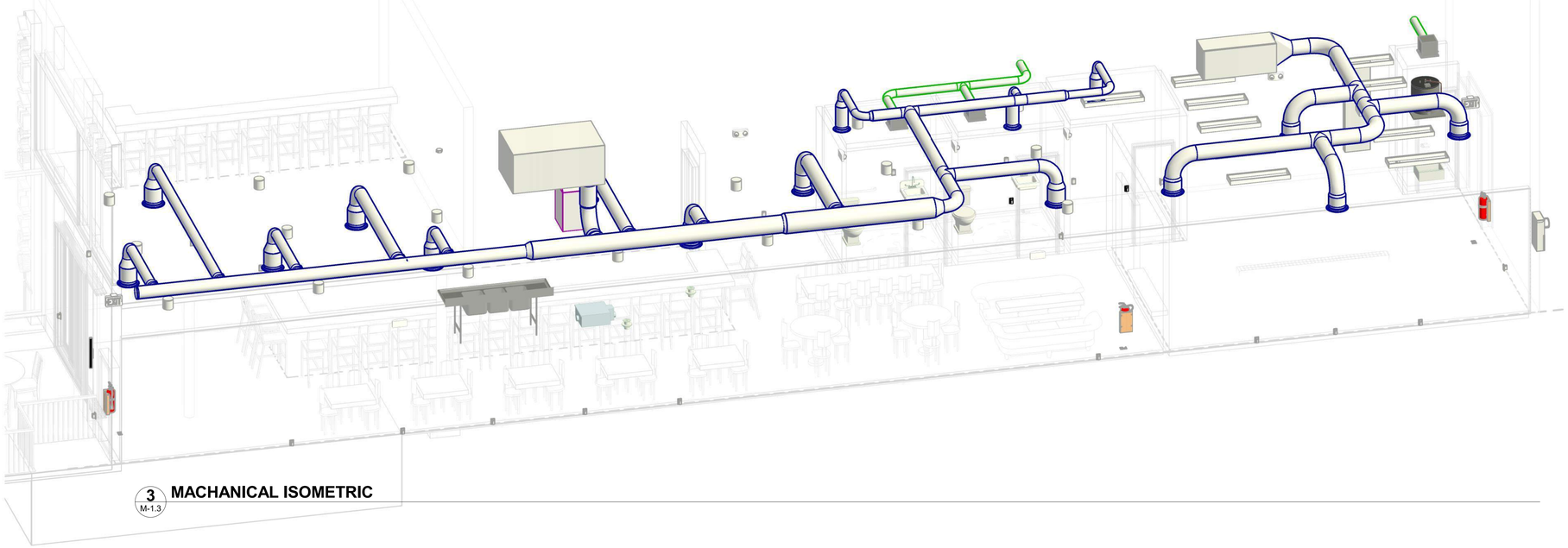

3 M-1.3 **MACHANICAL ISOMETRIC**

SEAL

Sarasota ARCHITECTURE
Interior design inspections construction management
A K T M R Corporation company
11960 Stickney Point Road, Suite 201
Sarasota, Florida 34231 AR92053

(239) 443-6178 Cell
http://www.westcoastdrafting.com
West-Coast Drafting
- a drafting company - quality & accuracy -

REMODEL
1313 SE 47TH TER
CAPE CORAL FL 33904
STRAP: 07-45-24-C3-00360.0250
Folio ID: 10190045

BREWERY

SKYBAR AT 47TH LLC
TRUE
BUILDING

ISSUED FOR: *** CONCEPT ***

REVISIONS:

MK	DESCRIPTION	DATE
No.	Description	Date

Project number: 23-2124.1
Project Issue Date: --
Project Status: CONCEPT

PROPOSED MECHANICAL PLAN - BREWERY

SHEET: 3 of 19

SHEET NUMBER
M-1.3
3. MECHANICAL

NOTE: THESE PLANS ARE SCHEMATIC IN NATURE, IF A DISCREPANCY EXIST BETWEEN THE PLANS AND THE ACTUAL FIELD CONDITIONS, THE CONTRACTOR IS TO NOTIFY THE OWNER WITHIN 10 (TEN) DAYS. AFTER 10 DAYS, THE CONTRACTOR IS RESPONSIBLE FOR THE PROJECT IN ITS ENTIRETY.

1/10/2024 9:33:08 AM

M:\Dropbox\projects\23-2124 - 1313 SE 47th Ter - Anna\CAD FILES\47 TERR v5.rvt

MAXIMUM ALLOWABLE WATER USAGE FOR PLUMBING FIXTURES

SEE NOTE (1)

FIXTURE	VOLUME (GALLONS)	PER UNITS	SEE NOTE BELOW
WATER CLOSETS			
FLUSHOMETER TANK OR CLOSE-COUPLED 2-PIECE GRAVITY-FLUSH TYPE	1.6	FLUSH	(5)
ONE-PIECE	1.6	FLUSH	
NON-RESIDENTIAL APPLICATION	3.5	FLUSH	
URINAL	1.0	FLUSH	
FAUCETS			
RESIDENTIAL SINK OR LAVATORY	2.2	MINUTE	(6)
PUBLIC - NON-METERING TYPE	0.5	MINUTE	
PUBLIC - METERING TYPE	0.25	CYCLE	(2)
SHOWER HEADS	2.5	MINUTE	(3) (4)

1.0 GALLONS = 3.7854 LITERS

1.0 GALLONS PER MINUTE = 0.0631 LITERS PER SECOND

NOTES

1. MAXIMUM ALLOWABLE WATER USAGE FOR PLUMBING FIXTURES AND FIXTURE FITTING NOT LISTED IN THIS TABLE SHALL CONFORM TO THE APPLICABLE ANSI STANDARD LISTED IN TABLE 405. BLOWOUT FIXTURES, PANELWEAR, CLINIC SINKS AND SERVICE SINKS SHALL BE EXEMPTED FROM THESE LIMITATIONS.
2. LAVATORY FAUCETS SHALL BE OF THE METERING TYPE WHEN LOCATED IN THE FOLLOWING PUBLIC RESTROOMS: A. ALL OCCUPANCIES IN RESTROOMS WHICH HAVE SIX OR MORE LAVATORIES
   B. SCHOOL OCCUPANCIES IN STUDENT-USE RESTROOMS
   C. ASSEMBLY OCCUPANCIES IN ALL CUSTOMER OR PUBLIC-USE RESTROOMS
3. SHOWERHEAD FLOW RATE AS TESTED A T 80 PSI (552 kPA) IN ACCORDANCE WITH ANSI STANDARD A112.18.1M.
4. SPECIAL PURPOSE SAFETY SHOWERS ARE EXEMPTED FROM MAXIMUM FLOW RATE LIMITATIONS.
5. AVERAGE WATER CONSUMPTION FOR LOW CONSUMPTION WATER CLOSETS OVER A RANGE OF TEST PRESSURES SHALL NOT EXCEED 1.6 GPF. THE CONSUMPTION SHALL NOT EXCEED 2.0 GPG AT ANY ONE TEST PRESSURE.
6. MEASURED AT 60 P.S.I.

PLUMBING FIXTURE SCHEDULE

(LISTED MANUFACTURER OR APPROVED EQUAL)

MARK	FIXTURE	MANUFACTURER / MODEL	MATERIAL	ACCESSORIES	CW	HW	TRAP	SAN	NOTES
WC-1	WATER CLOSET (TANK) ADA-COMPLIANT	ELONGATED WATER SAVER #K-3493 HIGHLINE	VITREOUS CHINA	SEAT : FRENCH CURVE OPEN FRONT - #K-4650 - SUPPLY PIPE & 2 LUGS	1/2"	--	INTEGRAL	3"	1, 2
WC-2	WATER CLOSET (TANK)	ELONGATED WATER SAVER #K-3427 HIGHLINE	VITREOUS CHINA	SEAT : FRENCH CURVE OPEN FRONT - #K-4653 -SUPPLY PIPE & 2 LUGS	1/2"	--	INTEGRAL	3"	1, 2
L-1	LAVATORY WALL-HUNG ADA-COMPLIANT	GREENWICH #K-2030	VITREOUS CHINA	FAUCET : FINESSE #K-7443-5A HANDLES: #K-13012 WRIST BLADE	1/2"	1/2"	1-1/2"	2"	1, 2, 3
L-2	LAVATORY COUNTERTOP	CAXTON #K-2210	VITREOUS CHINA	FAUCET : FINESSE #K-7443-5A HANDLES: #K-16012-5 WRIST BLADE	1/2"	1/2"	1-1/2"	2"	1, 2
UR-1	URINAL	BARDON WASHOUT DESIGN #K-4960-T	VITREOUS CHINA	VALVE : SLOAN ROYAL 186	3/4"	--	INTEGRAL	2"	1, 2
SK-1	SINK KITCHEN	TWO-BOWL, SELF-RIMMING ELKAY: EG3322	STAINLESS STEEL	FAUCET: ELKAY: LKD2437BH ACCESS: PROFLO: PF1435SS	1/2"	1/2"	1-1/2"	2"	1, 2
SK-2	SINK HAND	SINGLE-BOWL, SELF-RIM ELKAY: LRAD1517	STAINLESS STEEL	FAUCET: PROFLO: PFLL336M	1/2"	1/2"	1-1/2"	2"	1, 2
MS-1	SERVICE BASIN MOP	PROFLO: PFZ199624	HIGH DENSITY COMPOSITE	FAUCET: PROFLO: PF1118 ACCESS: PROFLO: PF245 HANGER	1/2"	1/2"	3"	3"	1, 2
SH-1	SHOWER VALVE & FAUCET	MOEN: POSI TEMP VALVE	HIGH DENSITY COMPOSITE	FAUCET: MOEN: T5152 W/ 3867 HAND SHOWER W/ SLIDE BAR DRAIN: PROFLO: PF101PNC	1/2"	1/2"	1-1/2"	2"	1, 2
FCO	CLEANOUT (FLOOR)	ZURN #Z1400	DURA COATED CAST IRON BODY	--	--	--	--	PIPE SIZE	--
WCO	CLEANOUT (WALL)	ZURN #Z-1441	NICKEL/BRASS	--	--	--	--	PIPE SIZE	--

ALL PLUMBING FIXTURES, COLORS, AND FINISHES TO BE SELECTED BY OWNER OR COORDINATED BY INTERIOR DESIGNER, OWNER, AND/OR ARCHITECT.

NOTES:

1. FINAL FIXTURE COLOR SELECTION BY INTERIOR DESIGNER OR OWNER
2. TRAPS, FITTINGS, AND ACCESSORIES SHALL BE CHROME (NO PVC)
3. PROVIDE WITH FLOOR-MOUNT CONCEALED ARM CARRIER SUPPORT. SMITH, ZURN, OR APPROVED EQUAL

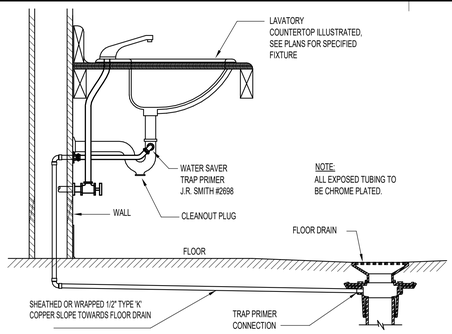

TRAP PRIMER PIPING DIAGRAM

NOT TO SCALE

HANGER ROD SCHEDULE			
PIPE SIZE	ROD SIZE	PIPE SIZE	ROD SIZE
UP TO 2"	3/8" DIA.	4" THRU 6"	5/8" DIA.
2" TO 3"	1/2"	6" THRU 12"	7/8" DIA.

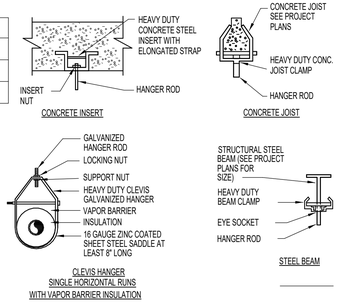

PIPE SUPPORT DIAGRAM

NOT TO SCALE

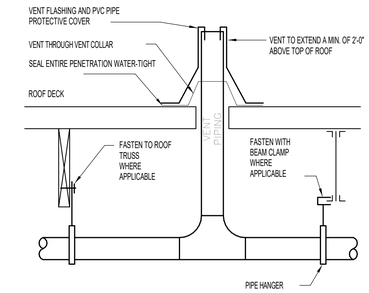

VENT THROUGH ROOF DIAGRAM

NOT TO SCALE

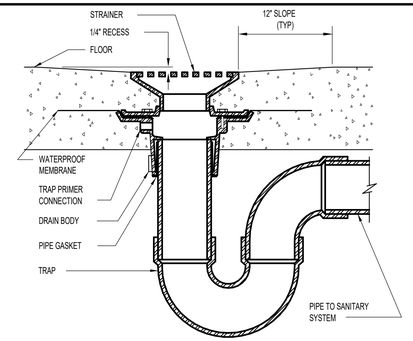

INTERIOR FLOOR DRAIN DIAGRAM

NOT TO SCALE

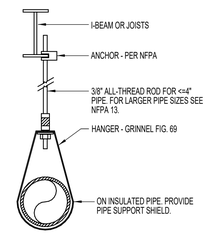

PIPE HANGER DIAGRAM

NOT TO SCALE

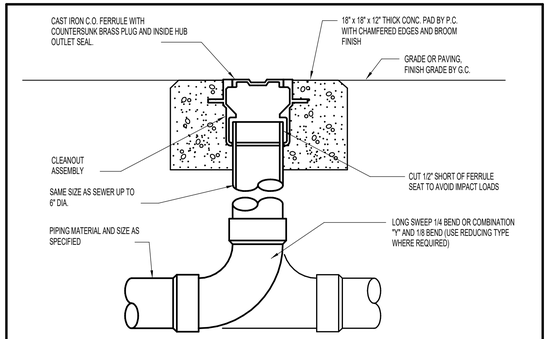

TYPICAL EXTERIOR CLEAN-OUT DIAGRAM

NOT TO SCALE

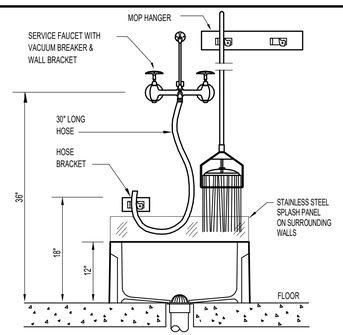

JANITOR MOP SINK DIAGRAM

NOT TO SCALE

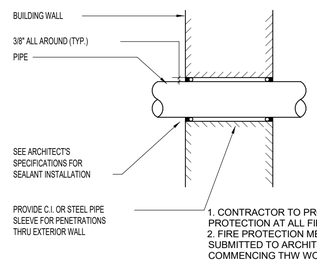

1. CONTRACTOR TO PROVIDE FIRE PROTECTION AT ALL FIRE RATED OPENINGS.
2. FIRE PROTECTION METHODS ARE TO BE SUBMITTED TO ARCHITECT PRIOR TO COMMENCING THW WORK.

PIPE SLEEVE DIAGRAM

NOT TO SCALE

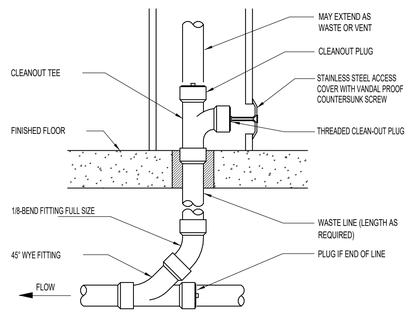

WALL CLEAN-OUT DIAGRAM

NOT TO SCALE

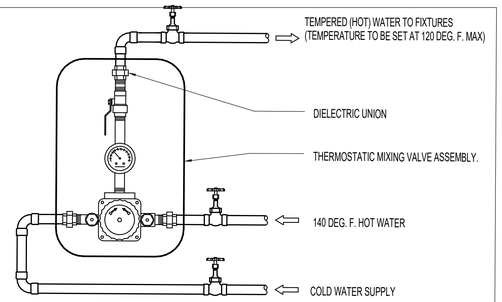

MIXING VALVE DETAIL

NOT TO SCALE

SEAL

Sarasota ARCHITECTURE
Interior design inspections construction management
AKTMR Corporation company
1960 Stickney Point Road, Suite 201
Sarasota, Florida 34231 AR92053

(239) 443-6178 Cell
http://www.westcoastdrafting.com
West-Coast Drafting
- a drafting company - quality & accuracy -

REMODEL
1313 SE 47TH TER
CAPE CORAL FL 33904
STRAP: 07-45-24-C3-00360.0250
Folio ID: 10190045

BREWERY

SKYBAR AT 47TH LLC

TRUE BUILDING

ISSUED FOR: *** CONCEPT ***

REVISIONS

MK	DESCRIPTION	DATE
No.	Description	Date

Project number: 23-2124.1
Project Issue Date: --
Project Status: CONCEPT

PLUMBING NOTES & DETAILS - BREWERY

SHEET: 1 of 19

SHEET NUMBER

P-1.1

4. PLUMBING

NOTE: THESE PLANS ARE SCHEMATIC IN NATURE, IF A DISCREPANCY EXIST BETWEEN THE PLANS AND THE ACTUAL FIELD CONDITIONS, THE CONTRACTOR IS TO NOTIFY THE OWNER WITHIN 10 (TEN) DAYS. AFTER 10 DAYS, THE CONTRACTOR IS RESPONSIBLE FOR THE PROJECT IN ITS ENTIRETY.

1/10/2024 9:33:18 AM

M:\Dropbox\projects\23-2124 - 1313 SE 47th Ter - Aeva\CAD FILES\AT\TBR-R.rvt

GENERAL PLUMBING NOTES

1. THE ENTIRE INSTALLATION, INCLUDING BUT NOT LIMITED TO WORKMANSHIP & MATERIAL, SHALL BE IN ACCORDANCE WITH THE LATEST EDITION OF THE FLORIDA BUILDING CODE& FLORIDA PLUMBING CODE,AND THE LATEST EDITIONS OF ALL LOCAL CODES, RULES, & AUTHORITIES HAVING JURISDICTION.
2. CONTRACTOR SHALL PROVIDE WRITTEN GUARANTEE OF ALL MATERIALS & WORKMANSHIP FREE FROM DEFECTS FOR A PERIOD OF NOT LESS THAN ONE (1) YEAR FROM DATE OF ACCEPTANCE BY OWNER. CORRECTION OF ANY DEFECTS SHALL BE COMPLETED WITHOUT ADDITIONAL CHARGE & SHALL INCLUDE REPLACEMENT OR REPAIR PARTS OR EQUIPMENT.
3. CONTRACTOR SHALL VISIT THE JOB SITE & THOROUGHLY FAMILIARIZE HIMSELF WITH ALL EXISTING CONDITIONS PRIOR TO BIDDING/BEGINNING ANY WORK & SHALL ADVISE ARCHITECT/ENGINEER OF ANY CONDITIONS WHICH MODIFY THE SCOPE OF WORK AS SHOWN ON THE DOCUMENTS. SUBMISSION OF A BID PROPOSAL WILL BE CONSTRUED AS EVIDENCE THAT SUCH AN EXAMINATION HAS BEEN MADE & LATER CLAIMS FOR MOBILIZATION, LABOR, EQUIPMENT, AND/OR MATERIALS REQ'D BECAUSE OF DIFFICULTIES ENCOUNTERED WILL NOT BE RECOGNIZED.
4. ALL MATERIALS SHALL BE NEW & BEAR UNDERWRITER'S LABEL (UL) WHERE APPLICABLE.
5. ALL WORK SHALL BE PERFORMED BY A LICENSED PLUMBING CONTRACTOR IN A FIRST CLASS WORKMANLIKE MANNER. THE COMPLETED SYSTEM SHALL BE FULLY OPERATIVE & ACCEPTANCE BY THE ARCHITECT/ENGINEER MUST BE A CONDITION OF THIS CONTRACT.
6. ALL EXCAVATION & BACKFILL AS REQ'D FOR THIS PHASE OF CONSTRUCTION SHALL BE A PART OF THIS CONTRACT.
7. REQUIRED INSURANCE SHALL BE PROVIDED BY THE CONTRACTOR FOR PROTECTION AGAINST PUBLIC LIABILITY & PROPERTY DAMAGE FOR THE DURATION OF WORK.
8. CONTRACTOR SHALL SECURE & PAY FOR ALL PERMITS, FEES, SERVICE REQUESTS, INSPECTIONS, & TESTS.
9. CONTRACTOR SHALL INCLUDE BID FOR GROUND PENETRATING RADAR (GPR) OR X–RAY TO SLAB IN ORDER TO LOCATE EXISTING UTILITIES IN REINFORCED CONCRETE (POST TENSION CABLES, ELECTRIC CABLES, PLUMBING, FIBER OPTICS). IN CONCRETE REBAR, VOIDS, SLABS THICKNESS, CONDUITS EMBEDDED IN CONCRETE (SLABS, WALLS, BALCONIES, AND COLUMNS).
10. ALL WORK SHALL BE COORDINATED WITH OTHER TRADES TO AVOID INTERFERENCE WITH THE PROGRESS OF CONSTRUCTION. ADVISE ARCHITECT OF DISCREPANCIES PRIOR TO BEGINNING CONSTRUCTION.
11. VERIFY LOCATION, SIZE, & INVERTS OF ALL EXISTING UTILITIES PRIOR TO BIDDING/BEGINNING CONSTRUCTION. ADVISE ARCHITECT/ENGINEER OF ANY DISCREPANCIES.
12. PIPING MATERIALS:

WATER: SCHEDULE 40 DWV PVC,

DRAIN, WASTE, & VENT: SCHEDULE 40 DWV PVC,

GAS: SCHEDULE 40 METALLIC PIPE ABOVE GROUND. IN PROTECTIVE PLASTIC SLEEVE WHEN UNDERGROUND.

CONDENSATE: TYPE "L" COPPER IN 1" ARMAFLEX. SCHEDULE 40 PVC INSULATED, USE HEAT WRAP UNDER FREEZING CONDITIONS.

VALVES: BRONZE RATED AT 125 PSI.

13. SEPARATION OF WATER SERVICE & BUILDING SEWER SHALL BE MIN 5 FEET. IF PIPES ARE LESS THAN 5 FEET APART, WATER SERVICE PIPE SHALL BE MIN 12 INCHES ABOVE SEWER PIPE.
14. UNDERGROUND PIPE SHALL BE LAID IN WELL COMPACTED EARTH. IF GROUND IS UNSTABLE, PIPE SHALL BE SUPPORTED WITH HANGERS SUSPENDED FROM CONCRETE BLOCK.
15. PROVIDE HEAT TRACING ON ALL PIPES SUBJECT TO FREEZING. PIPING INCLUDES BUT IS NOT LIMITED TO SANITARY, GREASE WASTE, STORM DRAINAGE, CONDENSATE DRAINAGE, & COLD WATER INSTALLED IN UNCONDITIONED SPACES.
16. ALL FIRE MAINS, WATER DISTRIBUTION, STORM DRAINAGE, CONDENSATE DRAINAGE, & GAS PIPING SHALL HAVE CLEARLY MARKED IDENTIFICATION & FLOW DIRECTION BANDS. GAS PIPING SHALL BE MARKED EVERY 15 FEET.
17. ISOLATE COPPER PIPE FROM HANGER OR SUPPORTS WITH ISOLATOR PAD (HAIR FELT LINING).
18. DIELECTRIC COUPLINGS ARE REQUIRED BETWEEN ALL DISSIMILAR METAL IN PIPING & EQUIPMENT CONNECTIONS.
19. ALL METALLIC PIPING, FITTINGS, & HANGERS EXPOSED TO CORROSIVE CONDITIONS SHALL HAVE A PROTECTIVE COATING THAT APPROPRIATELY RESISTS CORROSION.
20. FURNISH & INSTALL APPROVED WATER HAMMER ARRESTORS WHERE QUICK–CLOSING VALVES ARE UTILIZED, UNLESS OTHERWISE APPROVED. WATER HAMMER ARRESTORS SHALL CONFORM TO ASSE 1010 & SHALL BE INSTALLED IN ACCORDANCE WITH THE MANUFACTURER'S SPECIFICATIONS.
21. ALL FIXTURES MUST BE PROVIDED WITH READILY ACCESSIBLE STOPS & APPROPRIATELY MARKED ACCESS PANELS. COORDINATE LOCATIONS WITH GC PRIOR TO INSTALLATION.
22. PROVIDE ACCESS PANELS FOR ALL CONCEALED VALVES.
23. CLEANOUTS SHALL BE OF SAME MATERIALS AS PIPING. WALL CLEANOUTS SHALL BE PLACED AT THE BOTTOM OF EACH STACK. FLOOR CLEANOUTS SHALL BE PLACED AT EVERY 90' CHANGE. PROVIDE HEAVY DUTY BRONZE COVER CLEANOUTS IN TRAFFIC AREAS & EVERY 100 FEET. PROVIDE PVC PLUG IN LANDSCAPE AREAS.
24. ALL PIPING SHALL BE SECURED USING METHODS OF STRAPPING & HANGING APPROVED BY CODE.
25. ALL PIPING THROUGH FOUNDATION WALLS SHALL BE ENCASED IN PROTECTIVE SLEEVES.
26. ALL PIPING THROUGH FIRE RATED FLOORS & WALLS SHALL BE FIRE STOPPED USING UL LISTED METHOD ACHIEVING EQUAL RATING AS PENETRATED FLOOR OR WALL.
27. FURNISH REQUIRED FLASHING TO ROOFING CONTRACTOR FOR PIPES PENETRATING ROOF.
28. PROVIDE 1/2" TRAP PRIMER LINE FOR ALL DRAINS FROM THE NEAREST PLUMBING FIXTURE. CONTRACTOR HAS OPTION FOR UTILIZING INVERTED WYE FITTING FROM FIXTURE DRAIN TAILPIECE OR PRECISION PLUMBING PRODUCTS AUTOMATIC PRIMER WITH INTEGRAL BACKFLOW PREVENTER & VACUUM BREAKER.
29. ALL INSTALLATIONS SHALL MEET THE STANDARDS OF THE LOCAL AHJ & HEALTH DEPARTMENT.
30. CONTRACTOR SHALL CONSULT WITH ALL EQUIPMENT SUPPLIERS FOR ANY ACCESSORIES NECESSARY TO ACHIEVE A COMPLETE KITCHEN INSTALLATION.
31. NO COMBUSTIBLE MATERIAL SHALL BE USED IN MECHANICAL ROOMS OR IN CEILING SPACES WHERE USED AS RETURN AIR PLENUMS.
32. IF APPLICABLE TO PROJECT, WATER METER SHALL BE LOCATED WITHIN LEASED PREMISES PROVIDED BY LANDLORD CONTRACTOR AT TENANT'S EXPENSE. INSTALL METER IN AN EASILY ACCESSIBLE LOCATION.
33. SUBMIT SHOP DRAWINGS/SUBMITTALS ON ALL EQUIPMENT & OBTAIN APPROVAL PRIOR TO ORDERING & INSTALLATION OF WORK.
34. CONTRACTOR SHALL KEEP & MAINTAIN AS–BUILT DRAWINGS ON JOB SITE AT ALL TIMES & DELIVER A SET OF UP TO DATE AS–BUILTS TO THE ENGINEER & OWNER AT THE COMPLETION OF THE PROJECT.
35. DRAWINGS ARE DIAGRAMMATIC ONLY AND REPRESENT THE GENERAL SCOPE OF WORK NOT INTENDED TO SHOW EVERY MINOR DETAIL. CONTRACTOR IS RESPONSIBLE TO REVIEW GENERAL NOTES, SPECIFICATIONS, PLANS, LANDLORD DESIGN AND CONSTRUCTION CRITERIA DOCUMENTATION FOR ADDITIONAL REQUIREMENTS THAT MAY NOT BE SPECIFICALLY CALLED OUT IN THIS PORTION OF THE CONSTRUCTION DOCUMENTS. CONTRACTOR SHALL FURNISH & INSTALL ALL ITEMS AS REQ'D FOR A COMPLETE ACCEPTABLE WORKING INSTALLATION. DO NOT SCALE DRAWING FOR THE EXACT LOCATION OF FIXTURES, PIPING, EQUIPMENT, ETC. NOTIFY ARCHITECT OR ENGINEER OF ANY CONFLICTS OR DISCREPANCIES PRIOR TO SUBMISSION OF BID.

GENERAL PLUMBING NOTES (CONT.)

36. TESTING:

DRAINAGE & VENT AIR TEST: AN AIR TEST SHALL BE MADE BY FORCING AIR INTO THE SYSTEM UNTIL THERE IS A UNIFORM GAUGE PRESSURE OF 5 PIG OR SUFFICIENT TO BALANCE A 10" COLUMN OF MERCURY. THIS PRESSURE SHALL BE HELD FOR A PERIOD OF 15 MINUTES.

GRAVITY SEWER TEST: TEST SHALL CONSIST OF PLUGGING THE END OF THE PROJECT RELATED SEWER AT THE POINT OF CONNECTION WITH THE CITY SEWER SEWER, COMPLETELY FILLING THE SYSTEM WITH WATER FROM THE LOWEST TO THE HIGHEST POINT IN THE SYSTEM & MAINTAINING SUCH PRESSURE FOR AT LEAST 15 MINUTES.

WATER SUPPLY SYSTEM: UPON COMPLETION OF A SECTION OF OR AN ENTIRE WATER SUPPLY SYSTEM, THE SYSTEM, OR PORTION COMPLETED, SHALL BE TEST & PROVED WATER TIGHT UNDER A WATER PRESSURE NOT LESS THAN THE WORKING PRESSURE OF THE SYSTEM. THE WATER UTILIZED FOR THIS TEST SHALL BE OF A POTABLE SOURCE OF SUPPLY.
IN NEW CONSTRUCTION, STERILIZE WATER LINES WITH A MIXTURE OF 2 LB. OF CHLORINATED LIME TO EACH 1000 GALLONS OF WATER. RETAIN THE MIXTURE IN PIPES FOR 24 HOURS & FLUSH THOROUGHLY WITH POTABLE WATER BEFORE PLACING IN SERVICE.
REPAIR DEFECTS DISCLOSED BY ABOVE TEST. THE COMPLETE SYSTEM SHALL BE GIVEN A FULL OPERATION TEST BEFORE PLACING IN SERVICE.

PLUMBING SYMBOL LEGEND

SYMBOL	DESCRIPTION	SYMBOL	DESCRIPTION
	SANITARY LINE	FCO	FLUSH CLEAN OUT
	VENT LINE	FD	FLOOR DRAIN
SD	STORM DRAIN LINE	RD	ROOF DRAIN
	SAFEWASTE LINE	RD–1	PVC ROOF DRAIN (BODY AND DOME)
CD	CONDENSATE LINE	CO	CLEAN OUT
	COLD WATER LINE	WCO	WALL CLEANOUT
	HOT WATER LINE	COOG	CLEANOUT ON GRADE
	HOT WATER RETURN		FLOOR PENETRATION
G	GAS LINE		AIR CHAMBER
	GATE VALVE	VTR	VENT THRU ROOF
	BACKFLOW PREVENTER	RWL	RAIN WATER LEADER
		HB	HOSE BIBB W/VB

1. CONTRACTOR TO VERIFY MOUNTING HEIGHT OF ALL FIXTURES WITH INTERIOR DESIGNER & ARCHITECT PRIOR TO DEVICE INSTALLATION. REFER TO FLOOR PLAN FOR ADDITIONAL SPECIFICATIONS.
2. SOME SYMBOLS SHOWN ON THIS LEGEND MAY NOT PERTAIN TO THIS PROJECT.

SHOP DRAWING REQUIREMENTS

1. CONTRACTOR SHALL SUBMIT SIX (6) COPIES OF COMPLETED SHOP DRAWINGS & EQUIPMENT SUBMITTALS, TOGETHER AT ONE TIME & MUST COME THROUGH THE ARCHITECT. ALL SUBMITTALS SHALL BE MADE WITHIN THIRTY (30) DAYS OF NOTICE TO PROCEED.
2. ALL SUBMITTALS MUST CLEARLY INDICATE EXACTLY WHAT ITEMS ARE BEING PROPOSED FOR USE. IF NOT, THE SUBMITTAL SHALL BE REJECTED.
3. SUBSTITUTIONS SHALL BE LIMITED TO PRODUCT EQUIVALENTS & SHALL BE REVIEWED & ACCEPTED BY THE ENGINEER, ARCHITECT, & OWNER (10) DAYS PRIOR TO BID DATE.
4. THE CONTRACTOR ASSUMES ALL DESIGN RESPONSIBILITY & ALL FINANCIAL RISKS FOR PROCEEDING PRIOR TO SHOP DRAWINGS PROCESSING AND ON ANY ITEM OR WORK THAT IS AT VARIANCE TO THE CONSTRUCTION DOCUMENTS.
5. SHOP DRAWINGS AND SUBMITTALS FOR EACH ITEM SHALL BE REVIEWED NO MORE THAN TWICE. A THIRD SUBMITTAL ON AN ITEM MUST BE ACCOMPANIED BY A PURCHASE ORDER FROM THE CONTRACTOR OR IT SHALL BE REJECTED.
6. CIRCUMSTANCES NECESSITATING A REVISION TO THE PERMITTED DOCUMENTS NOT PROCESSED PRIOR TO INSTALLATION MAY NOT BE ACCEPTED. IF ACCEPTED, IT MUST BE LEGIBLE, ACCURATE, & ACCOMPANIED BY A PURCHASE ORDER ORDER FROM THE CONTRACTOR. THE REVISION SHALL BE CHARGED TO THE CONTRACTOR & DELIVERED TO HIM ON A COD BASIS.
7. SUBSTITUTIONS FROM THE BASE DESIGN OR VARIATIONS TO THE PERMITTED CONTRACT DOCUMENTS, WHETHER RESULTING FROM PROCESSED SHOP DRAWINGS OR NOT, THAT RESULT IN REQUIREMENTS IN LETTERS OF AUTHORIZATION AND/OR PERMIT CONTRACT DOCUMENT CHANGES MANDATED BY THE AUTHORITY HAVING JURISDICTION WILL NOT BE MADE BY THIS OFFICE UNLESS ACCOMPANIED BY A PURCHASE ORDER FROM THE CONTRACTOR, AND RELEASED ON A COD BASIS.

GREASE INTERCEPTOR CALCULATION

Project: BREWERY
Based on Florida Building Code - Plumbing

KITCHEN SINK - 3 COMPARTMENT

	Length	Width	Depth	Volume
Dimensions of each compartment (inches)	18.00	18.00	12.00	3888.00
Number of compartments				3
Dimensions of other compartment (inches)	18.00	18.00	12.00	3888.00
Number of compartments				3
Total volume in Cubic Inches (Each Compartment Volume x No. of Compartments				23328
Capacity in Gallons (1 Gallon = 231 Cubic Inches)				100.99
Actual Drainage Load in Gallons (75% of fixture Capacity)				75.74
Flow Rate GPM (at an Acceptable drainage period = 2 minutes)				37.87
Select Interceptor at rated capacity of not less than 40% of the fixture capacity in gallons:				40.39
Provide a Single Fixture Grease Interceptor Sized with a Minimum GPM Flow Rate of:				41

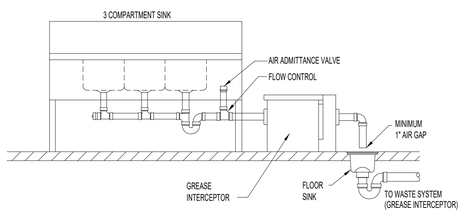

GREASE INTERCEPTOR DIAGRAM

NOT TO SCALE

PLUMBING FIXTURE SCHEDULE

MARK	DESCRIPTION	CONNECTIONS: WASTE	COLD WATER	HOT WATER	FLOW RATES	REMARKS
WC	WATER CLOSET: FLOOR MOUNTED, PRESSURE ASSISTED TANK FLUSH, VITREOUS CHINA, ADA COMPLIANT.	3"	1/2"	——	1.6 GPF	AMERICAN STANDARD CADET 3 SERIES RIGHT HEIGHT ELONGATED ONE–PIECE LUXURY PERFORMANCE TOILET WITH SEAT.
LAV	LAVATORY: WALL MOUNTED, VITREOUS CHINA, ADA COMPLIANT	1–1/2"	3/8"	3/8"	0.5 GPM	AMERICAN STANDARD LUCERNCE SERIES WITH AMERICAN STANDARD MONTERREY GOOSENECK FAUCET. PROVIDE 0.5 GPM AERATOR ON FAUCET IF NOT FACTORY INSTALLED.
EWC	ELECTRIC DRINKING FOUNTAIN: WALL MOUNTED, STAINLESS STEEL, ADA COMPLIANT	1–1/4"	1/4"	——	——	ELKAY VRCBS SELF–CONTAINED, ELECTRIC REFRIGERATED, VANDAL RESISTANT WATER COOLER.
MSK	MOP SERVICE BASIN	3"	1/2"	1/2"		ZURN Z1996–24 MOLDED HIGH DENSITY COMPOSITE BASIN (DIMENSIONS 24x24x10) WITH PVC DRAIN BODY & STAINLESS STEEL STRAINER. ZURN Z1996–SF CHROME PLATED SERVICE FAUCET.
SK, SK–1, SK–2 AND SK–3	SINK	1–1/2"	1/2"	1/2"	1.5 GPM	BY OWNER/ ARCHITECT
SPS	SHAMPOO STATION	1–1/2"	3/8"	3/8"		BY OWNER/ ARCHITECT SHALL BE INSTALLED AS PER MANUFACTURER SPECIFICATIONS.
NS	NAILS STATION NOT USED	1"	1/2"	1/2"		BY OWNER/ ARCHITECT SHALL BE INSTALLED AS PER MANUFACTURER SPECIFICATIONS.
BSK	BARBER SINK	1–1/2"	1/2"	1/2"		BY OWNER/ ARCHITECT

NOTES:
1. ALL FIXTURES & FAUCETS SHALL COMPLY WITH THE **FBC** WATER CONSERVATION REQUIREMENTS–(**TABLE 604.4**).
2. ALL WALL HUNG PLUMBING FIXTURES SHALL COMPLY WITH **FBC SECTION 2318.1.15 & 2517.5.1.1**
3. PER ADA COMLIANCE, INSULATE ALL EXPOSED HANDICAP LAVATORY DRAIN PIPING AND HOT & COLD STOP AND SUPPLIES. COVERS SHALL BE SOFT, REMOVABLE, AND UPC APPROVED. PROVIDE PLUMBEREX HANDY–SHIELD OR PRO–SERIES.

DRAIN & CLEANOUT SCHEDULE

DESIGNATION	DESCRIPTION	DRAIN	CW	REMARKS
FD	FLOOR DRAIN	3"	1/2"	ZURN Z415BZ–P
HD	HUB DRAIN	2"	——	ZURN Z415E
CO	WALL CLEANOUT	MATCH PIPE	——	ZURN Z1446–VP

SHOCK ARRESTOR SCHEDULE

P.D.I. DESIGNATION	MAKE/MODEL	FIXTURE UNITS	CONNECTION
A	SIOUX CHIEF 652–A	1–11	1/2"
B	SIOUX CHIEF 653–B	12–32	3/4"
C	SIOUX CHIEF 654–C	33–60	1"

SIOUX CHIEF SHOCK ARRESTORS ARE APPROVED FOR INSTALLATION WITH NO ACCESS DOOR REQUIRED. CONFORMS TO ANSI/ASSE 1010 STANDARDS.

SLOPE OF HORIZONTAL DRAINAGE PIPE

SIZE (inches)	MINIMUM SLOPE (inch per foot)
2–1/2 or less	1/4
3 to 6	1/8
8 or larger	1/16

TABLE 704.1 OF THE FLORIDA PLUMBING CODE

PLUMBING SCOPE OF WORK

TENANT BUILDOUT

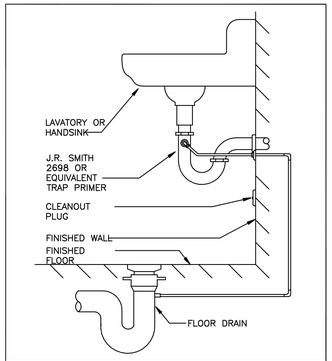

TRAP PRIMER DETAIL SCALE: NTS

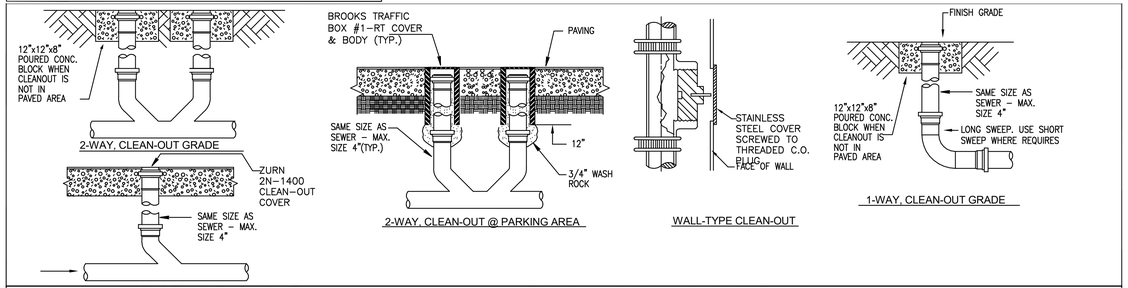

1–WAY, INTERIOR CLEAN OUT

TYPICAL CLEAN–OUT DETAILS SCALE: N.T.S.

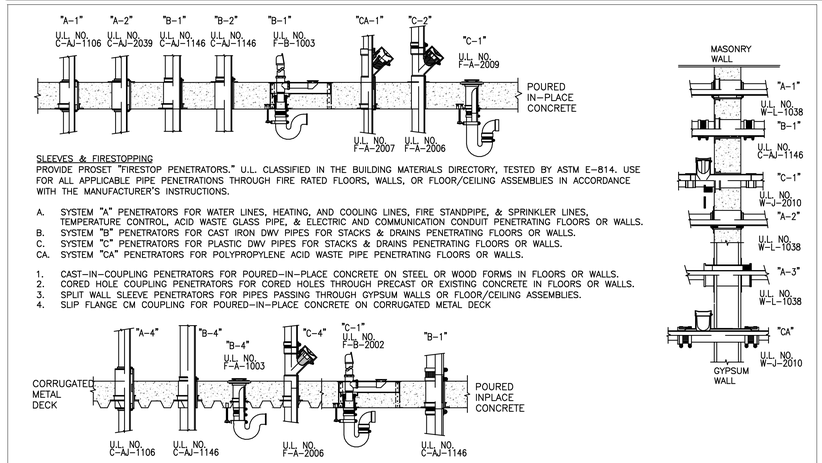

SLEEVES & FIRESTOPPING
PROVIDE PROSET "FIRESTOP PENETRATORS." U.L. CLASSIFIED IN THE BUILDING MATERIALS DIRECTORY, TESTED BY ASTM E–814. USE FOR ALL APPLICABLE PIPE PENETRATIONS THROUGH FIRE RATED FLOORS, WALLS, OR FLOOR/CEILING ASSEMBLIES IN ACCORDANCE WITH THE MANUFACTURER'S INSTRUCTIONS.

A. SYSTEM "A" PENETRATORS FOR WATER LINES, HEATING, AND COOLING LINES, FIRE STANDPIPE, & SPRINKLER LINES, TEMPERATURE CONTROL, ACID WASTE CLASS PIPE, & ELECTRIC AND COMMUNICATION CONDUIT PENETRATING FLOORS OR WALLS.
B. SYSTEM "B" PENETRATORS FOR CAST IRON DWV PIPES FOR STACKS & DRAINS PENETRATING FLOORS OR WALLS.
C. SYSTEM "C" PENETRATORS FOR PLASTIC DWV PIPES FOR STACKS & DRAINS PENETRATING FLOORS OR WALLS.
CA. SYSTEM "CA" PENETRATORS FOR POLYPROPYLENE ACID WASTE PIPE PENETRATING FLOORS OR WALLS.

1. CAST–IN–COUPLING PENETRATORS FOR POURED–IN–PLACE CONCRETE ON STEEL OR WOOD FORMS IN FLOORS OR WALLS.
2. CORED HOLE COUPLING PENETRATORS FOR CORED HOLES THROUGH PRECAST OR EXISTING CONCRETE IN FLOORS OR WALLS.
3. SPLIT WALL SLEEVE PENETRATORS FOR PIPES PASSING THROUGH GYPSUM WALLS OR FLOOR/CEILING ASSEMBLIES.
4. SLIP FLANGE CM COUPLING FOR POURED–IN–PLACE CONCRETE ON CORRUGATED METAL DECK

FIRE STOPPING PENETRATION DETAIL SCALE: N.T.S.

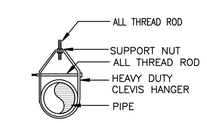

CLEVIS HANGER SINGLE HORIZONTAL RUNS WITH NO VAPOR BARRIER INSULATION

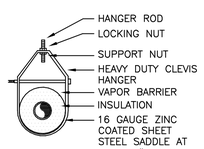

CLEVIS HANGER SINGLE HORIZONTAL RUNS WITH VAPOR BARRIER INSULATION

PIPE SUPPORT DETAIL SCALE: N.T.S.

SEAL

Sarasota ARCHITECTURE
Interior design inspections construction management
A K T M R Corporation company
1960 Stickney Point Road, Suite 201
Sarasota, Florida 34231 AR92053

(239) 443-6178 Cell
http://www.westcoastdrafting.com
West-Coast Drafting
- a drafting company - quality & accuracy -

REMODEL
1313 SE 47TH TER
CAPE CORAL FL 33904
STRAP: 07-45-24-C3-00360.0250
Folio ID: 10190045

BREWERY

SKYBAR AT 47TH LLC
TRUE
BUILDING

ISSUED FOR: *** CONCEPT ***

REVISIONS

MK	DESCRIPTION	DATE
No.	Description	Date

Project number: 23-2124.1
Project Issue Date: --
Project Status: CONCEPT

PLUMBING NOTES & SCHEDULES - BREWERY

SHEET: 2 of 19

SHEET NUMBER
P-1.2
4. PLUMBING

NOTE: THESE PLANS ARE SCHEMATIC IN NATURE, IF A DISCREPANCY EXIST BETWEEN THE PLANS AND THE ACTUAL FIELD CONDITIONS, THE CONTRACTOR IS TO NOTIFY THE OWNER WITHIN 10 (TEN) DAYS. AFTER 10 DAYS, THE CONTRACTOR IS RESPONSIBLE FOR THE PROJECT IN ITS ENTIRETY.

1/10/2024 9:21:03 AM

PLAN KEYNOTES

Key Value	Keynote Text

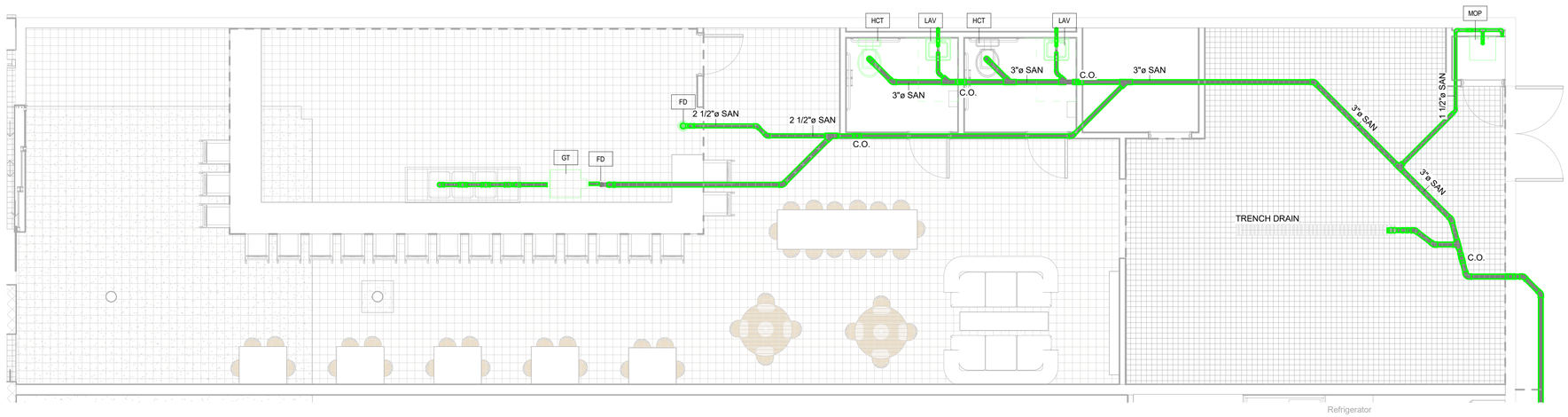

3 P-1.3 **PLUMBING DRAINAGE PLAN**
1/4" = 1'-0"

PER FBCP 405.1 WATER SUPPLY PROTECTION. THE SUPPLY LINES AND FITTINGS FOR EVERY PLUMBING FIXTURE SHALL BE INSTALLED SO AS TO PREVENT BACKFLOW.

WASHING MACHINE TO DISCHARGE INTO LINT FILTER, LINT FILTER TO DISCHARGE TO WMB, SEE DETAIL ABOVE

CONTRACTOR TO VENT ALL NEW FIXTURES, AND TIE INTO EXITING VENT SYSTEM

NOTE:
604.9 WATER HAMMER ARRESTORS (HA)

NOTE:
604.9 WATER HAMMER.
WMB TO HAVE WATER HAMMER ARRESTORS

NOTE:
604.9WATER HAMMER.
THE FLOW VELOCITY OF THE WATER DISTRIBUTION SYSTEM SHALL BE CONTROLLED TO REDUCE THE POSSIBILITY OF WATER HAMMER. A WATER-HAMMER ARRESTOR SHALL BE INSTALLED WHERE QUICK-CLOSING VALVES ARE UTILIZED. WATER-HAMMER ARRESTORS SHALL BE INSTALLED IN ACCORDANCE WITH THE MANUFACTURER'S INSTRUCTIONS. WATER-HAMMER ARRESTORS SHALL CONFORM TO ASSE 1010.

M:\Dropbox\projects\23-2124 - 1313 SE 47th Ter - Aava\CAD FILES\47TERR v8.rvt

SEAL

Sarasota ARCHITECTURE
Interior design inspections construction management
A K T M R Corporation company
1960 Stickney Point Road, Suite 201
Sarasota, Florida 34231 AR92053

(239) 443-6178 Cell
http://www.westcoastdrafting.com
West-Coast Drafting
- a drafting company - quality & accuracy -

REMODEL
1313 SE 47TH TER
CAPE CORAL FL 33904
STRAP: 07-45-24-C3-00360.0250
Folio ID: 10190045

BREWERY

SKYBAR AT 47TH LLC
TRUE
BUILDING

ISSUED FOR: *** CONCEPT ***

REVISIONS

MK	DESCRIPTION	DATE
No.	Description	Date

Project number: 23-2124.1
Project Issue Date: --
Project Status: CONCEPT

PROPOSED PLUMBING PLAN - BREWERY

SHEET: 3 of 19

SHEET NUMBER
P-1.3
4. PLUMBING

NOTE: THESE PLANS ARE SCHEMATIC IN NATURE, IF A DISCREPANCY EXIST BETWEEN THE PLANS AND THE ACTUAL FIELD CONDITIONS, THE CONTRACTOR IS TO NOTIFY THE OWNER WITHIN 10 (TEN) DAYS. AFTER 10 DAYS, THE CONTRACTOR IS RESPONSIBLE FOR THE PROJECT IN ITS ENTIRETY.

PLAN KEYNOTES

Key Value	Keynote Text

WATER HEATER SCHEDULE

TAG	DESCRIPTION	MANUFACTURER	MODEL	CAPACITY (GAL)	RECOVERY (GPH) (80° RISE)	ELECTRICAL KW	ELECTRICAL V / PH	REMARKS
WH-1	ELECTRIC WATER HEATER	STATE	PATRIOT PCE 20 10MSA	20	23	4.5	208/1	1,2

REMARKS:
1. PROVIDE WITH TEMPERATURE/PRESSURE RELIEF VALVE
2. PROVIDE WITH ARMTROL ST-5 EXPANSION TANK

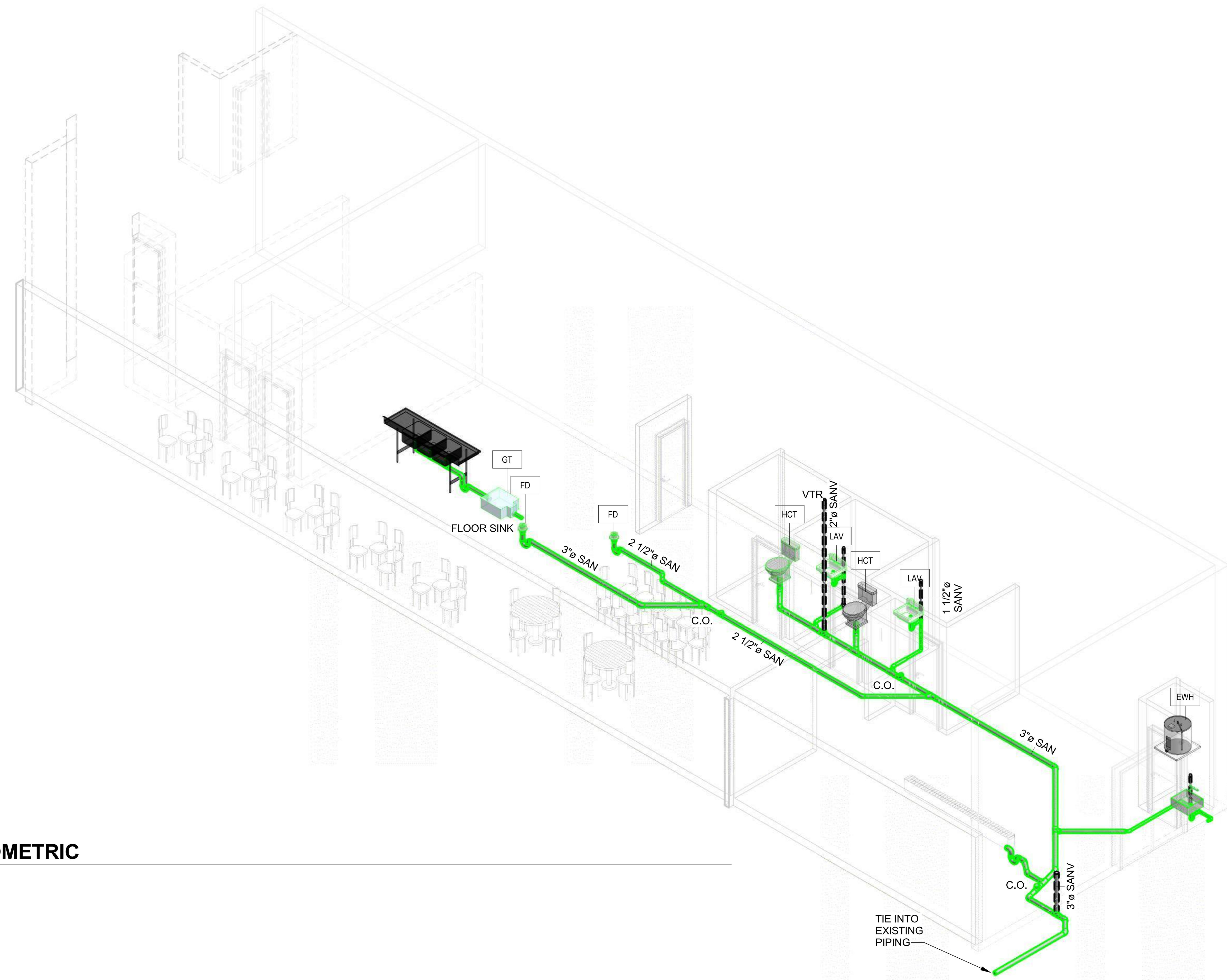

1 P-1.4 **DRAINAGE ISOMETRIC**

PLUMBING FIXTURE DEMAND TABULATION

Project Name: BREWERY — BUILDING TYPE: RENOVATION
Location: CAPE CORAL — PREDOMINANTLY: FLUSH TANK
Date: September 11, 2023

FIXTURE	DESCRIPTION	OCCUPANCY	QTY.	DRAINAGE FIXTURE UNITS	SUB-TOTAL	LOAD VALUES, (EACH) IN WATER SUPPLY FIXTURE UNITS (WSFU) COLD	HOT	TOTAL	LOAD VALUES (TOTAL), IN WATER SUPPLY FIXTURE UNITS (WSFU) COLD	HOT	TOTAL	Remarks
HCT	Water Closet, Flush Tank, 1.6 GPF	Public	2	4	8	5.0	-	5.0	10	0	10	
LAV	Lavatory	Public	2	1	2	1.5	1.5	2.0	3	3	4	
3-B SINK	Kitchen Sink, THREE Compartment	Private	1	2	2	1.0	1.0	1.4	1	1	1.4	
H.SINK	Hand Sink, Single Compartment	Hotel, Restaurant	4	1	4	0.5	0.5	0.7	2	2	2.8	
MS	Mop (Service) Sink	Offices, etc.	1	2	2	2.25	2.25	3.0	2.25	2.25	3	
FD	Floor Drain - General / Restroom	--	4	2	8	0.0	0.0	0.0	0	0	0	
TOTALS		total fixture count =	14		26	DFU			18.25	8.25	21.2	WSFU
DFU = DRAINAGE FIXTURE UNITS					EIGHTH	INCH SLOPE PER FOOT			18.9	13.0	20.1	GPM
WSFU = WATER SUPPLY FIXTURE UNITS					3	DIAMETER OF PIPE (INCHES)			-	-	1.5	INCHES REQ'D.

PLUMBING REQUIREMENTS

THE WORK INCLUDES MODIFICATION TO THE EXISTING PLUMBING SYSTEM AND PROVIDING NEW MATERIALS, FITTINGS AND ACCESSORIES NECESSARY FOR A COMPLETE FUNCTIONING PLUMBING SYSTEM. ALL WORK SHALL BE IN ACCORDANCE WITH LOCAL CODES AND/OR ORDINANCES AND IS SUBJECT TO INSPECTION.

HOOK-UP CHARGES, PERMITS AND ALL OTHER EXPENSES RELATED TO A COMPLETE AND FUNCTIONING PLUMBING SYSTEM ARE INCLUDED AS A PART OF THIS SECTION.

THE INTENT OF THE DRAWINGS IS TO INDICATE THE GENERAL EXTENT OF WORK REQUIRED FOR THE PROJECT. THE DRAWINGS FOR PLUMBING WORK ARE DIAGRAMMATIC, SHOWING THE GENERAL LOCATION, TYPE, FIXTURES AND EQUIPMENT REQUIRED. THE DRAWINGS SHALL NOT BE SCALED FOR EXACT MEASUREMENTS. REFER TO MANUFACTURER'S STANDARD ROUGH-IN DRAWINGS FOR PLUMBING FIXTURE INSTALLATION REQUIREMENTS. COMPLY WITH ALL APPLICABLE ADA INSTALLATION REQUIREMENTS.

COORDINATE WITH THE WORK OF OTHER SECTIONS, EQUIPMENT FURNISHED BY OTHERS, AND WITH THE CONSTRAINTS OF THE EXISTING CONDITIONS OF THE PROJECT SITE.

PIPING SYSTEMS - GENERAL: ALL PIPING SHALL BE RUN PARALLEL TO BUILDING LINES AND SUPPORTED AND ANCHORED AS REQUIRED TO FACILITATE EXPANSION AND CONTRACTION. ALL PIPING SHALL BE CONCEALED EXCEPT IN UNFINISHED SPACES. INSTALL AS REQUIRED TO MEET ALL CONSTRUCTION CONDITIONS AND TO ALLOW FOR INSTALLATION OF OTHER WORK SUCH AS DUCTS AND ELECTRICAL CONDUIT. AT ALL CONNECTIONS BETWEEN FERROUS PIPING AND NONFERROUS PIPING, PROVIDE AN ISOLATING DIELECTRIC UNION. ALL HANGERS SHALL BE COMPATIBLE WITH PIPING MATERIAL TO PREVENT CORROSION.

PROVIDE ALL FITTINGS, ACCESSORIES, OFFSETS, AND MATERIALS NECESSARY TO FACILITATE THE PLUMBING SYSTEM'S FUNCTIONING AS INDICATED BY THE DESIGN AND THE EQUIPMENT INDICATED.

FIXTURES/EQUIPMENT FURNISHED BY OTHERS: PLUMBING CONTRACTOR SHALL PROVIDE UTILITY CONNECTIONS REQUIRED SUCH AS WATER, GAS, SUPPLIES, WASTE OUTLET, TRAPS, ETCETERAS AT ALL PLUMBING TYPE FIXTURES OR EQUIPMENT FURNISHED BY OWNER, GENERAL CONTRACTOR, EQUIPMENT SUPPLIER, ETCETERA. INCLUDED ARE STOP VALVES, ESCUTCHEONS, AND CHROME PLATED BRASS TUBING WITH COMPRESSION FITTINGS.

SANITARY SEWER PIPING: PROVIDE ALL DRAINS AND PIPING WITHIN THE PROJECT SPACE WITH CONNECTION TO THE EXISTING DRAINAGE SYSTEMS ON-SITE. SANITARY DRAINAGE PIPING ABOVE FLOOR SHALL BE ABS/PVC PLASTIC PIPE, WITH SOLVENT WELD FITTINGS, OR HUBLESS CAST-IRON PIPE AND FITTINGS AND CONNECTIONS. SANITARY DRAINAGE PIPING BELOW GRADE SHALL BE ABS/PVC PLASTIC PIPE WITH SOLVENT WELD FITTINGS, OR SERVICE-WEIGHT HUB AND SPIGOT TYPE CAST-IRON WITH NEOPRENE GASKET JOINT SYSTEM. NO ABS/PVC PLASTIC PIPING IS ALLOWED WITHIN THE CEILING VOIDS IF USED FOR NON-DUCTED RETURN AIR PLENUM. ALL DRAINAGE PIPING SHALL BE UNIFORMLY PITCHED AT 1/4" PER FOOT FOR PIPE SIZES 3" AND SMALLER AND 1/8" PER FOOT FOR PIPE SIZES 4" AND LARGER, UNLESS OTHERWISE REQUIRED BY EXISTING CONDITIONS, OR INDICATED ON THE DRAWINGS.

SANITARY VENT PIPING: PROVIDE A COMPLETE SYSTEM OF ABS/PVC PLASTIC PIPE, WITH SOLVENT WELD FITTINGS, OR STANDARD WEIGHT CAST IRON NO-HUB PIPE AND FITTINGS. NO ABS/PVC PIPING IS ALLOWED WITHIN THE CEILING VOIDS IF USED FOR NON-DUCTED RETURN AIR PLENUMS. THE VENT SYSTEM SHALL BE CARRIED THROUGH THE ROOF WITH APPROPRIATE FLASHING.

CONDENSATE AND INDIRECT DRAIN PIPING: TYPE M COPPER TUBING UP TO 1" ID, TYPE DWV COPPER TUBING AND FITTINGS FOR 1-1/4" AND LARGER SIZES.

STORM WATER PIPING: PROVIDE ALL STORM DRAINS AND PIPING WITHIN THE PROJECT SPACE WITH CONNECTION TO THE EXISTING STORM SYSTEMS ON-SITE. STORM PIPING ABOVE FLOOR SHALL BE ABS/PVC PLASTIC PIPE, WITH SOLVENT WELD FITTINGS, OR HUBLESS CAST-IRON PIPE AND FITTINGS AND CONNECTIONS. STORM PIPING BELOW GRADE SHALL BE ABS/PVC PLASTIC PIPE, WITH SOLVENT WELD FITTINGS, OR SERVICE-WEIGHT HUB AND SPIGOT TYPE CAST-IRON WITH NEOPRENE GASKET JOINT SYSTEM. NO ABS/PVC PLASTIC PIPING IS ALLOWED WITHIN THE CEILING VOIDS IF USED FOR NON-DUCTED RETURN AIR PLENUMS. ALL STORM PIPING SHALL BE UNIFORMLY PITCHED AT A MINIMUM OF 1/8" PER FOOT UNLESS OTHERWISE REQUIRED BY EXISTING CONDITIONS, OR INDICATED ON THE DRAWINGS.

CLEANOUTS: PROVIDE CLEANOUTS AT THE END OF EACH HORIZONTAL RUN, AND AT THE BASE OF ALL VERTICAL STORM, WASTE AND DRAIN PIPES. CLEANOUTS SHALL BE OF THE SAME SIZE AS THE PIPES THEY SERVE, CONFORMING TO CODE REQUIREMENTS. PROVIDE SUITABLE WALL OR FLOOR CLEANOUTS WITH ACCESSORIES TO OBSCURE FROM VIEW.

WATER DISTRIBUTION PIPING: LAYOUT WATER PIPING SO THAT THE ENTIRE SYSTEM CAN BE DRAINED. ABOVE GRADE HOT AND COLD WATER PIPING SHALL BE 1/2" MINIMUM TYPE L COPPER TUBING WITH WROUGHT COPPER FITTINGS AND SWEAT CONNECTIONS. BELOW GRADE HOT AND COLD WATER PIPING SHALL BE 1/2" MINIMUM TYPE K COPPER TUBING WITH WROUGHT COPPER FITTINGS, AND SWEAT CONNECTIONS. PROVIDE WATER HAMMER ARRESTERS AT EACH FIXTURE OR GROUP OF FIXTURES AS REQUIRED. INSTALL CHROME PLATED BRASS ESCUTCHEON PLATES AT ALL PENETRATIONS THROUGH FINISHED SURFACES (INCLUDING CABINET INTERIORS). USE LEAD FREE OR TIN-ANTIMONY SOLDER, 95/5 FOR ALL SWEAT FITTINGS OF COPPER PIPING.

PIPE INSULATION: RIDGE ONE-PIECE FIBERGLASS PIPE INSULATION WITH REQUIREMENTS COMPLYING WITH ASTM C 547, SELF-SEALING ADHESIVE LAP LONGITUDINAL JOINTS AND BUTT STRIPS FOR TRANSVERSE JOINTS. JACKETING SHALL CONFORM TO ASTM C 1136, TYPE I, MAXIMUM VAPOR TRANSMISSION RATING OF 0.02 PERM WHEN TESTED ACCORDING TO ASTM E 96, PROCEDURE A. (K VALVE) 0.25 BTU/IN./HR. * FT2 * °F AT 75°F MEAN TEMPERATURE WITH A MINIMUM R-VALVE OF R4.

PROVIDE INSULATION THICKNESS AS INDICATED:
DOMESTIC COLD WATER PIPING 1" AND SMALLER: 1/2" THICKNESS.
DOMESTIC COLD WATER PIPING 1-1/4" - 2": 3/4" THICKNESS.
PLUMBING VENT PIPING WITHIN 6 FEET OF ROOF OUTLET: 1" THICKNESS.
STORM WATER PIPING: 1" THICKNESS.
OVERFLOW STORM WATER PIPING: 1" THICKNESS.
CONDENSATE PIPING: 1/2" THICKNESS.
DOMESTIC HOT WATER PIPING 2" AND SMALLER: 1" THICKNESS.

WATER AND WASTE PIPING BELOW HANDICAP LAVATORIES/SINKS.

PIPE INSULATION: FLEXIBLE, ONE PIECE, EXPANDED CLOSED-CELL ELASTOMERIC PIPE INSULATION WITH REQUIREMENTS COMPLYING WITH ASTM C 518, SELF-SEALING, WITH A MAXIMUM VAPOR TRANSMISSION RATING OF 0.20 PERM WHEN TESTED ACCORDING TO ASTM E 96. THERMAL CONDUCTIVITY (K VALVE) SHALL NOT EXCEED 0.27 BTU/IN./HR. * FT2 * °F AT 75°F MEAN TEMPERATURE WITH A MINIMUM R-VALUE OF R3.7, AND INSULATION AND JACKET SHALL BE RATED FOR OPERATING TEMPERATURES FROM 40°F TO 180°F.

PROVIDE INSULATION THICKNESS AS INDICATED:

DOMESTIC COLD WATER PIPING 2" AND SMALLER: 1/2" THICKNESS.
DOMESTIC HOT WATER PIPING 2" AND SMALLER: 1/2" THICKNESS.
SANITARY PIPING 2" AND SMALLER: 1/2" THICKNESS.
CONDENSATE PIPING: 1/2" THICKNESS.

SHUTOFF VALVES WITH UNIONS SHALL BE PROVIDED FOR SERVICE TO EACH PLUMBING FIXTURE OR OTHER EQUIPMENT ITEM, TO OR OTHER EQUIPMENT ITEM, TO OR OTHER EQUIPMENT ITEM, TO FACILITATE ISOLATION FOR REPAIR OR REPLACEMENT. PIPE LINE VALVES SHALL BE EQUAL TO CRANE SERIES #9200, QUARTER TURN BALL VALVE. CONSTRUCTION - TWO PIECE, BRONZE BODY, FULL PORTED, CHROME PLATED BRASS BALL, REPLACEABLE "TEFLON OR TFE" SEATS AND SEALS. RATING - 150 PSI WSP, 600 PSI WOG. CONNECTIONS - SOLDER OR THREADED ENDS TO MATCH PIPING. STANDARDS COMPLIANCE - BRONZE OR BRASS VALVES: MSS-SP-110. WHEN SHUTOFF VALVE ARE PLACE IN THE CEILING THE VALVES WILL BE LOCATED AT A MAXIMUM OF 12" ABOVE THE CEILING, AND NOTHING SHALL BE PLACE BETWEEN THE CEILING ACCESS AND THE VALVES.

ACCESS PANELS SHALL BE PROVIDED WHERE CONCEALED CONTROL DEVICES, VALVES, ETCETERA ARE CONCEALED WITHIN WALLS. WHERE ACCESS FOR ADJUSTMENT AND MAINTENANCE IS POSSIBLE THROUGH LAY-IN SUSPENDED CEILINGS, ACCESS PANELS ARE NOT REQUIRED.

INSTALLATION: THOROUGHLY CLEAN ITEMS BEFORE INSTALLATION. CAP PIPE OPENINGS TO EXCLUDE DIRT UNTIL FIXTURES ARE INSTALLED AND FINAL CONNECTIONS HAVE BEEN MADE. PROCEED AS RAPIDLY AS CONSTRUCTION WILL PERMIT. SET FIXTURES LEVEL AND IN PROPER ALIGNMENT. INSTALL SUPPLIES IN PROPER ALIGNMENT WITH FIXTURES. INSTALL SILICONE SEALANT BETWEEN FIXTURES AND ADJACENT MATERIAL, FOR SANITARY JOINT, AND OMIT ESCUTCHEONS.

REPAIR EXISTING PLUMBING SYSTEM COMPONENTS DAMAGED BY CONSTRUCTION OPERATIONS AND RESTORE TO ORIGINAL CONDITIONS.

TEST WATER SYSTEM UNDER 150 PSIG HYDROSTATIC PRESSURE, FOR FOUR (4) HOURS MINIMUM. WHEN TESTING INDICATES MATERIALS OR WORKMANSHIP IS DEFICIENT, REPLACE OR REPAIR AS REQUIRED, AND REPEAT TEST UNTIL STANDARDS ARE ACHIEVED.

TEST SANITARY DRAINAGE AND VENT SYSTEM BY FILLING WITH WATER, WITH ALL POINTS IN THE SYSTEM BEING SUBJECT TO PRESSURE OF AT LEAST 10' OF WATER. WATER LEVEL SHALL REMAIN STATIONARY FOR A PERIOD OF ONE HOUR, WITHOUT ANY PIPE OR JOINT LEAKAGE. IF TESTING INDICATES DEFICIENTS REPLACE OR REPAIR AS REQUIRED, AND REPEAT TEST UNTIL STANDARDS ARE ACHIEVED.

PROVIDE A COMPLETE GAS PIPING SYSTEM TO SERVE GAS FIRED HVAC EQUIPMENT AS NOTED ON THE DRAWINGS. PROVIDE AS NOTED ON THE DRAWINGS. PROVIDE AS NOTED ON THE DRAWINGS. PROVIDE EITHER THREADED STEEL OR MALLEABLE IRON PIPE WITH MALLEABLE FITTINGS OR WELDED STEEL. PROVIDE ALL UNIONS, SHUT-OFF VALVES AND DIRT LEGS REQUIRED BY NFPA-54 AND GOVERNING LOCAL CODES AND AT EACH GAS APPLIANCE CONNECTION. PROVIDE ALL TESTS, METERS, INSPECTIONS, HANGERS AND EQUIPMENT CONNECTIONS REQUIRED FOR A COMPLETE AND OPERATING SYSTEM.

SEAL

Sarasota
ARCHITECTURE
Interior design inspections construction management
AKTMR Corporation company
1960 Stickney Point Road, Suite 201
Sarasota, Florida 34231 AR92053

(239) 443-6178 Cell
http://www.westcoastdrafting.com
West-Coast Drafting
- a drafting company - quality & accuracy -

REMODEL
1313 SE 47TH TER
CAPE CORAL FL 33904
STRAP: 07-45-24-C3-00360.0250
Folio ID: 10190045

BREWERY

SKYBAR AT 47TH LLC

TRUE
BUILDING

ISSUED FOR: *** CONCEPT ***

REVISIONS

MK No.	DESCRIPTION Description	DATE Date

Project number: 23-2124.1
Project Issue Date: --
Project Status: CONCEPT

PROPOSED PLUMBING ISO - BREWERY

SHEET: 4 of 19

SHEET NUMBER
P-1.4
4. PLUMBING

NOTE: THESE PLANS ARE SCHEMATIC IN NATURE, IF A DISCREPANCY EXIST BETWEEN THE PLANS AND THE ACTUAL FIELD CONDITIONS, THE CONTRACTOR IS TO NOTIFY THE OWNER WITHIN 10 (TEN) DAYS. AFTER 10 DAYS, THE CONTRACTOR IS RESPONSIBLE FOR THE PROJECT IN ITS ENTIRETY.