crosspoint realty services

# Harborgate Shopping Center

## Marina Bay Parkway | Richmond, California

## NOW LEASING

| SPACE# | SF | RENT | NNN |
|---|---|---|---|
| A1-a | 938 | Call | $13.82 |
| A6 | 1,705 | Call | $14.32 |

**For information, contact:**

Andy Armstrong
Direct: 415-689-5357
aarmstrong@crosspointrealty.com
CA DRE ##01860367

Carter Hemming
chemming@crosspointrealty.com
CA DRE #01123464

Kathy DeOchoa
kdeochoa@crosspointrealty.com
CA DRE #01871554

Phone: 415-288-6888
Fax: 415-288-6877
Crosspoint Realty Services, Inc.
20211 Patio Drive, Suite 145
Castro Valley, CA 94546
www.crosspointreatly.com

# Harborgate Shopping Center

## Marina Bay Parkway | Richmond, California

## SPACE PLAN – A1-a; 938 SF

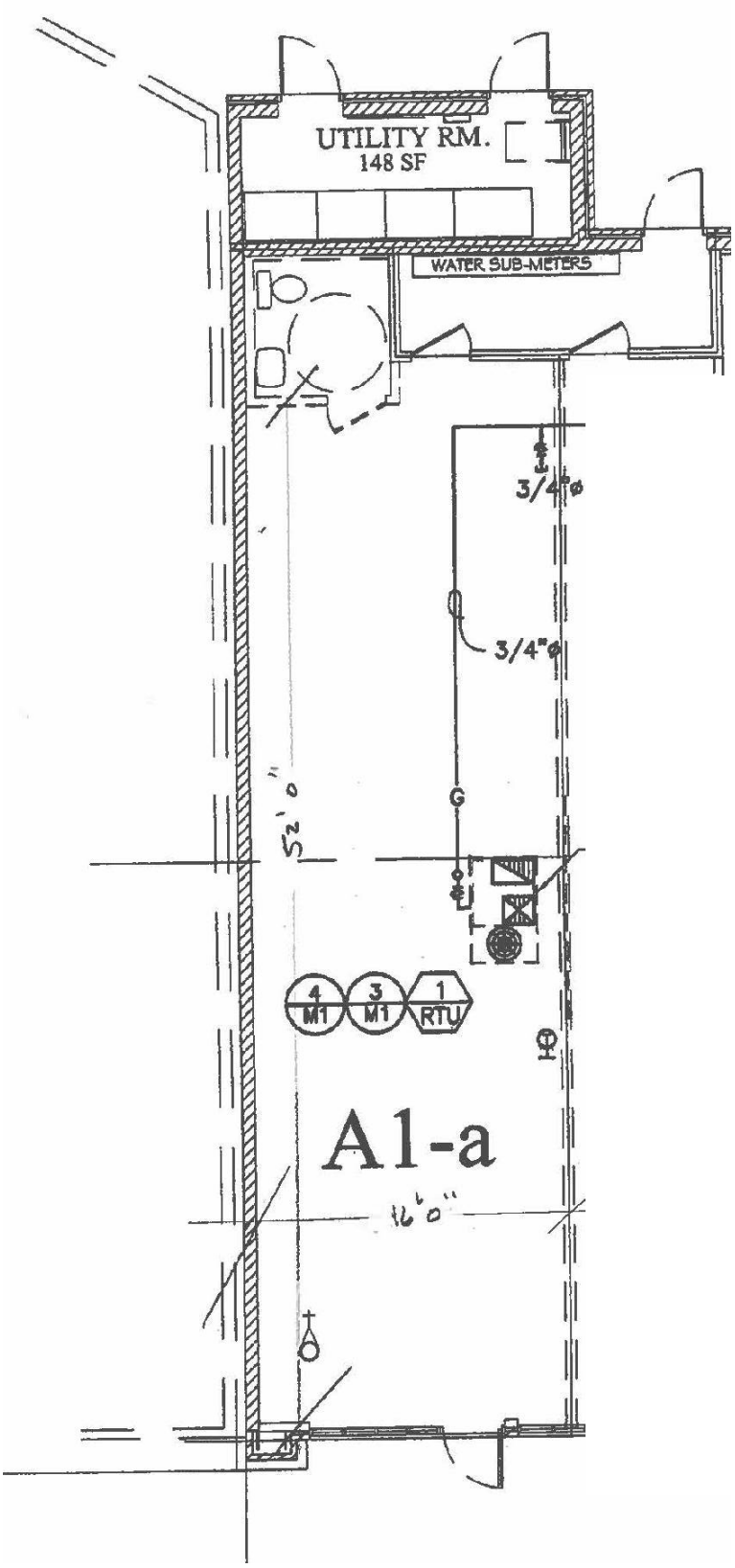



**For information, contact:**

Andy Armstrong
Direct: 415-689-5357
aarmstrong@crosspointrealty.com
CA DRE ##01860367

Carter Hemming
chemming@crosspointrealty.com
CA DRE #01123464

Kathy DeOchoa
kdeochoa@crosspointrealty.com
CA DRE #01871554

Phone: 415-288-6888
Fax: 415-288-6877
Crosspoint Realty Services, Inc.
20211 Patio Drive, Suite 145
Castro Valley, CA 94546
www.crosspointrealty.com

# Harborgate Shopping Center

## Marina Bay Parkway | Richmond, California

## SPACE PLAN – A6; 1,705 SF

Contact: Andy Armstrong CA DRE# 01860367, aarmstrong@crosspointrealty.com; Carter Hemming CA DRE#01123464, chemming@crosspointrealty.com; Kathy DeOchoa (CA DRE#01871554), kdeochoa@crosspointrealty.com Phone 415.288.6888

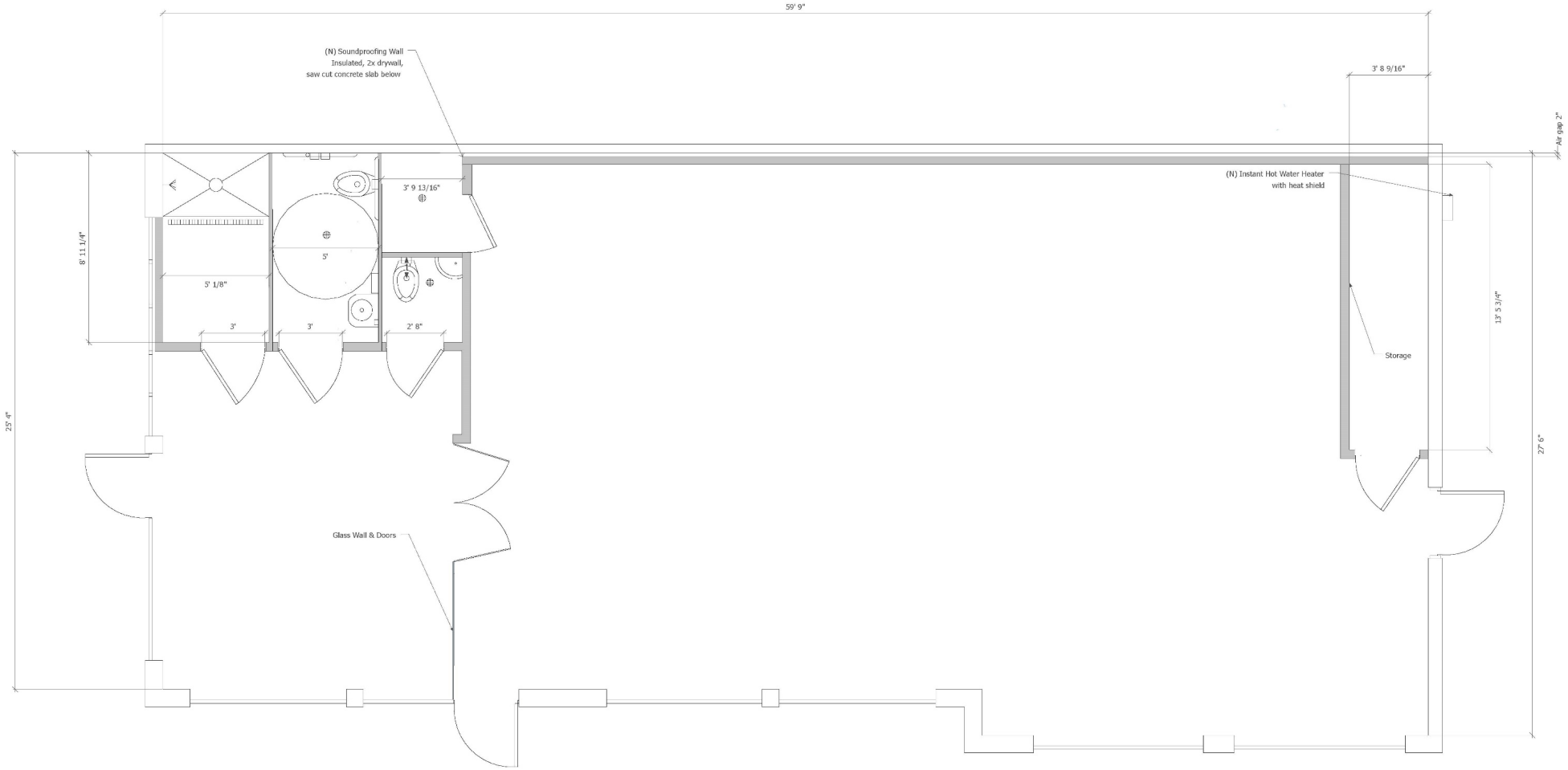

# Harborgate Shopping Center

## Marina Bay Parkway | Richmond, California

## SITE PLAN

Contact: Andy Armstrong CA DRE# 01860367, aarmstrong@crosspointrealty.com; Carter Hemming CA DRE#01123464, chemming@crosspointrealty.com; Kathy DeOchoa (CA DRE#01871554), kdeochoa@crosspointrealty.com Phone 415.288.6888

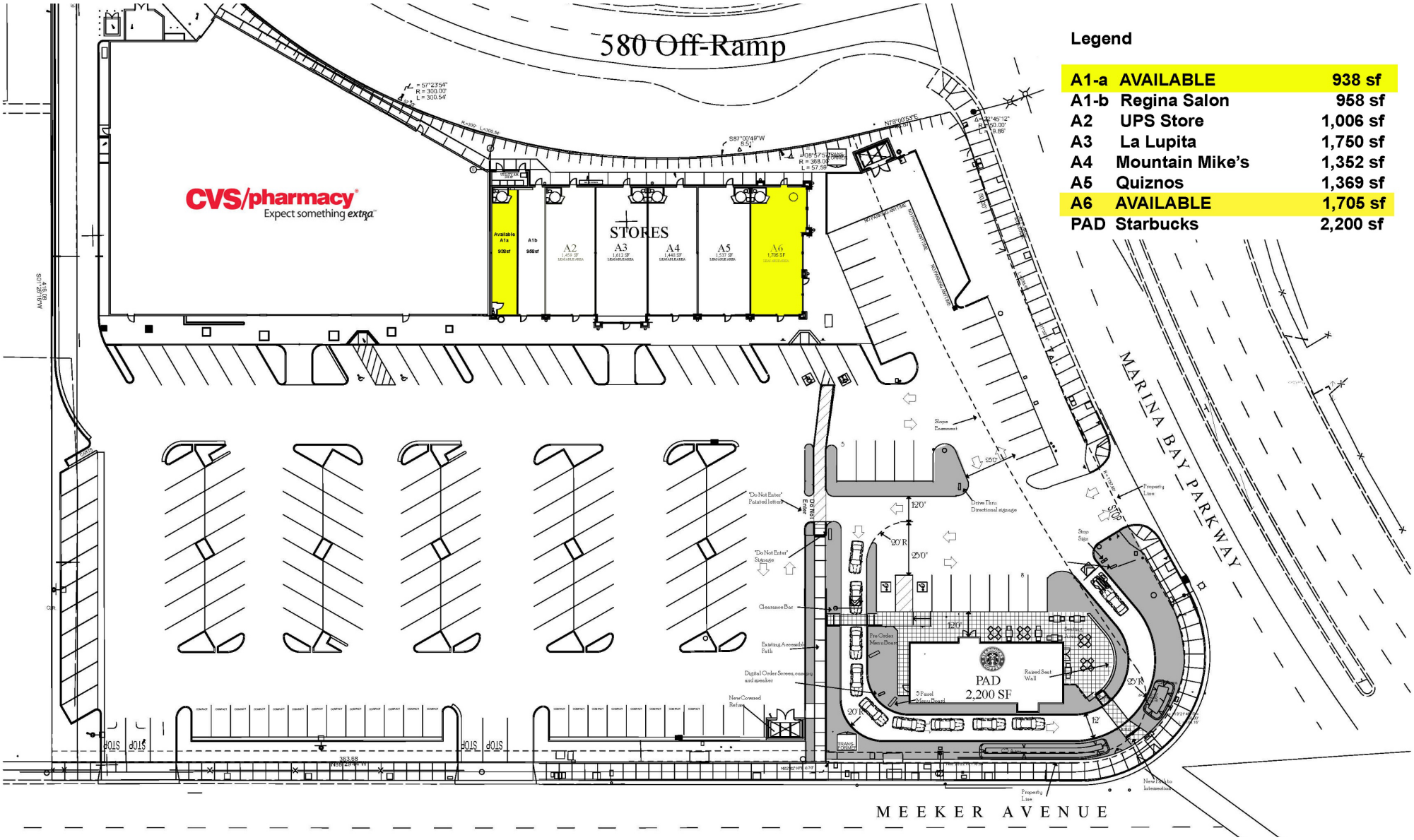

# Harborgate Shopping Center

Marina Bay Parkway | Richmond, California

## MARKET AREA

**Harbor Gate Tenants Include:**

CVS
Starbucks
Quizno's
Mountain Mike's
La Lupita
Regina Salon
Bridges Fitness

**For information, contact:**

Andy Armstrong
Direct: 415-689-5357
aarmstrong@crosspointrealty.com
CA DRE ##01860367

Carter Hemming
chemming@crosspointrealty.com
CA DRE #01123464

Kathy DeOchoa
kdeochoa@crosspointrealty.com
CA DRE #01871554

Phone: 415-288-6888
Fax: 415-288-6877
Crosspoint Realty Services, Inc.
20211 Patio Drive, Suite 145
Castro Valley, CA 94546
www.crosspointreatly.com

crosspoint realty services

# Harborgate Shopping Center

Marina Bay Parkway | Richmond, California

## MAP & INFORMATION

**Description:**
Harborgate Shopping Center is conveniently located off I-580 at Marina Bay Parkway. Anchored by CVS, this 35,000 square foot convenience center is the gateway to the bay-side community of Marina Bay, boasting some of the areas better quality restaurants and services.

**Location:**
2151 – 2181 Meeker Avenue, Richmond, CA.
NWC of I-580 and Marina Bay Parkway.

**For information, contact:**


Andy Armstrong
Direct: 415-689-5357
aarmstrong@crosspointrealty.com
CA DRE ##01860367

Carter Hemming
chemming@crosspointrealty.com
CA DRE #01123464

Kathy DeOchoa
kdeochoa@crosspointrealty.com
CA DRE #01871554

Phone: 415-288-6888
Fax: 415-288-6877
Crosspoint Realty Services, Inc.
20211 Patio Drive, Suite 145
Castro Valley, CA 94546
www.crosspointreatly.com