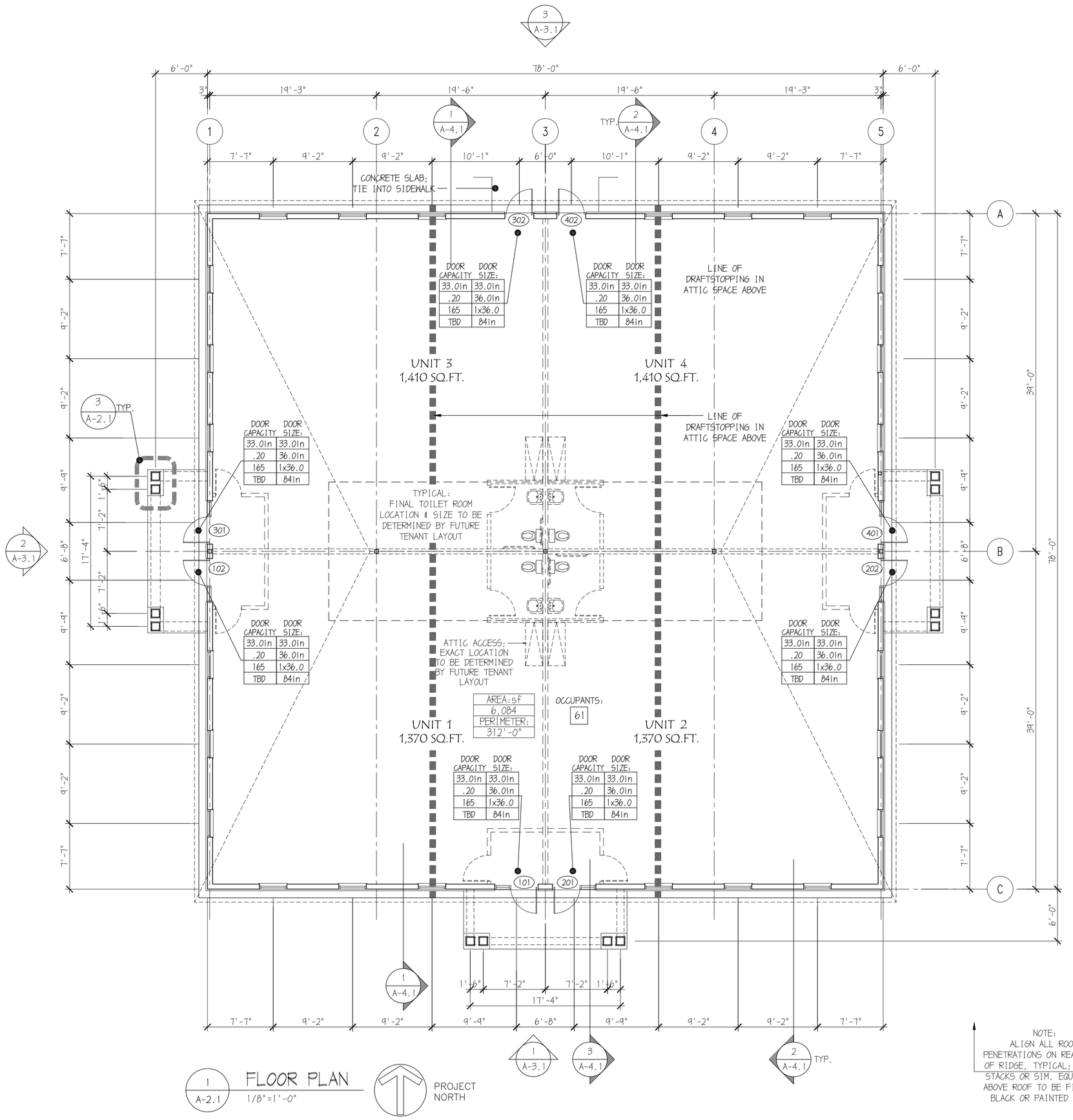

1 A-2.1 FLOOR PLAN 1/8"=1'-0"

PROJECT NORTH

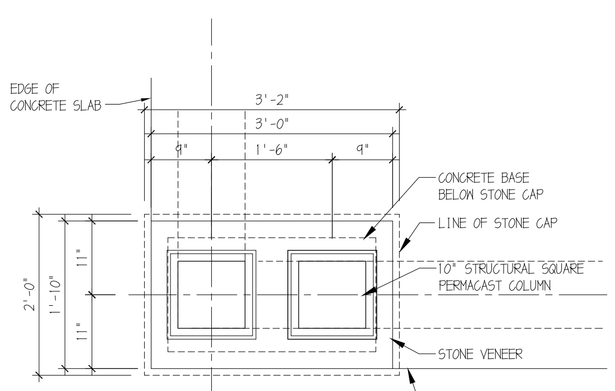

3 A-2.1 PLAN DETAIL 3/4"=1'-0"

CODE DATA:

ALL LABOR AND MATERIAL FOR THIS PROJECT SHALL BE GOVERNED BY THE FOLLOWING INFORMATION:

ALL CONSTRUCTION SHALL BE IN ACCORDANCE WITH THE INTERNATIONAL BUILDING CODE/2000, NEW JERSEY EDITION

BUILDING 'A' & BUILDING 'B':

1. USE GROUP CLASSIFICATION (IBC SECTION 302):
   B (BUSINESS) PER IBC 304.1
2. MIXED OCCUPANCY SEPARATION (IBC 302.3): N/A
3. CONSTRUCTION CLASSIFICATION (IBC 602):
   VB (COMBUSTIBLE) - PER IBC 602.5
4. BUILDING AREA:
   6,084 SF (ACTUAL)
   9,000 SF (ALLOWABLE w/SPRINKLER SYSTEM INCREASE)
5. BUILDING HEIGHT:
   1 STORY; 20'6" (ACTUAL)
   2 STORY; 40'0" (ALLOWABLE PER TABLE 503)

ALL CONSTRUCTION SHALL BE IN ACCORDANCE WITH INTERNATIONAL BUILDING CODE, 2000 N.J. ED., INCLUDING ADOPTED SUPPLEMENTS AND ALL APPLICABLE LOCAL CODES

6. FIRE RESISTANCE RATINGS (IBC TABLE 601)

STRUCTURAL FRAME	0	HR. PER IBC TABLE 601
EXTERIOR BEARING WALLS	0	HR. PER IBC TABLE 601
INTERIOR BEARING WALLS	0	HR. PER IBC TABLE 601
NONBEARING WALLS & PARTITIONS	0	HR. PER IBC TABLE 601
FLOOR CONSTRUCTION INCLUDING BEAMS	0	HR. PER IBC TABLE 601
ROOF CONSTRUCTION	0	HR. PER IBC TABLE 601

7. EXTERIOR WALL RATINGS (IBC TABLE 602)
   EXTERIOR WALLS 0 HR. PER IBC TABLE 602
   (SEE SITE PLAN FOR FIRE SEPARATION DISTANCE)
8. FIRE WALLS N/A
9. EXIT ENCLOSURES N/A
10. SHAFT ENCLOSURES N/A
11. EXIT ACCESS CORRIDORS N/A
12. INTERIOR FINISHES PER IBC SECTION 801
13. FIRE PROTECTION SYSTEMS: N/A
14. FIRE ALARM AND DETECTION SYSTEMS: N/A
15. FIRE EXTINGUISHER REQUIREMENTS: T.B.D.
16. DESIGN OCCUPANCY LOAD:
    OFFICE: (6,084 S.F.) / 100 = 61 OCCUPANTS PER TABLE 1003.2.2.2
17. ACTUAL OCCUPANCY LOAD: T.B.D.
18. EXIT TRAVEL DISTANCE: 200 FEET MAX.
19. FIREBLOCKING /DRAFTSTOPPING:
    PROVIDE IN ACCORDANCE WITH IBC SECTION 716

LEGEND:

DOOR SIZE:		DOOR CAPACITY	
X	CLEAR DOOR WIDTH	X	CLEAR DOOR WIDTH
X	NOMINAL DOOR WIDTH	0.15	WIDTH PER OCCUPANT (TABLE 1003.2.3)
X	DOOR LEAVE(S)	X	MAXIMUM CAPACITY
X	DOOR HEIGHT	X	ACTUAL OCCUPANT LOAD

AREA: sf 6,084 / PERIMETER: 312'-0" — AREA TAG

PERIMETER TAG — ACCESS. PERIM. 312'-0"

USE GROUP: "B" — INDICATES "IBC 2000" USE GROUP

CONST. TYPE: "VB" — INDICATES "IBC 2000" CONSTRUCTION TYPE

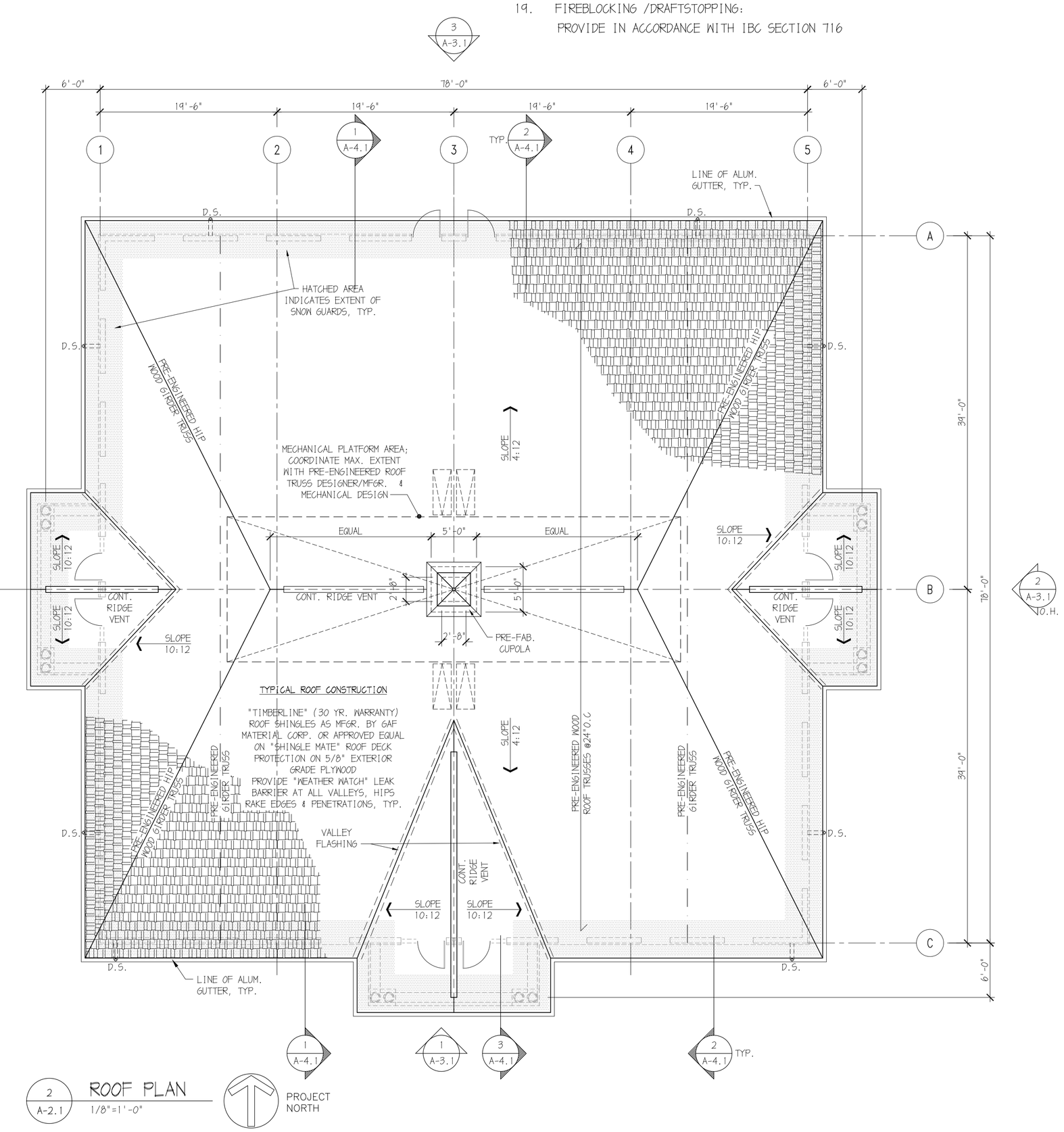

NOTE: ALIGN ALL ROOF PENETRATIONS ON REAR SIDE OF RIDGE. TYPICAL; VENTS, STACKS OR SIM. EQUIPMENT ABOVE ROOF TO BE FINISHED BLACK OR PAINTED BLACK

2 A-2.1 ROOF PLAN 1/8"=1'-0"

PROJECT NORTH

RUGGIERI & PARTNERS
ARCHITECTURE
PLANNING
INTERIOR DESIGN

1225 NORTH BROAD STREET SUITE 4
WOODBURY NJ 08096

t: 856.384.1225 f: 856.384.1220
e-mail: info@ruggieriandpartners.com
website: www.ruggieriandpartners.com

PHILIP A. RUGGIERI R.A.

CLIENT:

FELMAN INVESTMENTS

8 MEMORIAL PARKWAY
LONG BRANCH, NJ
07740

PROJECT:

Tuckerton Professional Campus

Tax Lot 6 Block 49
Borough of Tuckerton
Ocean County, NJ

REVISIONS:

11/06/06 PLANNING BOARD ISSUE
04/27/07 ISSUED FOR PERMIT

SHEET TITLE:

FLOOR PLAN & ROOF PLAN

DRAWN BY:	idp
CHECKED BY:	PAR
SCALE:	
DATE:	10/25/06
PROJECT NUMBER:	B06010

DRAWING NUMBER:

A-2.1

C:\1\B\B06010\A2_1.dwg
Jul 09, 2007 - 10:53am
user