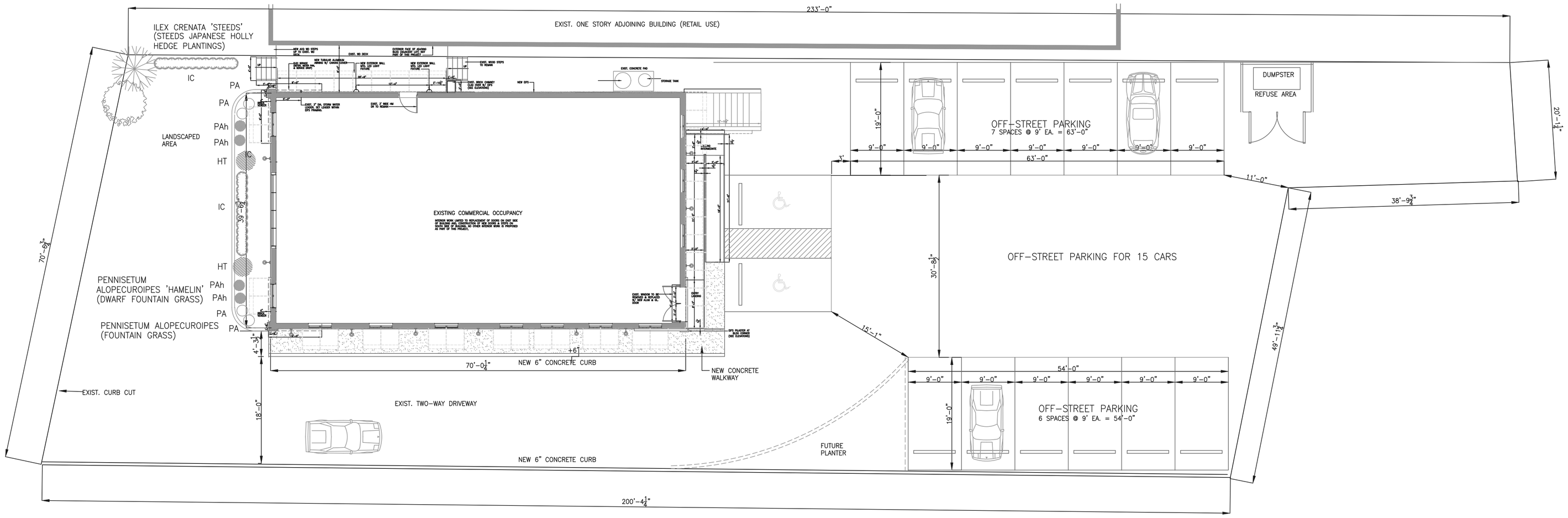

SITE PLAN

SCALE: 1" = 10'-0"

GENERAL NOTES

1. ALL CONCRETE CURBS, SIDEWALKS, & DRAINAGE STRUCTURES SHALL CONFORM TO PLANNING BD. STANDARD DETAILS & SPECIFICATIONS. ALL CONCRETE SHALL BE 4,000 PSI.
2. TOWN OF BROOKHAVEN PLANNING BD. SHALL BE NOTIFIED 48 HOURS PRIOR TO START OF ANY CONSTRUCTION.
3. LOCATIONS & GRADES OF CURBS & WALKS SHALL BE VERIFIED PRIOR TO CONSTRUCTION W/ TOWN OF BROOKHAVEN HIGHWAY DEPT.
4. ALL TRAFFIC CONTROL DEVICES SUCH AS SIGNALS, SIGNS, & PAVEMENT MARKINGS, SHALL BE INSTALLED IN CONFORMANCE WITH THE GUIDELINES OF THE AGENCIES (LOCAL & STATE) WHICH HAVE JURISDICTION ON THIS PROJECT.
5. CONTRACTOR PERFORMING TRAFFIC CONTROL DEVICE WORK SHALL NOTIFY THE TOWN OF BRROKHAVEN DIVISION OF TRAFFIC SAFETY, 48 HOURS PRIOR TO THE START OF ANY WORK ALONG A TOWN ROAD.
6. ALL PAVEMENT MARKINGS REQUIRED, SHALL BE THERMOPLASTIC PER SUFFOLK COUNTY SPECIFICATIONS.
7. STOP LINE SIGHT DISTANCE SHALL BE MAINTAINED AT ALL INTERSECTIONS IN ACCORDANCE AMERICAN ASSOCIATION OF STATE HIGHWAY & TRANSPORTATION OFFICIALS REQUIREMENTTS.
8. TEMPORARY FENCING TO BE INSTALLED AND INSPECTED PRIOR TO ANY CONSTRUCTION OR DISTURBANCE OF THE SITE.

SITE NOTES

1. ALL SIGNAGE WILL BE WOOD CARVED OR SIMILAR WITH EXTERNAL. BUILDING MOUNTED LIGHT FIXTURES.
2. A PERMIT WILL BE SECURED FROM THE BUILDING DEPT. AS A SEPARATE APPLICATION BY THE SIGNAGE CONTRACTOR, FOR THE SIGNAGE & AWNINGS.
3. PARKING AREA SHALL BE RE-STRIPED & NEW ADA PARKING SIGNAGE INSTALLED IN COMPLIANCE WITH ANSI 117.1 & THE NYS BUILDING CODE.

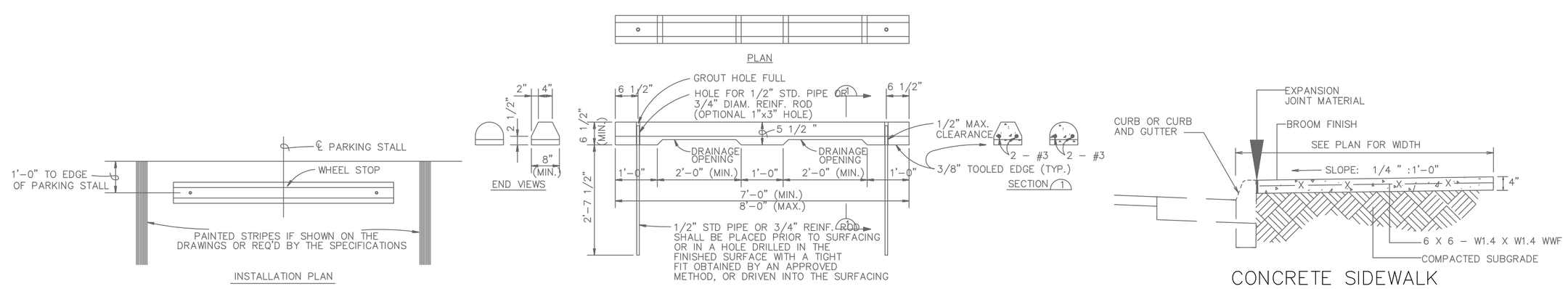

PRECAST CONCRETE WHEEL STOP DETAILS

N.T.S.

CONCRETE SIDEWALK

© FRANK A. LOMBARDO ARCHITECT
NO USE, REPRODUCTION, OR DISSEMINATION MAY BE MADE OF THIS DRAWING, OR ITS IDEAS, CONCEPTS, DESIGNS, SKETCHES, MODELS, SPECIFICATIONS, PROGRAMS, SOFTWARE, REPORTS, OR OTHER INTANGIBLE DELIVERABLES, AS SET FORTH HEREIN WITHOUT PRIOR WRITTEN CONSENT OF FRANK A. LOMBARDO, R.A. ARCHITECT. THIS DRAWING IS & SHALL REMAIN THE PROPERTY OF FRANK A. LOMBARDO R.A.

THE LIABILITY OF FRANK A. LOMBARDO RA, ARCHITECT, FOR ERRORS, OMMISSIONS, OR NEGLIGENCE RESULTING IN PERSONAL INJURIES, PROPERTY DAMAGE, OR ANY CONSEQUENTIAL DAMAGES, IS LIMITED TO THE AMOUNT OF THE FEE CHARGED FOR THESE DRAWINGS. THE USE OF THESE DRAWINGS BY THE CLIENT OF THESE DRAWINGS WILL CONSTITUTE AN ACCEPTANCE OF THIS LIMITATION OF LIABILITY. IF IT IS UNACCEPTABLE, THE CLIENT MUST NOTIFY FRANK A. LOMBARDO RA, IN WRITING BY CERTIFIED MAIL, WITHIN SEVEN (7) DAYS OF THE RECEIPT OF THESE DRAWINGS. THE FEE CHARGED FOR THESE DRAWINGS IS BASED UPON THIS LIMITATION OF LIABILITY WHICH IS THE ESSENCE OF THIS AGREEMENT. IF THE CLIENT WANTS A HIGHER LIMITATION OF LIABILITY, FRANK A. LOMBARDO RA, WILL NEGOTIATE ONE BASED UPON A HIGHER FEE BEING CHARGED FOR THE ADDITIONAL ASSUMPTION OF LIABILITY. FRANK A. LOMBARDO RA, ARCHITECT HAS NO LIABILITY TO PERSONS OTHER THAN THE CLIENT FOR WHOM THESE DRAWINGS WERE PREPARED. ANYONE OTHER THAN FRANK A. LOMBARDO RA, ARCHITECT'S CLIENT RELIES ON THESE DRAWINGS AT THEIR OWN RISK.

Frank A. Lombardo Architect
R.A. NY 15424

SUBMISSION LOG

NO.	DATE	DESCRIPTION
	1/17/24	CLIENT COMMENTS

AGENCY FILE NO.

BLDG DEPT.

FACADE RESTORATION
911 MONTAUK HIGHWAY
MASTIC-SHIRLEY, N.Y.

N

FRANK A. LOMBARDO
ARCHITECT
P.O. BOX 128
WESTHAMPTON, NY 11977-0128
tel.: 631-357-1438
E Mail : FrankLombardo@Yahoo.com

DRAWING TITLE :
SITE PLAN

DATE:	1/25/24
PROJECT NO.:	—
DWG. BY:	FAL
CHK BY:	FAL

DWG. NO.
A-101