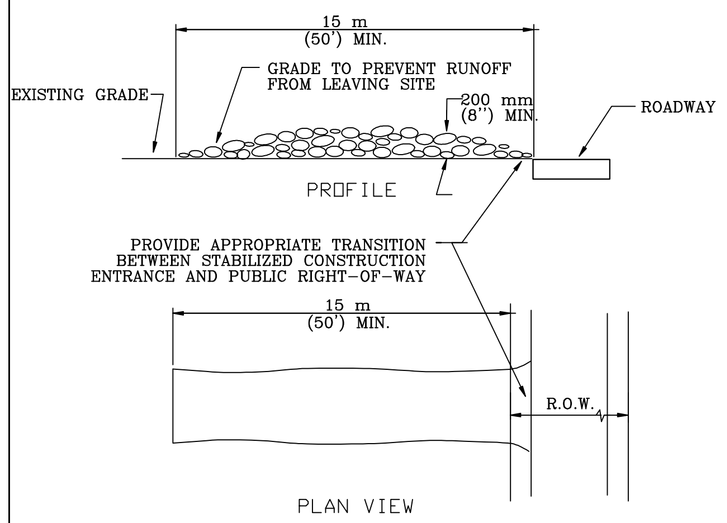

NOTES:
1. STONE SIZE: 75–125 mm (3–5") OPEN GRADED ROCK.
2. LENGTH: AS EFFECTIVE BUT NOT LESS THAN 15 m (50').
3. THICKNESS: NOT LESS THAN 200 mm (8").
4. WIDTH: NOT LESS THAN FULL WIDTH OF ALL POINTS OF INGRESS/EGRESS.
5. WASHING: WHEN NECESSARY, VEHICLE WHEELS SHALL BE CLEANED TO REMOVE SEDIMENT PRIOR TO ENTRANCE ONTO PUBLIC ROADWAY. WHEN WASHING IS REQUIRED, IT SHALL BE DONE ON AN AREA STABILIZED WITH CRUSHED STONE AND DRAINS INTO AN APPROVED TRAP OR SEDIMENT BASIN. ALL SEDIMENT SHALL BE PREVENTED FROM ENTERING ANY STORM DRAIN, DITCH OR WATERCOURSE USING APPROVED METHODS.
6. MAINTENANCE: THE ENTRANCE SHALL BE MAINTAINED IN A CONDITION THAT WILL PREVENT TRACKING OR FLOWING OF SEDIMENT ONTO PUBLIC ROADWAY. THIS MAY REQUIRE PERIODIC TOP DRESSING WITH ADDITIONAL STONE AS CONDITIONS DEMAND, AS WELL AS REPAIR AND CLEAN OUT OF ANY MEASURE DEVICES USED TO TRAP SEDIMENT. ALL SEDIMENTS THAT IS SPILLED, DROPPED, WASHED OR TRACKED ONTO PUBLIC ROADWAY MUST BE REMOVED IMMEDIATELY.
7. DRAINAGE: ENTRANCE MUST BE PROPERLY GRADED OR INCORPORATE A DRAINAGE SWALE TO PREVENT RUNOFF FROM LEAVING THE CONSTRUCTION SITE.

CITY OF AUSTIN WATERSHED PROTECTION DEPARTMENT	STABILIZED CONSTRUCTION ENTRANCE		
RECORD COPY SIGNED BY J. PATRICK MURPHY 5/23/00 ADOPTED	THE ARCHITECT/ENGINEER ASSUMES RESPONSIBILITY FOR APPROPRIATE USE OF THIS STANDARD.	STANDARD NO. 641S-1	

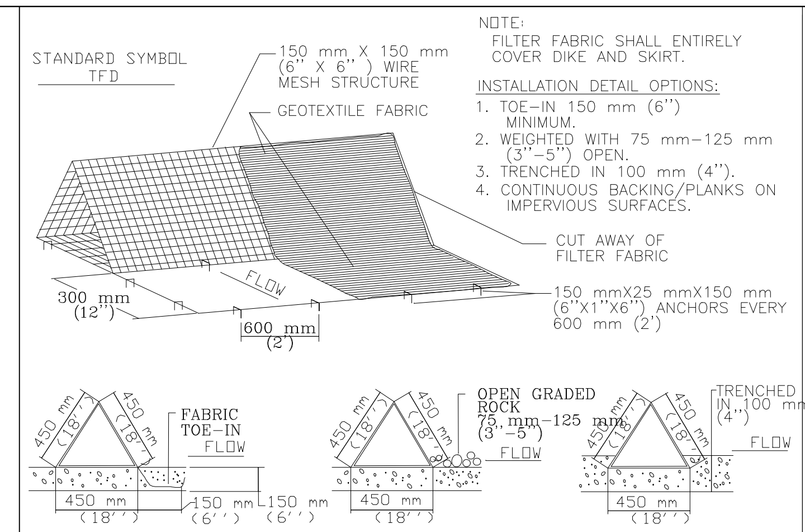

NOTE:
FILTER FABRIC SHALL ENTIRELY COVER DIKE AND SKIRT.

INSTALLATION DETAIL OPTIONS:
1. TOE-IN 150 mm (6") MINIMUM.
2. WEIGHTED WITH 75 mm–125 mm (3"–5") OPEN.
3. TRENCHED IN 100 mm (4").
4. CONTINUOUS BACKING/PLANKS ON IMPERVIOUS SURFACES.

GENERAL NOTES
1. DIKES SHALL BE PLACED IN A ROW WITH ENDS TIGHTLY ABUTTING THE ADJACENT DIKE.
2. THE FABRIC COVER AND SKIRT SHALL BE A CONTINUOUS WRAPPING OF GEOTEXTILE. THE SKIRT SHALL BE A CONTINUOUS EXTENSION OF THE FABRIC ON THE UPSTREAM FACE.
3. THE SKIRT SHALL BE WEIGHTED WITH A CONTINUOUS LAYER OF 75–125 mm (3–5") OPEN GRADED ROCK OR TOED-IN 150 mm (6") WITH MECHANICALLY COMPACTED MATERIAL. OTHERWISE, THE ENTIRE STRUCTURE SHALL BE TRENCHED IN 100 mm (4").
4. DIKES AND SKIRT SHALL BE SECURELY ANCHORED IN PLACE USING 150 mm (6") WIRE STAPLES ON 600 mm (2') CENTERS ON BOTH EDGES AND SKIRT, OR STAKE USING 10M (3/8 ") DIAMETER RE-BAR WITH TEE ENDS.
5. FILTER MATERIAL SHALL BE LAPPED OVER ENDS 150 mm (6") TO COVER DIKE TO DIKE JOINTS. JOINTS SHALL BE FASTENED WITH GALVANIZED SHOAT RINGS.
6. THE DIKE STRUCTURE SHALL BE MW40-150 mmX150 mm (6 GA. 6"X6") WIRE MESH, 450 mm (18") ON A SIDE.
7. INSPECTION SHALL BE MADE WEEKLY OR AFTER EACH RAINFALL EVENT AND REPAIR OR REPLACEMENT SHALL BE MADE PROMPTLY AS NEEDED BY THE CONTRACTOR.
8. ACCUMULATED SILT SHALL BE REMOVED WHEN IT REACHES A DEPTH OF 150 mm (6") AND DISPOSED OF IN A MANNER WHICH WILL NOT CAUSE ADDITIONAL SILTATION.
9. AFTER THE DEVELOPMENT SITE IS COMPLETLY STABILIZED, THE DIKES AND ANY REMAINING SILT SHALL BE REMOVED. SILT SHALL BE DISPOSED OF AS INDICATED IN GENERAL NOTE 8 ABOVE.

CITY OF AUSTIN WATERSHED PROTECTION DEPARTMENT	TRIANGULAR SEDIMENT FILTER DIKE		
RECORD COPY SIGNED BY J. PATRICK MURPHY 3/27/00 ADOPTED	THE ARCHITECT/ENGINEER ASSUMES RESPONSIBILITY FOR APPROPRIATE USE OF THIS STANDARD.	STANDARD NO. 628S	

BARNES® EHV
SUBMERSIBLE EFFLUENT PUMPS
3/4" Spherical Solids Handling

SECTION	B
PAGE	1
DATE	5/03
REPLACES	12/02

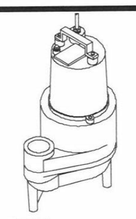

Series: EHV
0.5 HP 3450RPM, 60Hz

CSA 108 - File No. LR16567
UL 778

NRTLC

Description:
PUMP IS DESIGNED FOR HANDLING SEWAGE EFFLUENT IN TYPICAL SEPTIC TANK/EFFLUENT APPLICATIONS.

DISCHARGE: 2", (51mm) N.P.T. Female, Vertical.
LIQUID TEMPERATURE: 77°F (25°C) Continuous.
MOTOR HOUSING: Cast Iron
PUMP BODY: Cast Iron
IMPELLER: *Design:* Multi-Vane Vortex
Material: Cast Iron.
SHAFT: 420 Stainless Steel
O-RINGS: Buna-N
HARDWARE: 300 Series Stainless Steel
PAINT: Air Dry Enamel
CABLE ENTRY: 20 ft. (6M) Cord with Plug and Pressure Grommet for Sealing and Strain Relief.
SEAL: *Design:* Single Mechanical, Oil-Filled Reservoir.
Material: Rotating Faces - Ceramic
Stationary Faces - Carbon
Elastomer - Buna-N
Hardware - 300 Series Stainless
SPEED: 3450 RPM
UPPER BEARING: *Design:* Single Row, Ball
LOWER BEARING: *Design:* Single Row, Ball
MOTOR: *Design:* Oil-Filled.
Insulation: Class B.
SINGLE PHASE: Permanent Split Capacitor (PSC). Includes Overload Protection in Motor.
FLOAT: EHV412 None
EHV412A Wide Angle, Mechanical, 20ft (6M) Cable, Pipe Mounted.
EHV412VF Vertical Float, PVC, Snap Action.
EHV412AT Wide Angle, Mechanical, 20ft (6M) Cable, Pump Mounted.

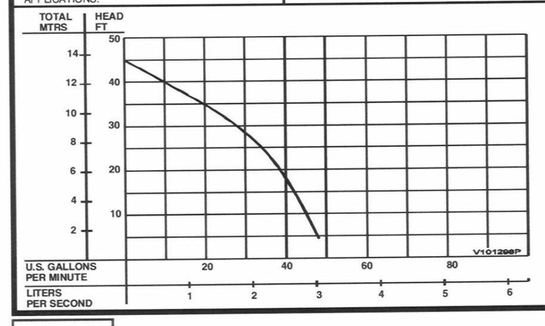

Testing is performed with water, specific gravity of 1.0 @ 68° F (20°C), other fluids may vary performance.

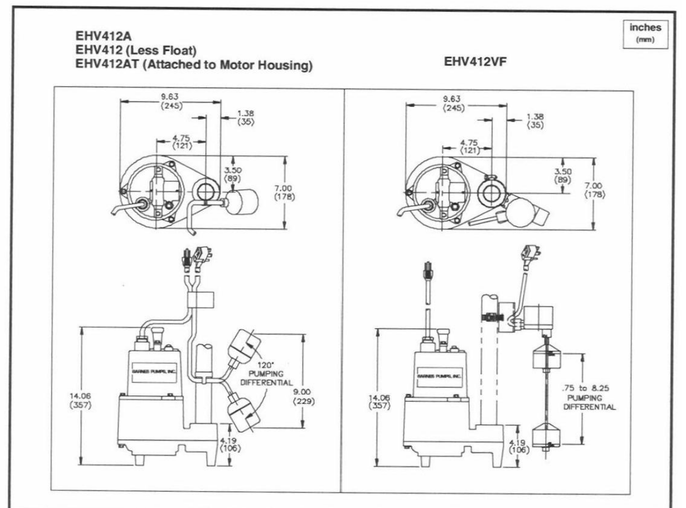

MODEL NO.	PART NO.	HP	VOLT	PH	RPM (NOM)	NEMA START CODE	FULL LOAD AMPS	CORD LENGTH	CORD SIZE	CORD TYPE
EHV412	101298	0.5	115	1	3450	H	6.40	20Ft. (6M)	14/3	SJTOW
EHV412A	103542	0.5	115	1	3450	H	6.40	20Ft. (6M)	14/3	SJTOW
EHV412VF	101300	0.5	115	1	3450	H	6.40	20Ft. (6M)	14/3	SJTOW
EHV412AT	103543	0.5	115	1	3450	H	6.40	20Ft. (6M)	14/3	SJTOW
EHV412	101298G	0.5	115	1	3450	H	6.40	30Ft. (9M)	14/3	SJTOW

CRANE A Crane Co. Company
PUMPS & SYSTEMS
1485 Lexington Ave. Mansfield, Ohio 44907-2674 Ph: (937) 778-8947 Fax: (419) 774-1530 www.barnespumps.com
420 Third Street/P.O. Box 603 Piqua, Ohio 45356-0603 Ph: (937) 778-8947 Fax: (937) 773-7157 www.cranepumps.com
83 West Drive Brampton, Ontario Canada L6T 2J6 Ph: (905) 457-6223 Fax: (905) 457-2650
Submersible Wastewater Pump Association SWPA MEMBER

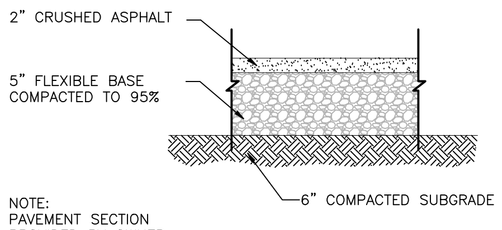

NOTE:
PAVEMENT SECTION PROVIDED BY OWNER.

CRUSHED ASPHALT PAVEMENT SECTION
N.T.S.

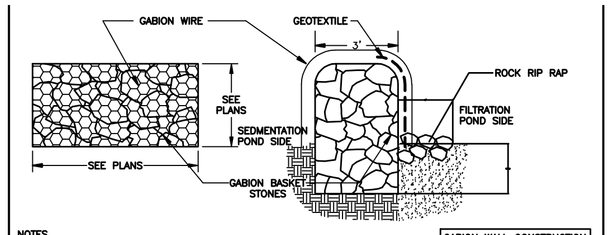

NOTES

1. GABION WIRE. GABION WIRE SHALL BE 12 GAGE PLASTIC COATED WIRE IN ACCORDANCE WITH COA STANDARD SPECIFICATION 594S.

2. GABION BASKET STONES. STONE FILL SHALL BE DURABLE AND OF SUITABLE QUALITY TO ENSURE PERMANENCE IN THE STRUCTURE. THE STONE USED TO FILL THE GABION BASKETS SHALL BE A CLEAN, SOUND AND DURABLE ROCK MEETING THE FOLLOWING REQUIREMENTS. IT SHALL HAVE A WEARING LOSS LESS THAN 35 PERCENT WHEN THE STONE IS TESTED WITH THE LOS ANGELES ABRASION MACHINE IN ACCORDANCE WITH ASTM TEST METHOD C535 (TXDOT TEST METHOD TEX-410A). THE LOSS OF MATERIAL EXPERIENCED DURING FIVE CYCLES OF MAGNESIUM SULFATE EXPOSURE CONDUCTED IN ACCORDANCE WITH TXDOT TEST METHOD TEX411A FOR ROCK RIP RAP SHALL NOT EXCEED 18 PERCENT.

GABION WALL CONSTRUCTION MUST MET CITY OF AUSTIN SPECIFICATION 594S

GABION DETAIL
N.T.S.

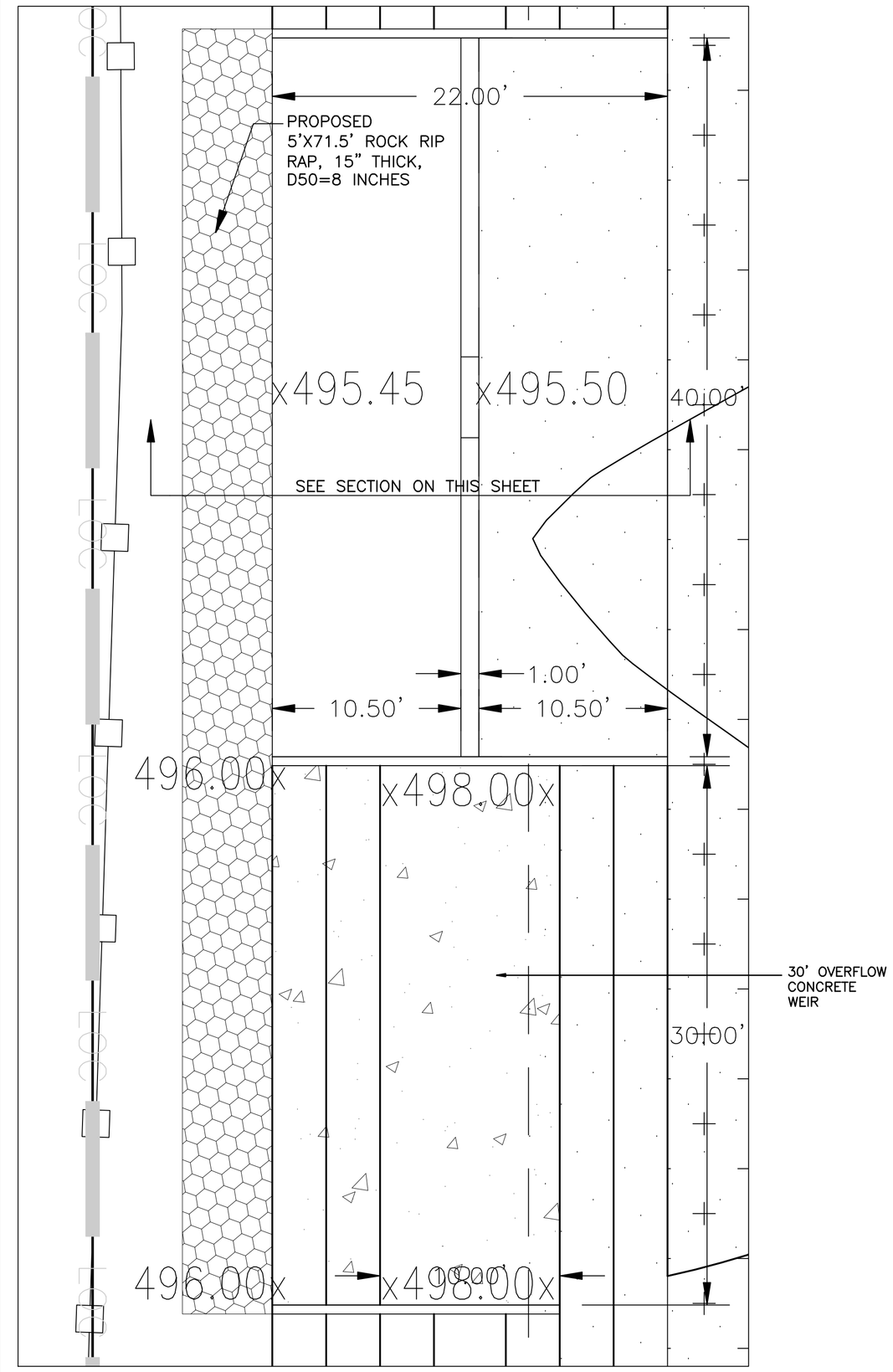

DETENTION POND OUTLET STRUCTURE PLAN VIEW
SCALE: 1"=5'-0"

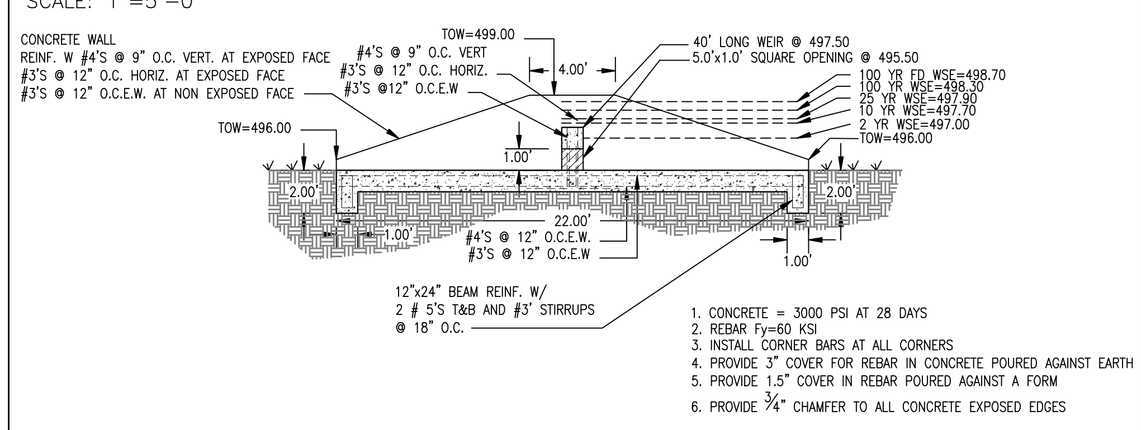

1. CONCRETE = 3000 PSI AT 28 DAYS
2. REBAR Fy=60 KSI
3. INSTALL CORNER BARS AT ALL CORNERS
4. PROVIDE 3" COVER FOR REBAR IN CONCRETE POURED AGAINST EARTH
5. PROVIDE 1.5" COVER IN REBAR POURED AGAINST A FORM
6. PROVIDE 3/4" CHAMFER TO ALL CONCRETE EXPOSED EDGES

DETENTION POND OUTLET SECTION DETAIL
SCALE: 1"=5'-0"

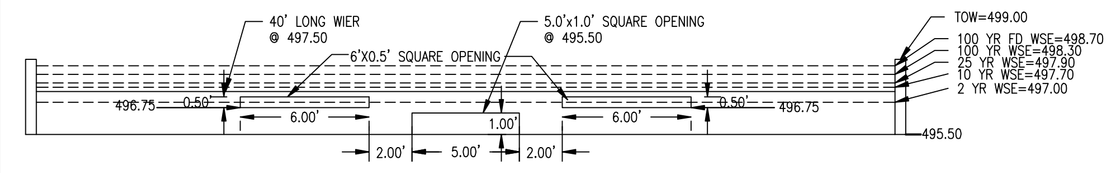

DETENTION POND OUTLET STRUCTURE ELEVATION
SCALE: 1"=5'-0"

CATCH BASIN

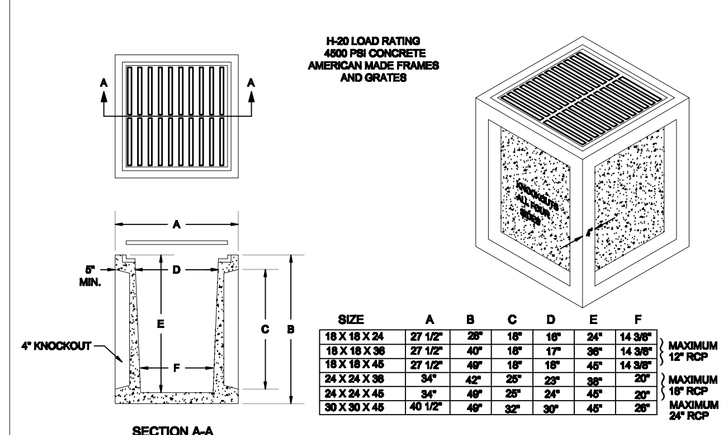

SIZE	A	B	C	D	E	F	
18 X 18 X 24	27 1/2"	28"	18"	16"	24"	14 3/8"	MAXIMUM 12" RCP
18 X 18 X 36	27 1/2"	40"	18"	17"	36"	14 3/8"	
18 X 18 X 45	27 1/2"	49"	18"	18"	45"	14 3/8"	
24 X 24 X 36	34"	42"	25"	23"	36"	20"	MAXIMUM 18" RCP
24 X 24 X 45	34"	49"	25"	24"	45"	20"	
30 X 30 X 45	40 1/2"	49"	32"	30"	45"	26"	MAXIMUM 24" RCP

NOTE: VARIABLE HEIGHT EXTENSIONS AVAILABLE

HILL COUNTRY CONCRETE PRODUCTS INC. P.O. BOX 357 Kyle, Tx 78640 (512) 268-9711
DATE: 9/5/08 DRAWING NAME: RCCP-01 Austin Phone (512) 476-5838

36"x36" CATCH BASINS
WITH INTERLOCKING EXTENSIONS

STANDARD FEATURES
6" WALLS AND FLOOR
REINFORCED FOR H-20 LOADING WITH GRADE 60 REBAR
4500 PSI CONCRETE
KNOCKOUTS IN ALL SIDES FOR UP TO 27" RCP
2" LIFT HOLES IN BASIN AND EXTENSIONS
GALVANIZED STEEL HEAVY DUTY GRATE

WEIGHTS
BASE 4900 LBS.
EXTENSION 1100 LBS.

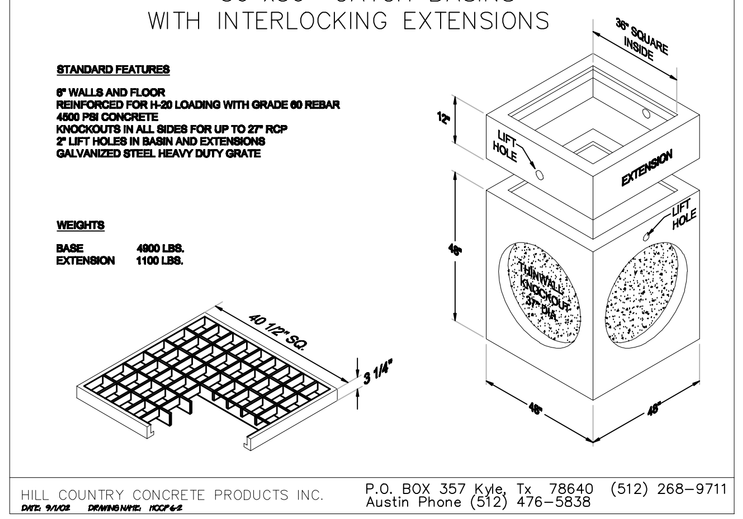

HILL COUNTRY CONCRETE PRODUCTS INC. P.O. BOX 357 Kyle, Tx 78640 (512) 268-9711
DATE: 9/5/08 DRAWING NAME: RCCP-04 Austin Phone (512) 476-5838

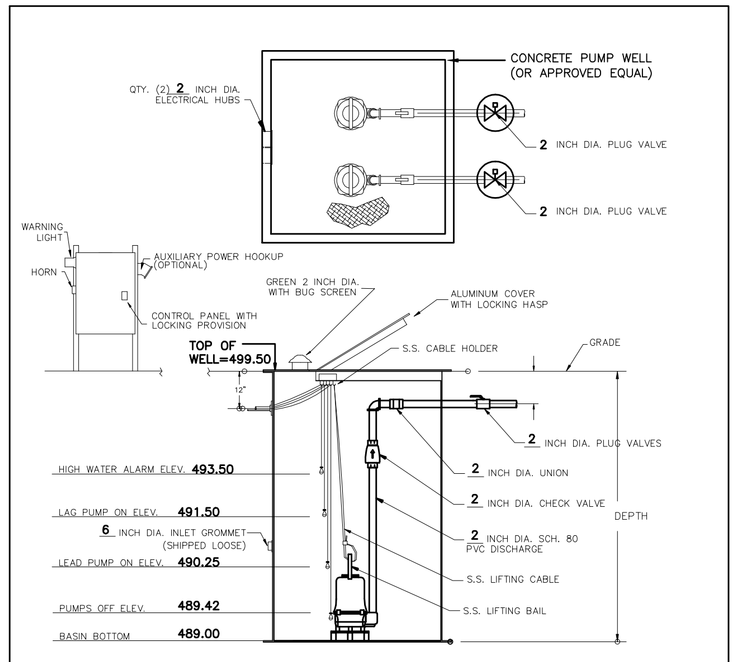

NOTE: PROVIDE AUDIO AND VISUAL ALARM AS PER MANUFACTURER RECOMMENDATIONS. WET WELL AND PUMPS MUST BE INSTALLED PER MANUFATURER'S RECOMMENDATIONS.

PUMP SPECIFICATIONS	
PUMPS REQUIRED	2
MANUFACTURER (OR APPROVED EQUAL)	HYDROMATIC

DUAL PUMP SYSTEM

SP-2013-0480D

STATE OF TEXAS MAURICIO QUINTERO-RANGEL 94975 LICENSED PROFESSIONAL ENGINEER
10-17-2014

MAURICIO QUINTERO-RANGEL, P.E.
F-12164
11312 ROBERT WOODING DR.
AUSTIN, TEXAS 78748
(512) 659-4386 TEL.
(512) 291-8714 FAX

GENERAL DETAILS I

BURCH STORAGES
4300 BURCH DRIVE
DEL VALLE, TEXAS 78617

NO.	REVISION/CORRECTION	BY	DATE

DATE: 11-14-2014
FILE: 37-BURCH-ND...
DRAWN: MQR
SHEET 7 OF 10