REFER C5.01 TO C5.04 FOR DETAILS

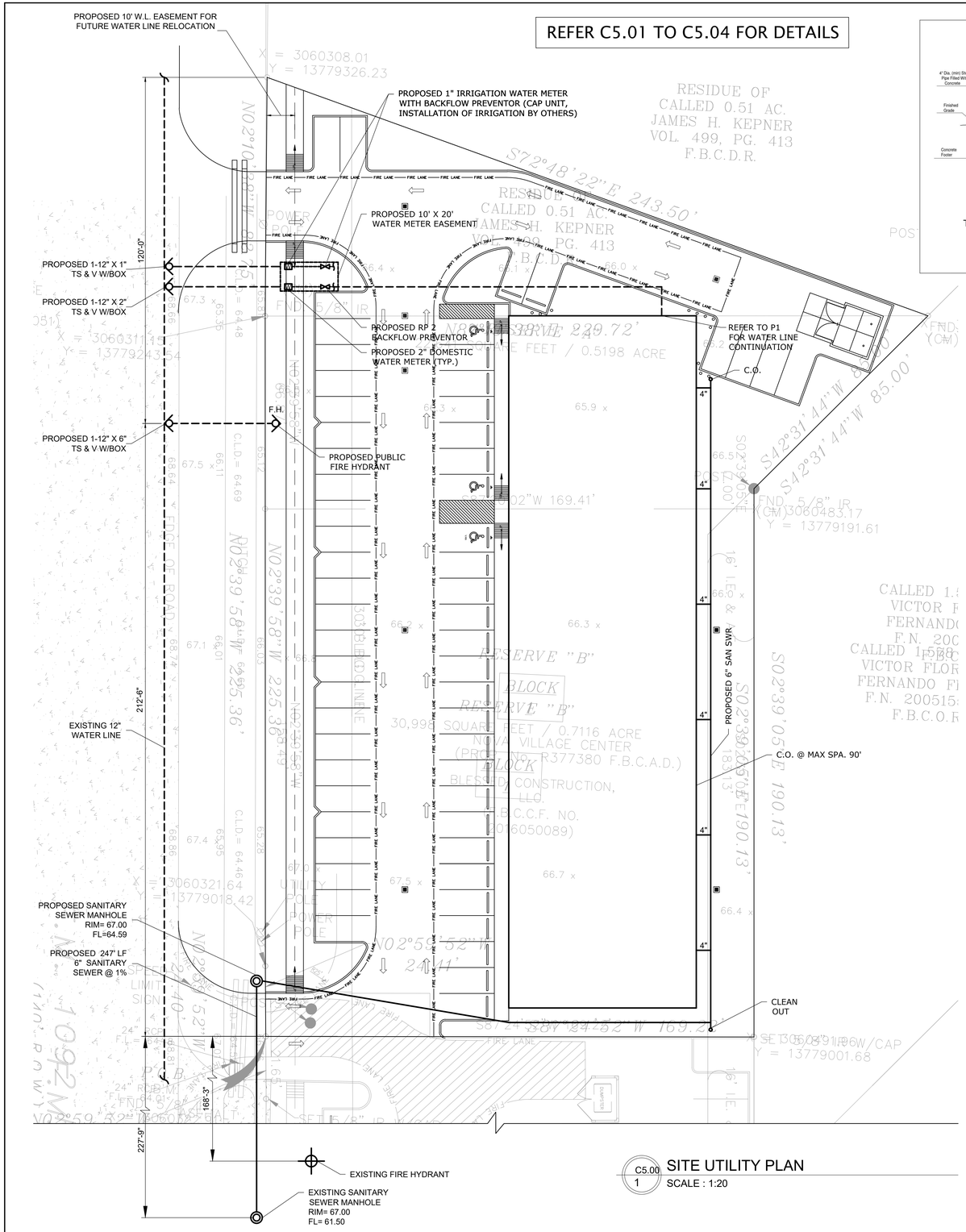

C5.00 1 SITE UTILITY PLAN
SCALE : 1:20

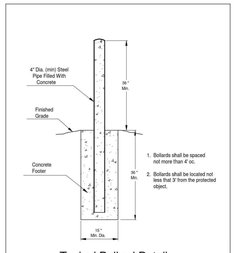

Typical Bollard Detail

Scale: 3/4" = 1'-0"

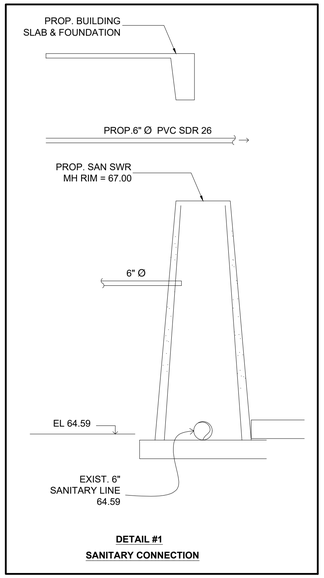

DETAIL #1

SANITARY CONNECTION

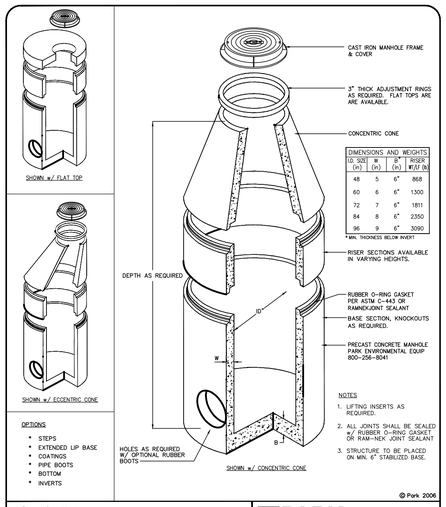

DIMENSIONS AND WEIGHTS			
I.D. SIZE (in)	W (in)	B* (in)	RISER WGT (lb)
48	5	6"	868
60	6	6"	1300
72	7	6"	1811
84	8	6"	2350
96	9	6"	3090

* MIN. THICKNESS BELOW INVERT

NOTES

1. LIFTING INSERTS AS REQUIRED.
2. ALL JOINTS SHALL BE SEALED w/ RUBBER O-RING GASKET OR RAM-NEK JOINT SEALANT
3. STRUCTURE TO BE PLACED ON MIN. 6" STABILIZED BASE.

OPTIONS

- STEPS
- EXTENDED LIP BASE
- COATINGS
- PIPE BOOTS
- BOTTOM
- INVERTS

Specifications

CONCRETE : Class 1 concrete with of design strength of 4500 PSI at 28 days. Rated for H-20 loading.

REINFORCEMENT: Structural reinforcement conforming to ASTM-C-478.

C.I. CASTINGS: Cast iron frames and grates are manufactured of grey cast iron conforming to ASTM A48-76 Class 30.

PARK ENVIROMENTAL EQUIPMENT 888-611-PARK www.park-USA.com

"Expect the Best"

PRECAST CONCRETE MANHOLE FOR STORM SEWER

SCALE	DWG. NO.	REV.
NONE	PCMHST-1	A
DATE 10/06		

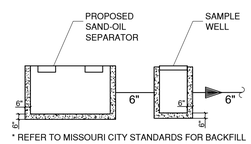

* REFER TO MISSOURI CITY STANDARDS FOR BACKFILL

CONSTRUCTION NOTE

ALL SANITARY SEWER AND WATER (UTILITY) WORK IN THE TxDOT R.O.W. MUST BE APPROVED BY ITS PERSPECTIVE DEPARTMENTS.
NO WORK IN TxDOT R.O.W. SHALL BE PREFORMED WITHOUT OBTAINING THE REQUISITE PERMIT FROM TxDOT.

CONSTRUCTION NOTE

THE LOCATIONS OF EXISTING UTILITIES SHOWN ON THESE PLANS ARE APPROXIMATE.
THE GENERAL CONTRACTOR SHALL ACCEPT THE RESPOSIBILITY TO NOTIFY ALL UTILITY, CITY AND COMMUNICATION COMPANIES TO PROVIDE DEPTH AND LOCATIONS OF ALL UNDERGROUND PIPE. CONTRACTOR SHALL INFORM ENGINEER OF ANY DISCREPANCIES THAT MAY IMPACT WORK DESCRIBED HEREIN.

NOTE

ALL DOMESTIC AND IRRIGATION SERVICE TAPS 2" AND UNDER ARE PROVIDED AND INSTALLED BY DISTRICT. (TAPS WILL BE LONG TAPS CONNECTED TO EXISTING WATER LINE LOCATED ON WEST SIDE OF FM 1029)
ALL BACKFLOW PREVENTER FOR NEW BUILDING SHALL BE TESTED AND CERTIFICATION OF INSTALLATION PROVIDED PRIOR TO FINAL ACCEPTANCE OF THE PROJECT.

1. ALL TAPS AND METERS SHALL BE INSPECTED BY QUAIL VALLEY UTILITY DISTRICT. CONTACT 281-499-5539.
2. A PRECONSTRUCTION MEETING IS REQUIRED BY DISTRICT PRIOR TO START OF PROJECT. PLEASE CALL 281-499-5539.
3. ALL BUILDING EXTERIOR UTILITIES ARE REQUIRED TO BE INSPECTED BY DISTRICT.PLEASE CALL 281-499-5539,24 HOURS IN ADVANCE TO ARRANGE FOR INSPECTIONS.
4. ALL BACKFLOW PREVENTERS ARE REQUIRED TO BE TESTED AND CERTIFIED PRIOR TO FINAL ACCEPTANCE OF THE PROJECT.
5. ALL SAMPLING WELL SHALL BE EQUIPPED WITH AN 8" DROP BETWEEN INLET AND OUTLET PIPE.
6. CLEAN-OUTS LOCATED WITHIN PAVEMENT AREAS SHALL BE EQUIPPED WITH TRAFFIC RATED COVERS.

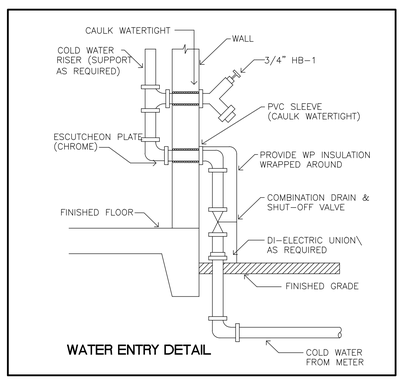

WATER ENTRY DETAIL

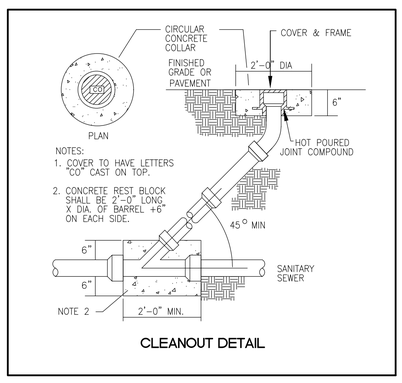

CLEANOUT DETAIL

W E S

10/03/2023

Zaine Shoping Center
1911 FM 1092,
Missouri City, TX 77477

SITE UTILITY PLAN

14022 HEMPSTEAD RD.
HOUSTON, TX 77040
TEL: (713) 999-1919
FAX: (281) 667-3505
info@paragansolutions.com

THIS DRAWING IS THE EXCLUSIVE PROPERTY OF PARAGAN SOLUTIONS, LLC.
IT IS NOT TO BE REPRODUCED, COPIED OR ALTERED, IN WHOLE OR ANY PART. THIS DRAWING IS NOT TO BE USED FOR ANY PURPOSE WITHOUT THE WRITTEN APPROVAL OF PARAGAN SOLUTIONS, LLC.
THIS DRAWING MAY NOT BE REUSED OR TRANSFERRED TO ANY OTHER CONSULTING OR ARCHITECTURAL FIRMS WITHOUT THE WRITTEN CONSENT OF PARAGAN SOLUTIONS, LLC.

REV.	DATE	DESCRIPTION

DRAWN	DESIGN	JOB NUMBER
AAA	LK	2323
DATE		SHEET NO.
OCT 2023		C5.00
SCALE		
1:20		