BELLFLOWER BUSINESS PARK
9737 Somerset Blvd, Bellflower, CA 90706
For further information: (714) 997-7956

Features:
* Approximately 1,850 S.F
* Glass storefront, corner unit
* Rooftop A/C
* Frontage on Somerset Blvd
* Gated parking in the rear

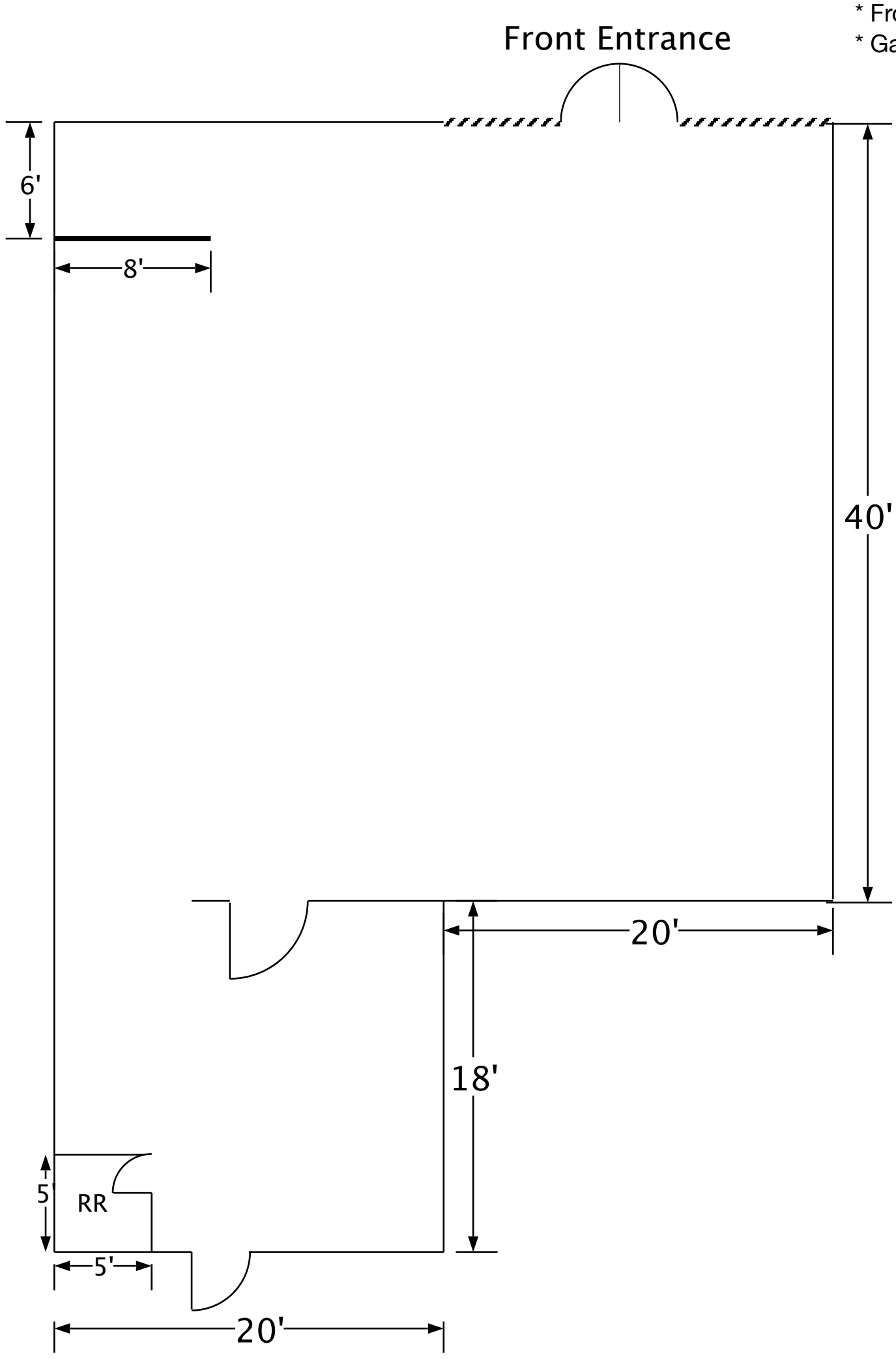

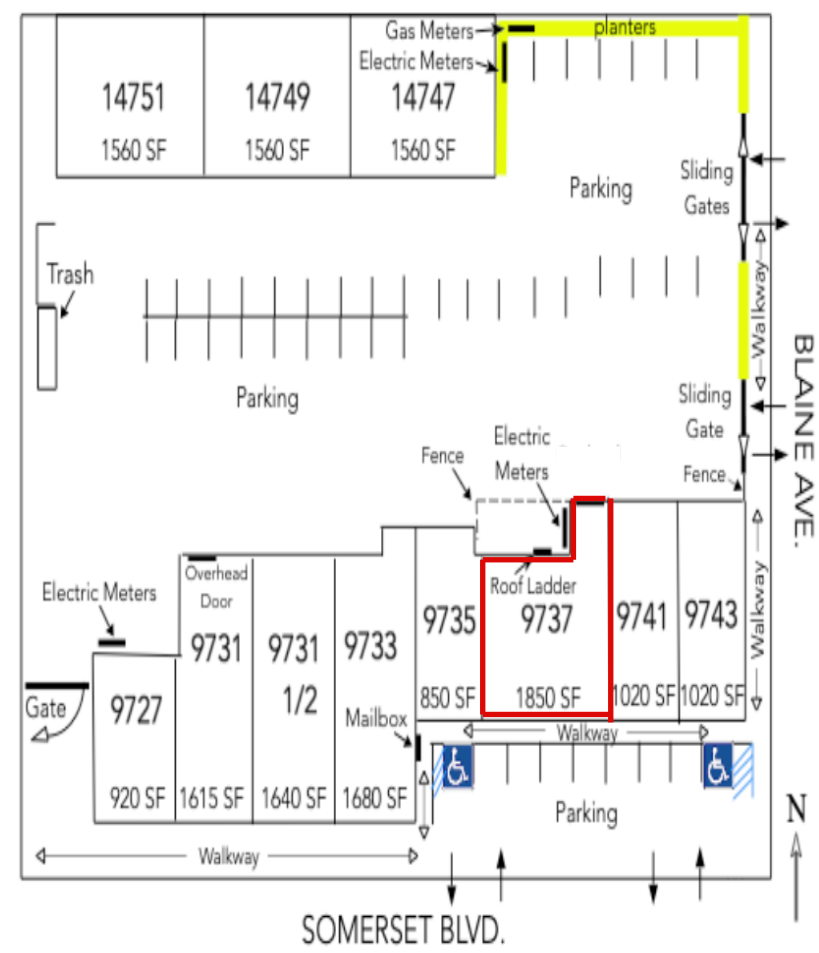

Visit our website:
sdassociatesproperties.com